CALL NO. 300

CONTRACT ID. 151005

MUHLENBERG COUNTY

FED/STATE PROJECT NUMBER FD04 089 9001 054-059

DESCRIPTION WESTERN KENTUCKY PARKWAY(PW-9001)

WORK TYPE ASPHALT REHAB INTERSTATE/PARKWAY

PRIMARY COMPLETION DATE 7/31/2015

LETTING DATE: February 20,2015

Sealed Bids will be received electronically through the Bid Express bidding service until 10:00 AM EASTERN STANDARD TIME February 20,2015. Bids will be publicly announced at 10:00 AM EASTERN STANDARD TIME.

NO PLANS ASSOCIATED WITH THIS PROJECT.

REQUIRED BID PROPOSAL GUARANTY: Not less than 5% of the total bid.

TABLE OF CONTENTS

PART I SCOPE OF WORK

- PROJECT(S), COMPLETION DATE(S), & LIQUIDATED DAMAGES
- CONTRACT NOTES
- STATE CONTRACT NOTES
- ASPHALT MIXTURE
- DGA BASE
- DGA BASE FOR SHOULDERS
- INCIDENTAL SURFACING
- SPECIAL NOTE(S) APPLICABLE TO PROJECT
- RIGHT OF WAY NOTES
- UTILITY CLEARANCE

PART II SPECIFICATIONS AND STANDARD DRAWINGS

- SPECIFICATIONS REFERENCE
- SUPPLEMENTAL SPECIFICATION

PART III EMPLOYMENT, WAGE AND RECORD REQUIREMENTS

- LABOR AND WAGE REQUIREMENTS
- EXECUTIVE BRANCH CODE OF ETHICS
- KENTUCKY EQUAL EMPLOYMENT OPPORTUNITY ACT OF 1978 LOCALITY 1,2,3,4 / STATE (OVER 250,000)
- PROJECT WAGE RATES LOCALITY 1 / FEDERAL & STATE

PART IV INSURANCE

PART V BID ITEMS

PART I

SCOPE OF WORK

ADMINISTRATIVE DISTRICT - 02

CONTRACT ID - 151005

FD04 089 9001 054-059

COUNTY - MUHLENBERG

PCN - DE08990011505
FD04 089 9001 054-059

WESTERN KENTUCKY PARKWAY(PW-9001) MILL AND THIN ASPHALT OVERLAY ON WESTERN KENTUCKY PARKWAY FROM MP 54.285 TO MP 59.920.ASPHALT REHAB INTERSTATE/PARKWAY SYP NO. 02-02077.00.

GEOGRAPHIC COORDINATES LATITUDE 37:13:00.00 LONGITUDE 87:10:00.00

COMPLETION DATE(S):

COMPLETED BY 07/31/2015 APPLIES TO ENTIRE CONTRACT

CONTRACT NOTES

PROPOSAL ADDENDA

All addenda to this proposal must be applied when calculating bid and certified in the bid packet submitted to the Kentucky Department of Highways. Failure to use the correct and most recent addenda may result in the bid being rejected.

BID SUBMITTAL

Bidder must use the Department's Expedite Bidding Program available on the Internet web site of the Department of Highways, Division of Construction Procurement. (www.transportation.ky.gov/construction-procurement)

The Bidder must download the bid file located on the Bid Express website (www.bidx.com) to prepare a bid packet for submission to the Department. The bidder must submit electronically using Bid Express.

JOINT VENTURE BIDDING

Joint venture bidding is permissible. All companies in the joint venture must be prequalified in one of the work types in the Qualifications for Bidders for the project. The bidders must get a vendor ID for the joint venture from the Division of Construction Procurement and register the joint venture as a bidder on the project. Also, the joint venture must obtain a digital ID from Bid Express to submit a bid. A joint bid bond of 5% may be submitted for both companies or each company may submit a separate bond of 5%.

UNDERGROUND FACILITY DAMAGE PROTECTION

The contractor is advised that the Underground Facility Damage Protection Act of 1994, became law January 1, 1995. It is the contractor's responsibility to determine the impact of the act regarding this project, and take all steps necessary to be in compliance with the provision of the act.

SPECIAL NOTE FOR PIPE INSPECTION

Contrary to Section 701.03.08 of the 2012 Standard Specifications for Road and Bridge Construction and Kentucky Method 64-114, certification by the Kentucky Transportation Center for prequalified Contractors to perform laser/video inspection is not required on this contract. It will continue to be a requirement for the Contractor performing any laser/video pipe inspection to be prequalified for this specialized item with the Kentucky Transportation Cabinet-Division of Construction Procurement.

SPECIAL NOTE FOR COMPOSITE OFFSET BLOCKS

Contrary to the Standard Drawings (2012 edition) the Cabinet will allow 6" composite offset blocks in lieu of wooden offset blocks, except as specified on proprietary end treatments and crash cushions. The composite blocks shall be selected from the Cabinet's List of Approved Materials.

REGISTRATION WITH THE SECRETARY OF STATE BY A FOREIGN ENTITY

Pursuant to KRS 176.085(1)(b), an agency, department, office, or political subdivision of the Commonwealth of Kentucky shall not award a state contract to a person that is a foreign entity required by KRS 14A.9-010 to obtain a certificate of authority to transact business in the Commonwealth ("certificate") from the Secretary of State under KRS 14A.9-030 unless the person produces the certificate within fourteen (14) days of the bid or proposal opening. If the foreign entity is not required to obtain a certificate as provided in KRS 14A.9-010, the foreign entity should identify the applicable exception. Foreign entity is defined within KRS 14A.1-070.

For all foreign entities required to obtain a certificate of authority to transact business in the Commonwealth, if a copy of the certificate is not received by the contracting agency within the time frame identified above, the foreign entity's solicitation response shall be deemed non-responsive or the awarded contract shall be cancelled.

Businesses can register with the Secretary of State at https://secure.kentucky.gov/sos/ftbr/welcome.aspx .

SPECIAL NOTE FOR PROJECT QUESTIONS DURING ADVERTISEMENT

Questions about projects during the advertisement should be submitted in writing to the Division of Construction Procurement. This may be done by fax (502) 564-7299 or email to kytc.projectquestions@ky.gov. The Department will attempt to answer all submitted questions. The Department reserves the right not to answer if the question is not pertinent or does not aid in clarifying the project intent.

The deadline for posting answers will be 3:00 pm Eastern Daylight Time, the day preceding the Letting. Questions may be submitted until this deadline with the understanding that the later a question is submitted, the less likely an answer will be able to be provided.

The questions and answers will be posted for each Letting under the heading "Questions & Answers" on the Construction Procurement website (www.transportation.ky.gov/contract). The answers provided shall be considered part of

this Special Note and, in case of a discrepancy, will govern over all other bidding documents.

HARDWOOD REMOVAL RESTRICTIONS

The US Department of Agriculture has imposed a quarantine in Kentucky and several surrounding states, to prevent the spread of an invasive insect, the emerald ash borer. Hardwood cut in conjunction with the project may not be removed from the state. Chipping or burning on site is the preferred method of disposal.

INSTRUCTIONS FOR EXCESS MATERIAL SITES AND BORROW SITES

Identification of excess material sites and borrow sites shall be the responsibility of the Contractor. The Contractor shall be responsible for compliance with all applicable state and federal laws and may wish to consult with the US Fish and Wildlife Service to seek protection under Section 10 of the Endangered Species Act for these activities.

ACCESS TO RECORDS

The contractor, as defined in KRS 45A.030 (9) agrees that the contracting agency, the Finance and Administration Cabinet, the Auditor of Public Accounts, and the Legislative Research Commission, or their duly authorized representatives, shall have access to any books, documents, papers, records, or other evidence, which are directly pertinent to this contract for the purpose of financial audit or program review. Records and other prequalification information confidentially disclosed as part of the bid process shall not be deemed as directly pertinent to the contract and shall be exempt from disclosure as provided in KRS 61.878(1)(c). The contractor also recognizes that any books, documents, papers, records, or other evidence, received during a financial audit or program review shall be subject to the Kentucky Open Records Act, KRS 61.870 to 61.884.

In the event of a dispute between the contractor and the contracting agency, Attorney General, or the Auditor of Public Accounts over documents that are eligible for production and review, the Finance and Administration Cabinet shall review the dispute and issue a determination, in accordance with Secretary's Order 11-004. (See attachment)

10/29/12

Commonwealth of Kentucky
Finance and Administration Cabinet
OFFICE OF THE SECRETARY
Room 383, Capitol Annex
702 Capital Avenue
Frankfort, KY 40601-3462
(502) 564-4240
Fax (502) 564-6785

Steven L. Beshear
Governor

Lori H. Flanery
Secretary

SECRETARY'S ORDER 11-004

FINANCE AND ADMINISTRATION CABINET

Vendor Document Disclosure

WHEREAS, in order to promote accountability and transparency in governmental operations, the Finance and Administration Cabinet believes that a mechanism should be created which would provide for review and assistance to an Executive Branch agency if said agency cannot obtain access to documents that it deems necessary to conduct a review of the records of a private vendor that holds a contract to provide goods and/or services to the Commonwealth; and

WHEREAS, in order to promote accountability and transparency in governmental operations, the Finance and Administration Cabinet believes that a mechanism should be created which would provide for review and assistance to an Executive Branch agency if said agency cannot obtain access to documents that it deems necessary during the course of an audit, investigation or any other inquiry by an Executive Branch agency that involves the review of documents; and

WHEREAS, KRS 42.014 and KRS 12.270 authorizes the Secretary of the Finance and Administration Cabinet to establish the internal organization and assignment of functions which are not established by statute relating to the Finance and Administration Cabinet; further, KRS Chapter 45A.050 and 45A.230 authorizes the Secretary of the Finance and Administration Cabinet to procure, manage and control all supplies and services that are procured by the Commonwealth and to intervene in controversies among vendors and state agencies; and

NOW, THEREFORE, pursuant to the authority vested in me by KRS 42.014, KRS 12.270, KRS 45A.050, and 45A.230, I, Lori H. Flanery, Secretary of the Finance and Administration Cabinet, do hereby order and direct the following:

I. Upon the request of an Executive Branch agency, the Finance and Administration Cabinet ("FAC") shall formally review any dispute arising where the agency has requested documents from a private vendor that holds a state contract and the vendor has refused access to said documents under a claim that said documents are not directly pertinent or relevant to the agency's inquiry upon which the document request was predicated.

II. Upon the request of an Executive Branch agency, the FAC shall formally review any situation where the agency has requested documents that the agency deems necessary to

conduct audits, investigations or any other formal inquiry where a dispute has arisen as to what documents are necessary to conclude the inquiry.

III. Upon receipt of a request by a state agency pursuant to Sections I & II, the FAC shall consider the request from the Executive Branch agency and the position of the vendor or party opposing the disclosure of the documents, applying any and all relevant law to the facts and circumstances of the matter in controversy. After FAC's review is complete, FAC shall issue a Determination which sets out FAC's position as to what documents and/or records, if any, should be disclosed to the requesting agency. The Determination shall be issued within 30 days of receipt of the request from the agency. This time period may be extended for good cause.

IV. If the Determination concludes that documents are being wrongfully withheld by the private vendor or other party opposing the disclosure from the state agency, the private vendor shall immediately comply with the FAC's Determination. Should the private vendor or other party refuse to comply with FAC's Determination, then the FAC, in concert with the requesting agency, shall effectuate any and all options that it possesses to obtain the documents in question, including, but not limited to, jointly initiating an action in the appropriate court for relief.

V. Any provisions of any prior Order that conflicts with the provisions of this Order shall be deemed null and void.

SPECIAL NOTE FOR RECIPROCAL PREFERENCE

Reciprocal preference to be given by public agencies to resident bidders

By reference, KRS 45A.490 to 45A.494 are incorporated herein and in compliance regarding the bidders residency. Bidders who want to claim resident bidder status should complete the Affidavit for Claiming Resident Bidder Status along with their bid in the Expedite Bidding Program. Submittal of the Affidavit should be done along with the bid in Bid Express.

ASPHALT MIXTURE

Unless otherwise noted, the Department estimates the rate of application for all asphalt mixtures to be 110 lbs/sy per inch of depth.

DGA BASE

Unless otherwise noted, the Department estimates the rate of application for DGA Base to be 115 lbs/sy per inch of depth.

DGA BASE FOR SHOULDERS

Unless otherwise noted, the Department estimates the rate of application for DGA Base for Shoulders to be 115 lbs/sy per inch of depth. The Department will not measure necessary grading and/or shaping of existing shoulders prior to placing of DGA Base, but shall be incidental to the Contract unit price per ton for DGA Base.

Accept payment at the Contract unit price per ton as full compensation for all labor, materials, equipment, and incidentals for grading and/or shaping of existing shoulders and furnishing, placing, and compacting the DGA Base.

INCIDENTAL SURFACING

The Department has included in the quantities of asphalt mixtures established in the proposal estimated quantities required for resurfacing or surfacing mailbox turnouts, farm field entrances, residential and commercial entrances, curve widening, ramp gores and tapers, and road and street approaches, as applicable. Pave these areas to the limits as shown on Standard Drawing RPM-110-06 or as directed by the Engineer. In the event signal detectors are present in the intersecting streets or roads, pave the crossroads to the right of way limit or back of the signal detector, whichever is the farthest back of the mainline. Surface or resurface these areas as directed by the Engineer. The Department will not measure placing and compacting for separate payment but shall be incidental to the Contract unit price for the asphalt mixtures.

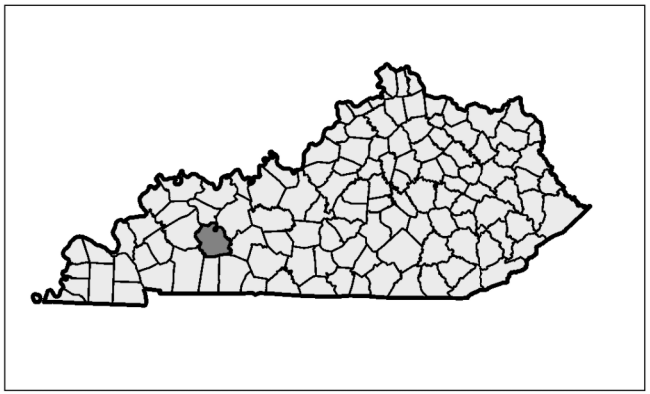

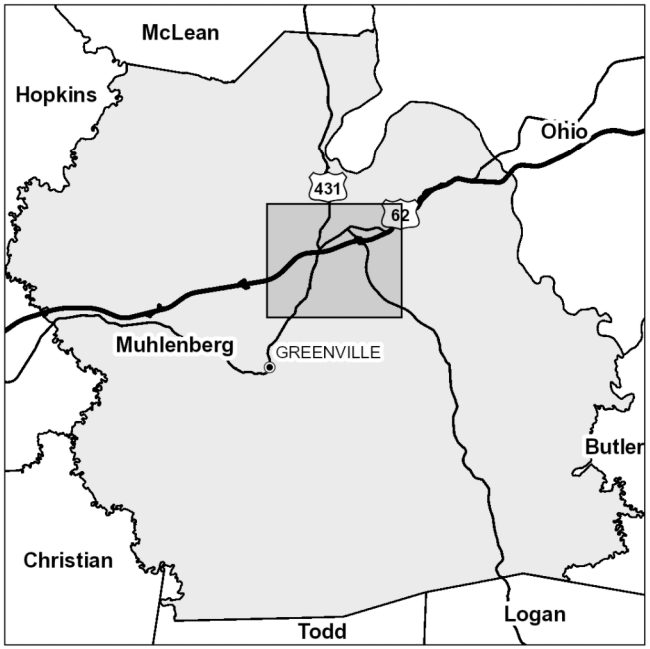

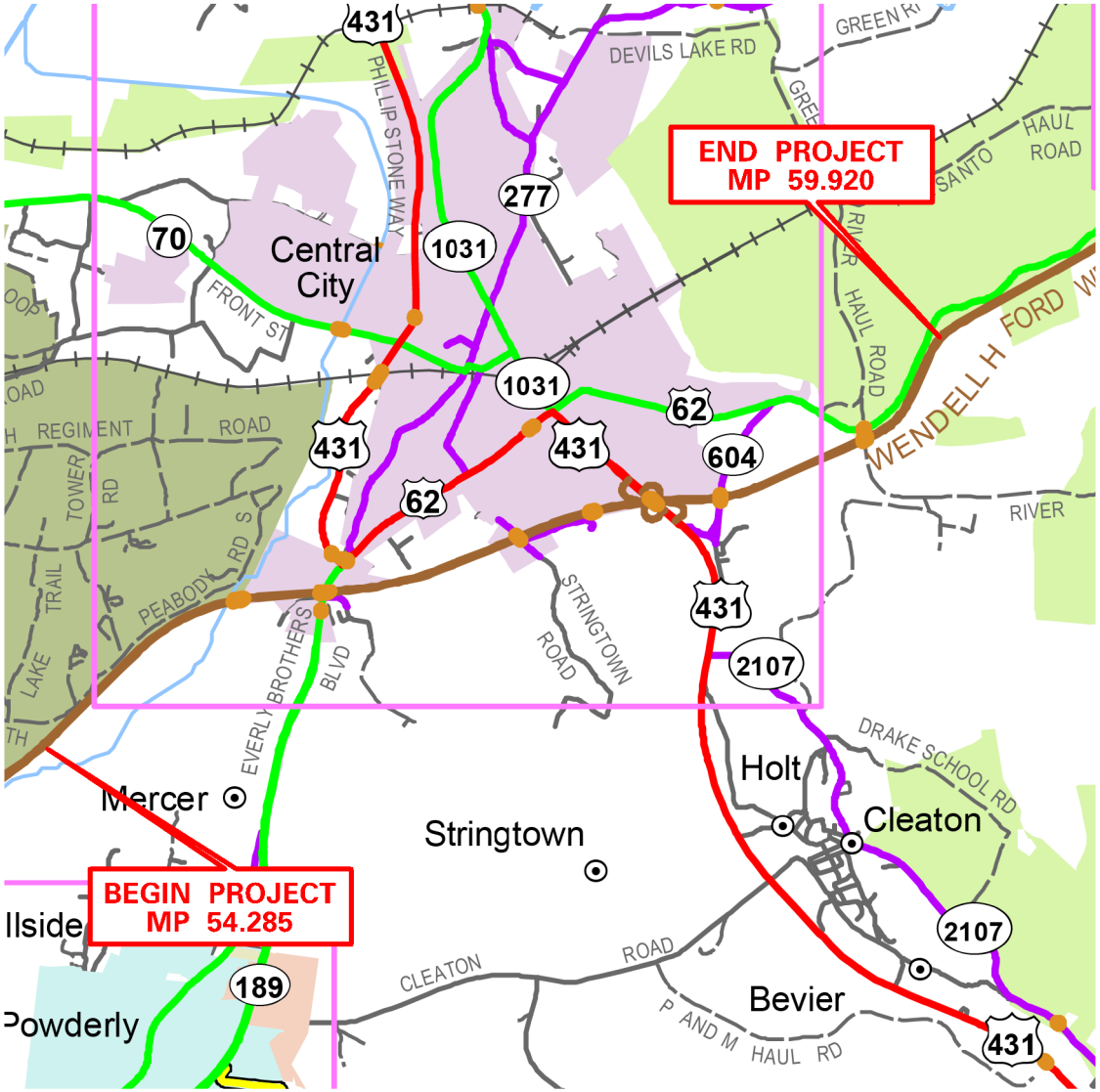

CONSTRUCTION NUMBER: FD04 089 9001 054–059

ITEM NUMBER: 2–2077 **LETTING DATE:** _____

RECOMMENDED BY: _____ **DATE:** _____
Project Manager

PLAN APPROVED BY: _____ **DATE:** _____
State Highway Engineer

FHWA APPROVED BY: _____ **DATE:** _____

HMB PROFESSIONAL ENGINEERS, INC
3 HMB Circle, U.S. 460
Frankfort, KY 40601
502-692-9800

COUNTY OF	ITEM NO.	SHEET NO.
MUHLENBERG	2-2077	

TYPICAL SECTIONS

MAINLINE

M.P. 54.285 to M.P. 59.92

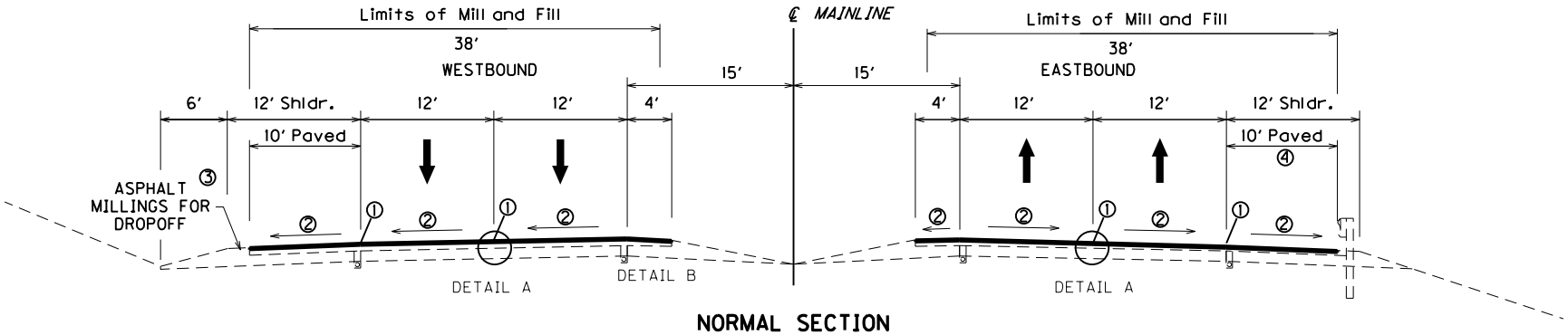

NORMAL SECTION

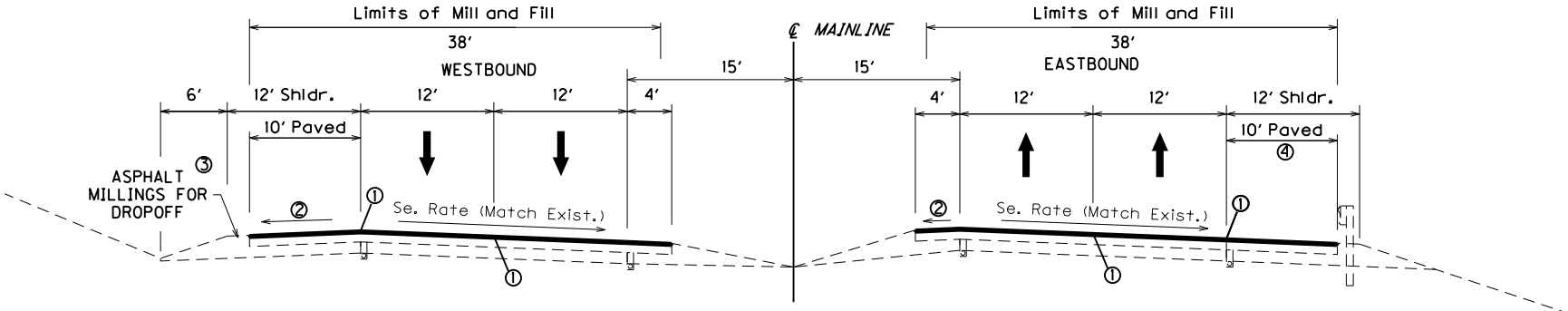

SUPERELEVATED SECTION

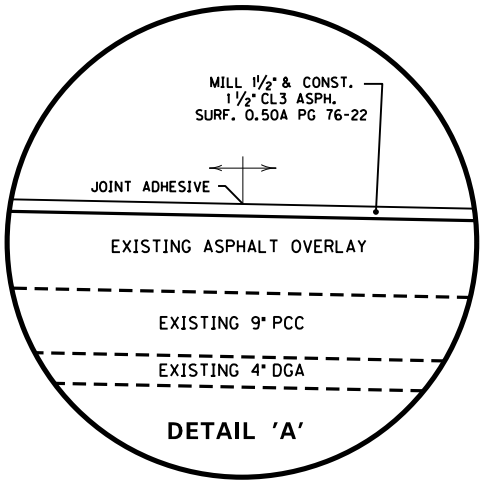

SURFACING SCHEDULE

MAINLINE TRAFFIC LANES & INSIDE SHOULDERS

ASPHALT PAVE MILLING & TEXTURING ..... 1 ½" DEPTH
CLASS 3 ASPH. SURF. 0.50A PG76-22 ..... 1 ½" DEPTH

OUTSIDE SHOULDERS

ASPHALT PAVE MILLING & TEXTURING ..... 1 ½" DEPTH
CLASS 2 ASPH. SURF. 0.50D PG64-22 ..... 1 ½" DEPTH
DGA WEDGE FOR DROPOFF ..... 3" DEPTH

③ ASPHALT SEAL FROM OUTSIDE EDGE OF PAVED SHOULDER TO A POINT 2 FOOT DOWN THE DITCH OR FILL SLOPE FOR PAVEMENT DROP-OFF AREAS REQUIRING DGA.

TWO APPLICATIONS OF THE FOLLOWING :
ASPHALT SEAL COAT..... 2.4 lbs. / S.Y.
ASPHALT SEAL AGGREGATE ..... 20 lbs. / S.Y.

① *JOINT ADHESIVE*

② *MATCH EXISTING SLOPE*

④ *REDUCE MILLING & RESURFACING TO 9' WHERE GUARDRAIL AND/OR WEDGE CURB IS PRESENT.*

NOT TO SCALE

TYPICAL SECTIONS
W.K.P. KY 9001

COUNTY OF	ITEM NO.	SHEET NO.
MUHLENBERG	2-2077	

TYPICAL SECTIONS
RAMPS A, B, C, & D
US 431 INTERCHANGE

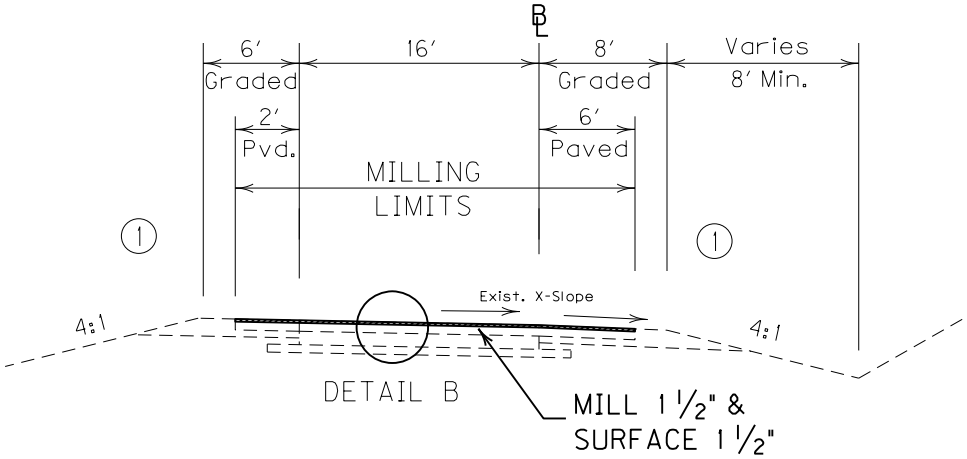

NORMAL SECTION

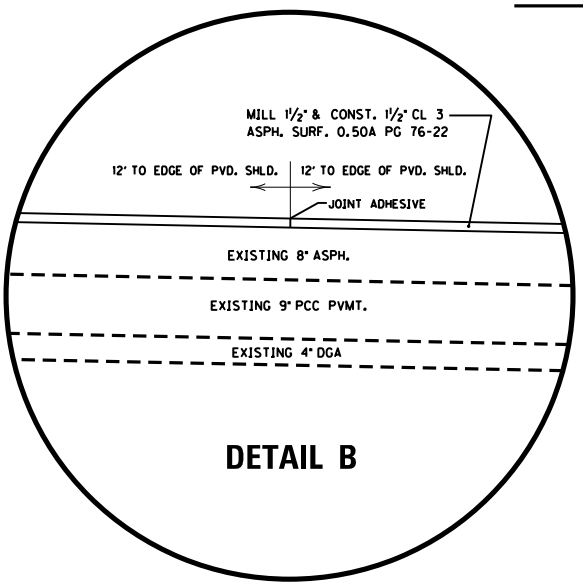

SURFACING SCHEDULE

MAINLINE TRAFFIC LANES & SHOULDERS

ASPH. PAVE MILLING & TEXTURING ..... 1½" DEPTH
CLASS 3 ASPH. SURF. 0.50A PG76-22.....1½" DEPTH

(1) ASPHALT SEAL FROM OUTSIDE EDGE OF PAVED SHOULDER TO A POINT 2 FOOT DOWN THE DITCH OR FILL SLOPE FOR PAVEMENT DROP-OFF AREAS REQUIRING DGA.

TWO APPLICATIONS OF THE FOLLOWING :
ASPHALT SEAL COAT..... 2.4 lbs. / S.Y.
ASPHALT SEAL AGGREGATE ..... 20 lbs. / S.Y.

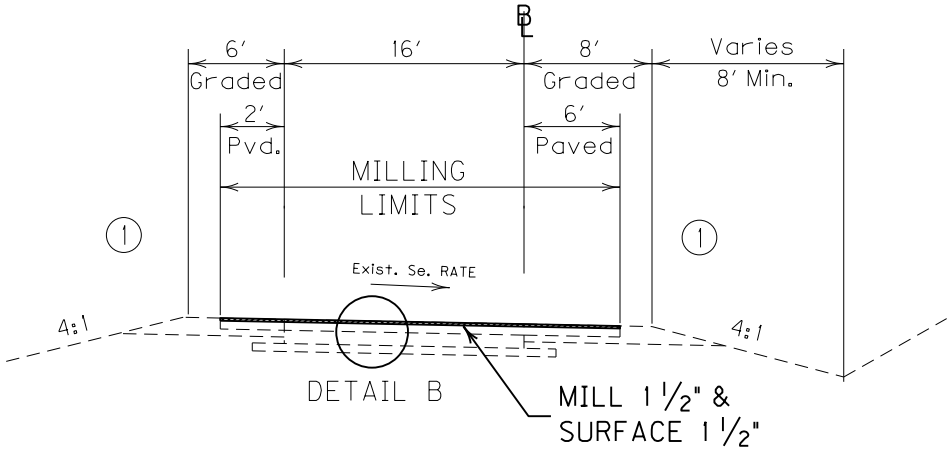

NOT TO SCALE

SUPERELEVATED SECTION

KY 431 RAMP
TYPICAL SECTIONS

WESTERN KY PKWY (KY 9001)
MUHLENBERG COUNTY
PAVEMENT REHABILITATION, MILEPOST 54.285 TO 59.92
ITEM NO. 2–2077
GENERAL SUMMARY

ITEM NUMBER	ITEM		UNIT	QUANTITY
1	DGA BASE	⑤	TONS	500
212	CLASS 2 ASPH. BASE 1.0D PG64-22	⑨	TONS	1,454
309	CLASS 2 ASPH. SURFACE 0.50D PG64-22	⑤	TONS	5,455
332	CLASS 3 ASPH. SURFACE 0.50A PG76-22	⑤	TONS	16,369
216	CLASS 3 ASPH BASE 1.0D PG76-22	⑤	TONS	1,585
100	ASPHALT SEAL AGGREGATE	⑤	TONS	264
103	ASPHALT SEAL COAT	⑤	TONS	32
2677	ASPHALT PAVEMENT MILLING & TEXTURING	⑤	TON	23,709
194	LEVELING AND WEDGING PG76-22		TONS	370
2383	REMOVE AND RESET GUARDRAIL	⑦	L.F.	675
21802EN	GUARDRAIL - STEEL W BEAM - S FACE (7' POST)	⑥	L.F.	137.5
2381	REMOVE GUARDRAIL	⑥	L.F.	137.5
2220	FLOWABLE FILL	③	C.Y.	6
20071EC	JOINT ADHESIVE		L.F.	123,995
2696	SHOULDER RUMBLE STRIPS - SAWED		L.F.	128,978
24191ER	DURABLE WATERBORNE MARKING - 12"W		L.F.	956
24189ER	DURABLE WATERBORNE MARKING - 6" W		L.F.	79,366
24190ER	DURABLE WATERBORNE MARKING - 6" Y		L.F.	63,311
20587ES601	CLASS 'B' CONCRETE	⑪	C.Y.	8
22664EN	WATERBLAST EXISTING STRIPE	⑧	L.F.	800
6550	PAVE STRIPING TEMPORARY REMOVABLE TAPE - W	⑧	L.F.	2,200
6551	PAVE STRIPING TEMPORARY REMOVABLE TAPE - Y	⑧	L.F.	2,200
6511	PAVEMENT STRIPING - TEMPORARY PAINT - 6 IN		L.F.	59,506
3171	CONCRETE BARRIER WALL TYPE 9T		L.F.	1,120
1000	PERF. PIPE - 4"	③	L.F.	29,750
1010	NON-PERF. PIPE - 4"	③	L.F.	3,500
1020	PERF. PIPE HDWL. TYPE 1 - 4"	③	EACH	20
1028	PERF. PIPE HDWL. TYPE 3 - 4"	③	EACH	20
1015	INSPECT & CERTIFY EDGE DRAIN SYSTEM		L.S.	1
1032	PERF. PIPE HDWL. TYPE 4 - 4"		EACH	20
78	CRUSHED AGGREGATE SIZE NO. 2	①	TON	452
1024	PERF PIPE HDWL TYPE 2 - 4"		EACH	20
2575	DITCHING & SHOULDERING		L.F.	29,753
2599	GEOTEXTILE FABRIC TYPE IV		S.Y.	200
8903	CRASH CUSHION TYPE VI BT TL3		EACH	2
1982	DELINEATORS FOR GUARDRAIL (M/W)		EACH	3
6404	FLEXIBLE DELINEATOR POST - MY		EACH	76
6401	FLEXIBLE DELINEATOR POST - MW		EACH	968

CONT. ON NEXT SHT.

① INCLUDES 152 TONS FOR PERF. PIPE HDWLS & 300 TONS TO BE USED AS DIRECTED BY THE ENGINEER FOR SHOULDER REPAIRS.
② CARRIED OVER FROM BRIDGE SHEET
③ ESTIMATED QUANTITY
④ CARRIED OVER FROM TRAFFIC DATA ACQUISITION SUMMARY.
⑤ CARRIED OVER FROM PAVING SUMMARY
⑥ CARRIED OVER FROM GUARDRAIL SUMMARY
⑦ FOR SLOPE CORRECTION AREA & SHLD. REPAIR AREAS.
⑧ FOR LANE CLOSURES ON EXIST. PVMT.
⑨ FOR PERFORATED PIPE TRENCH CAP
⑩ FOR SLOPE CORRECTION AREA.
⑪ USE WITH CL. III CHANNEL LINING FOR GROUT
⑫ THE DISTRICT SHALL RETAIN POSSESION AT THE END OF THE PROJECT

WESTERN KY PKWY (KY 9001)
MUHLENBERG COUNTY
PAVEMENT REHABILITATION, MILEPOST 54.285 TO 59.92
ITEM NO. 2–2077
GENERAL SUMMARY

ITEM NUMBER	ITEM	UNIT	QUANTITY
23143ED	KPDES PERMIT & TEMPORARY EROSION CONTROL	L.S.	1
6412	STEEL POST MILE MARKERS	EACH	10
2483	CHANNEL LINING CLASS II	TON	2,800
2484	CHANNEL LINING CLASS III	TON	1,400
2165	REMOVE PAVED DITCH	S.Y.	36
2562	SIGNS	S.F.	660
2671	PORTABLE CHANGEABLE MESSAGE SIGN ⑫	EACH	4
2775	ARROW PANEL	EACH	4
2650	MAINTAIN AND CONTROL TRAFFIC	L.S.	1
2676	MOBILIZATION FOR MILLING & TEXTURING	L.S.	1
1897	ASPHALT WEDGE CURB	L.F.	325
2482	CHANNEL LINING CLASS 1A	TON	18
2726	STAKING	L.S.	1
4795	CONDUIT 2" INCH ④	L.F.	40
4793	CONDUIT 1-1/4" INCH ④	L.F.	120
4820	TRENCHING AND BACKFILLING ④	L.F.	160
4829	PIEZOELECTRIC SENSOR ④	EACH	8
4830	LOOP WIRE ④	L.F.	2,700
4895	LOOP SAW SLOT AND FILL ④	L.F.	400
20391NS835	ELECTRICAL JUNCTION BOX TYPE A ④	EACH	3
4811	ELECTRICAL JUNCTION BOX TYPE B ④	EACH	2
21543EN	BORE & JACK PIPE - 2" ④	L.F.	85
6593	PAVE MARKER TY. V-B Y/R	EACH	124
6592	PAVE MARKER TY. V-B W/R	EACH	780
2391	GUARDRAIL END TREATMENT TY. 4A	EACH	1
2369	GUARDRAIL END TREATMENT TY. 2A	EACH	1
2387	GUARDRAIL CONNECTOR TO BRIDGE END TY. A-1	EACH	1
2360	GUARDRAIL TERMINAL SECTION NO. 1	EACH	1
10020NS	FUEL ADJUSTMENT	DOLLAR	41,358
10030NS	ASPHALT ADJUSTMENT	DOLLAR	103,878
2568	MOBILIZATION	L.S.	1
2569	DEMOBILIZATION	L.S.	1
2003	RELOCATE TEMPORARY CONCRETE BARRIER	L.F.	1,120
2898	RELOCATE CRASH CUSHION	EACH	2
3266	CLEANING AND SWEEPING	MILE	2
20411ED	LAW ENFORCEMENT OFFICER (LEO)	HOURS	300

CONT. ON NEXT SHT.

① INCLUDES 152 TONS FOR PERF. PIPE HDWLS & 300 TONS TO BE USED AS DIRECTED BY THE ENGINEER FOR SHOULDER REPAIRS.
② CARRIED OVER FROM BRIDGE SHEET
③ ESTIMATED QUANTITY
④ CARRIED OVER FROM TRAFFIC DATA ACQUISITION SUMMARY.
⑤ CARRIED OVER FROM PAVING SUMMARY
⑥ CARRIED OVER FROM GUARDRAIL SUMMARY
⑦ FOR SLOPE CORRECTION AREA & SHLD. REPAIR AREAS.
⑧ FOR LANE CLOSURES ON EXIST. PVMT.
⑨ FOR PERFORATED PIPE TRENCH CAP
⑩ FOR SLOPE CORRECTION AREA.
⑪ USE WITH CL. III CHANNEL LINING FOR GROUT
⑫ THE DISTRICT SHALL RETAIN POSSESION AT THE END OF THE PROJECT

WESTERN KY PKWY (KY 9001)
MUHLENBERG COUNTY
PAVEMENT REHABILITATION, MILEPOST 54.285 TO 59.92
ITEM NO. 2-2077
GENERAL SUMMARY

ITEM NUMBER	ITEM		UNIT	QUANTITY
24094EC	PARTIAL DEPTH PATCHING	②	C.Y.	19
8526	CONCRETE CLASS "M" FULL DEPTH PATCH	②	C.Y.	8
8534	CONCRETE OVERLAY - LATEX	②	C.Y.	89
8549	BLAST CLEANING	②	S.Y.	2,267
8151	STEEL REINFORCEMENT, EPOXY COATED	②	LBS.	542
8551	MACHINE PREPARATION OF SLAB	②	S.Y.	2,160
8504	EPOXY SAND SLURRY	②	S.Y.	243
3299	ARMORED EDGE	②	L.F.	175
8470	EXPANSION DAM 2.0" NEOPRENE	②	L.F.	175

① INCLUDES 152 TONS FOR PERF. PIPE HDWLS & 300 TONS TO BE USED AS DIRECTED BY THE ENGINEER FOR SHOULDER REPAIRS.
② CARRIED OVER FROM BRIDGE SHEET
③ ESTIMATED QUANTITY
④ CARRIED OVER FROM TRAFFIC DATA ACQUISITION SUMMARY.
⑤ CARRIED OVER FROM PAVING SUMMARY
⑥ CARRIED OVER FROM GUARDRAIL SUMMARY
⑦ FOR SLOPE CORRECTION AREA & SHLD. REPAIR AREAS.
⑧ FOR LANE CLOSURES ON EXIST. PVMT.
⑨ FOR PERFORATED PIPE TRENCH CAP
⑩ FOR SLOPE CORRECTION AREA.
⑪ USE WITH CL. III CHANNEL LINING FOR GROUT
⑫ THE DISTRICT SHALL RETAIN POSSESION AT THE END OF THE PROJECT

WESTERN KY PKWY (KY 9001)
MUHLENBERG COUNTY
PAVEMENT REHABILITATION, MILEPOST 54.285 TO 59.92 EB & WB
ITEM NO. 2–2077
PAVING SUMMARY

PAVING AREAS		PAVING AREAS	
ITEM	**TOTAL**	**ITEM**	**TOTAL**
MAINLINE TRAFFIC LANES & INSIDE SHOULDERS ⑤	**S.Y.**	**ASPHALT PAVE MILLING & TEXTURING** ⑤	**S.Y.**
1½" CL3 ASPH SURF 0.50A PG76-22	185,130	MAINLINE AND SHOULDERS (1½")	251,248
		KY 431 RAMPS (1½")	13,287
MAINLINE OUTSIDE SHOULDERS	**S.Y.**	PAVEMENT REPAIR AREAS (4 INCH)	2,403
1½" CL2 ASPH SURF 0.50D PG64-22	66,118	PAVEMENT REPAIR AREAS (8 INCH)	2,403
KY 431 RAMPS	**S.Y.**	**PAVEMENT REPAIR AREAS**	**S.Y.**
1½" CL3 ASPH SURF 0.50A PG76-22	13,287	4" CL3 ASPHALT BASE 1.0D PG76-22	2,403
		8" CL3 ASPHALT BASE (2 4" COURSES) 1.0D PG76-22	2,403
ASPHALT SEAL COAT (2 APPLICATIONS) ②	26,446		
ASPHALT SEAL AGGREGATE (2 APPLICATIONS) ①	26,446	**LONGITUDINAL EDGE DRAIN TRENCH CAP**	
		8" CL.2 ASPHALT BASE 1.0D PG64-22	3,305
		CROSS-SLOPE CORRECTION	**C.Y.**
		3 ½" AVE. DEPTH LEVELING & WEDGING PG76-22	187

PAVING SUMMARY

CODE	ITEM	UNITS	PROJECT TOTAL
1	DGA BASE ③	TON	500
332	CLASS 3 ASPHALT SURFACE 0.50A PG76-22	TON	16,369
309	CLASS 2 ASPHALT SURFACE 0.50D PG64-22	TON	5,455
216	CLASS 3 ASPHALT BASE 1.0D PG76-22	TON	1,585
2677	ASPHALT PAVEMENT MILLING & TEXTURING ④	TON	23,709
2696	SHOULDER RUMBLE STRIPS - SAWED	LIN FT	128,978
100	ASPHALT SEAL AGGREGATE ①	TON	264
103	ASPHALT SEAL COAT ②	TON	32
212	CLASS 2 ASPHALT BASE 1.0D PG64-22 (TRENCH CAP)	TON	1,454
194	LEVELING AND WEDGING PG76-22	TON	370

① ESTIMATED AT 20 LBS/S.Y. FOR ENTIRE AREA (ONE APPLICATION)

② ESTIMATED AT 2.4 LBS/S.Y. FOR ENTIRE AREA (ONE APPLICATION)

③ TO BE USED AS DIRECTED BY THE ENGINEER

④ INCLUDES 300 TONS TO BE USED AS DIRECTED BY THE ENGINEER

⑤ INCLUDES MEDIAN CROSSOVER AT M.P. 54.75

ALL QUANTITIES HAVE BEEN CARRIED OVER AND INCLUDED IN THE GENERAL SUMMARY

WESTERN KY PKWY (KY 9001)
MUHLENGERG COUNTY
PAVEMENT REHABILITATION, MILEPOST 54.285 TO 59.92
ITEM NO. 2–2077
EASTBOUND GUARDRAIL SUMMARY

MILEPOST	GUARDRAIL–STEEL W BEAM–S FACE (7 FT POST) (LF)	GUARDRAIL–STEEL W BEAM–S FACE (NESTED) (7 FT POST) (LF)	GUARDRAIL CONNECTOR TO BRIDGE END TY A–1 (EACH)	GUARDRAIL TERMINAL SECTION NO 1 (FOR TY2A END TREATMENT REPAIR)	GUARDRAIL END TREATMENT TYPE 2A (EACH)	GUARDRAIL END TREATMENT TYPE 4A (EACH)	REMOVE GUARDRAIL	CRASH CUSHION TYPE IX–A (EACH)	REMOVE & RESET GUARDRAIL	DESCRIPTION
ITEM NO.	21802EN	24381EC	2387	2360	2369	2391	2381	2365	2383	
MP 52.95	12.5									DAMAGED GUARDRAIL
MP 55.87									25	FOR SLOPE REPAIR
MP 57.95									25	FOR SLOPE REPAIR
MP 58.83									25	FOR SLOPE REPAIR
SHT. TOTAL	12.5								75	

WESTERN KY PKWY (KY 9001)
MUHLENGERG COUNTY
PAVEMENT REHABILITATION, MILEPOST 54.285 TO 59.92
ITEM NO. 2–2077
WESTBOUND GUARDRAIL SUMMARY

MILEPOST	GUARDRAIL–STEEL W BEAM–S FACE (7 FT POST) (LF)	GUARDRAIL–STEEL W BEAM–S FACE (NESTED) (7 FT POST) (LF)	GUARDRAIL CONNECTOR TO BRIDGE END TY A–1 (EACH)	GUARDRAIL TERMINAL SECTION NO 1 (FOR TY2A END TREATMENT REPAIR)	GUARDRAIL END TREATMENT TYPE 2A (EACH)	GUARDRAIL END TREATMENT TYPE 4A (EACH)	REMOVE GUARDRAIL	CRASH CUSHION TYPE IX–A (EACH)	REMOVE & RESET GUARDRAIL	DESCRIPTION
ITEM NO.	**21802EN**	**24381EC**	**2387**	**2360**	**2369**	**2391**	**2381**	**2365**	**2383**	
MP 57.28	50									DAMAGED GUARDRAIL
MP 57.95	25									DAMAGED GUARDRAIL
MP 55.55	50		1		1					INSIDE SHLD. (Box Protection)
MP 55.88				1						REPLACE EXISTING
MP 57.99						1				REPLACE EXISTING ON RAMP
MP 55.78									25	FOR SLOPE REPAIR
MP 55.96									75	FOR SLOPE REPAIR
MP 57.60									25	FOR SLOPE REPAIR
MP 57.83									25	FOR SLOPE REPAIR
M.P. to M.P.										
55.68 - 55.75									450	CROSS SLOPE CORRECTION
SHT. TOTAL	125		1	1	1	1			600	
PROJ. TOTAL	137.5		1	1	1	1			675	

COUNTY OF	ITEM NO.	SHEET NO.
MUHLENBERG	2-2077	

WESTERN KY PKWY
KY 9001
PAVEMENT REPAIR

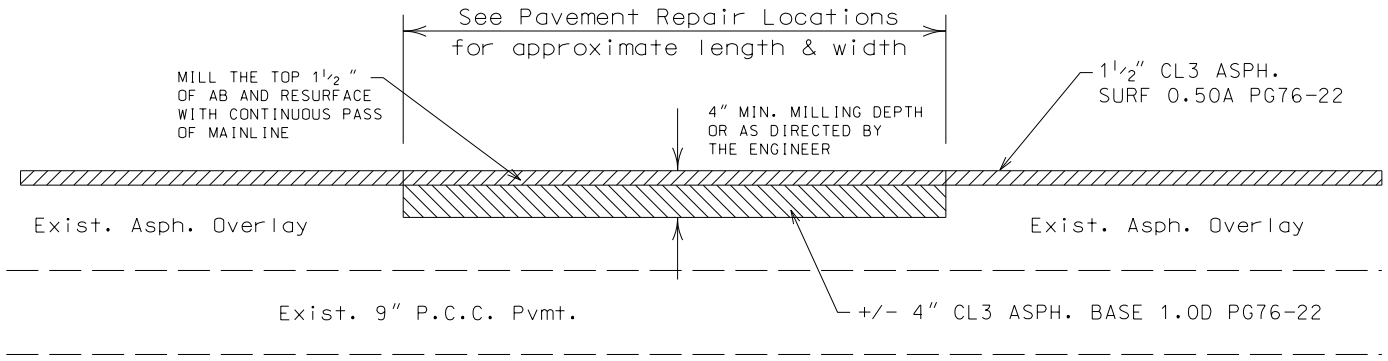

PAVEMENT REPAIR PROFILE DETAIL

1 **"PAVEMENT REPAIR" locations are approximate. The Engineer shall make the final determination as to the width, depth, and length and the exact location of each pavement repair.**

Once work has begun, the contractor will work continously until the repair is completed.

After all existing material has been removed to the dimensions shown, or as directed by the Engineer each course of Asphalt Refill shall be compacted to the proper density for the material being placed as required in the Standard Specifications.

Bid items for this work are as follows:
Asphalt Milling and Texturing
CL 3 Asphalt Base 1.0D PG76–22

NOT TO SCALE

MUHLENBERG CO.
KY 9001
PAVEMENT REPAIR

COUNTY OF	ITEM NO.	SHEET NO.
MUHLENBERG	2-2077	

PAVEMENT REPAIR LOCATIONS
WESTERN KY. PKWY. KY 9001

LOCATION	M.P.	WIDTH *	LENGTH *	S.Y.
EB INSIDE	54.32	12	125	167
EB INSIDE	54.36	12	75	100
EB OUTSIDE	54.43	12	50	67
EB OUTSIDE	54.47	12	50	67
EB OUTSIDE	54.60	12	60	80
EB OUTSIDE	54.74	12	250	333
EB OUTSIDE	54.99	12	25	33
EB OUTSIDE	55.36	12	50	67
EB EXIT SIDE	55.59	24	BRIDGE END 60	160
EB OUTSIDE	55.84	12	50	67
EB ENTERING	56.03	24	BRIDGE END 50	133
EB OUTSIDE	56.39	12	6	8
EB OUTSIDE	57.00	12	50	67
EB ENTERING	57.61	24	BRIDGE END 40	107
EB EXIT	57.64	24	BRIDGE END 50	133
EB INSIDE	58.29	12	50	67
EB OUTSIDE	58.33	12	200	267
EB ENTERING	59.18	24	BRIDGE END 30	80
EB EXIT	59.21	24	BRIDGE END 60	160
WB OUTSIDE	54.33	12	50	67
WB OUTSIDE	54.34	12	50	67
WB OUTSIDE	54.39	12	50	67
WB OUTSIDE	54.43	12	30	40
WB OUTSIDE	54.48	12	60	80
WB OUTSIDE	54.51	12	50	67

LOCATION	M.P.	WIDTH *	LENGTH *	S.Y.
BOTH LANES	55.39	24	25	67
WB OUTSIDE	55.50	12	50	67
WB EXITING	55.55	24	BRIDGE END 30	80
WB ENTERING	55.60	24	BRIDGE END 50	133
WB OUTSIDE	55.68	12	60	80
BOTH LANES	55.73	24	25	67
BOTH LANES	55.90	24	60	160
WB EXITING	56.03	24	BRIDGE END 30	80
WB ENTERING	56.08	24	BRIDGE END 30	80
WB EXITING	57.61	24	BRIDGE END 60	160
WB ENTERING	57.64	24	BRIDGE END 40	107
WB OUTSIDE	58.33	12	200	267
BOTH LANES	59.16	24	BRIDGE END 250	667
BOTH LANES	59.21	24	BRIDGE END 90	240
TOTAL PROJECT				*4806*

WIDTH AND LENGTH MAY BE ADJUSTED BY THE ENGINEER

* **Pavement Repair paid per ton milling and asphalt mixes.**

PAVEMENT REPAIR LOCATIONS

COUNTY OF	ITEM NO.	SHEET NO.
MUHLENBERG	2-2077	

SHOULDER (SLOPE) REPAIR DETAIL

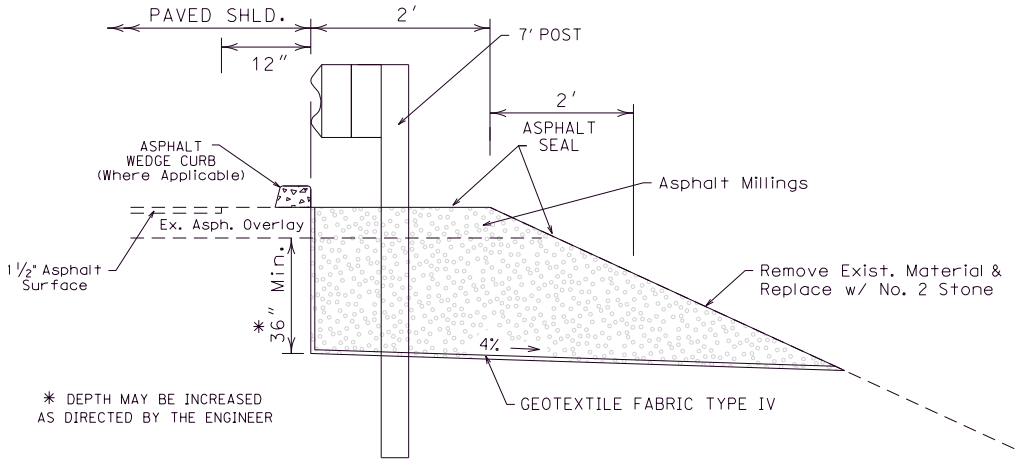

SLOPE REPAIR DETAIL

SHOULDER REPAIR AREAS			
LOCATIONS (WB)	LENGTH (LF)	LOCATION (EB)	LENGTH (LF)
55.78	25	55.87	25
55.96	75	57.95	25
57.60	25	58.83	25
57.83	25		
WB TOTAL	150	EB TOTAL	75

SLOPE REPAIR NOTE :

EXCAVATION SHOWN SHALL BE INCLUDED IN THE BID ITEM "DITCHING & SHOULDERING". EXCAVATED MATERIAL FROM SHOULDERING SHALL BE DISPOSED OF OFF THE PROJECT LIMITS.

NUMBER 2 STONE FOR REFILL SHALL BE PAID PER "TON". GEOTEXTILE FABRIC TYPE IV SHALL BE PAID PER "SQUARE YARD".

NOT TO SCALE

US 60
SHOULDER REPAIR DETAIL

COUNTY OF	ITEM NO.	SHEET NO.
MUHLENBERG	2-2077	

LONGITUDINAL EDGE DRAIN DETAIL

SPECIAL NOTE FOR PAVEMENT SUBSURFACE DRAINAGE OUTLET

A QUANTITY OF CRUSHED AGGREGATE SIZE NO. 2 AS DEFINED IN THE CURRENT "KENTUCKY STANDARD SPECIFICATIONS FOR ROAD AND BRIDGE CONSTRUCTION" SHALL BE USED AT ALL PERFORATED PIPE HEADWALL OUTLETS AS ILLUSTRATED IN THE DETAIL AT RIGHT. CRUSHED AGGREGATE SIZE NO. 2 SHALL BE PLACED A MINIMUM DEPTH OF 4 INCHES AS DETAILED BELOW.

DENSE GRADED AGGREGATE (DGA) REMOVED DURING PLACEMENT OF THE CRUSHED AGGREGATE SIZE NO. 2 SHALL BE USED TO DRESS THE EXISTING SHOULDERS WHERE DGA IS EXPOSED. OTHER MATERIALS REMOVED DURING PLACEMENT OF THE CRUSHED AGGREGATE SIZE NO. 2 SHALL BE WASTED AS DIRECTED BY THE ENGINEER. NO DIRECT PAYMENT WILL BE ALLOWED FOR DISPOSAL OF WASTED MATERIAL.

THE CONTRACT UNIT PRICE FOR "CRUSHED AGGREGATE SIZE NO. 2" SHALL BE FULL COMPENSATION FOR ALL MATERIALS, LABOR, AND OTHER INCIDENTALS NECESSARY TO PLACE CRUSHED AGGREGATE SIZE NO. 2 FOR CONTROL OF VEGETATION AND/OR EROSION CONTROL AT PAVEMENT EDGE DRAIN OUTLETS.

SEE CURRENT STANDARD DRAWING RDP-010 FOR DIMENSIONS AND OTHER DETAILS.

ESTIMATE ONE TON OF CRUSHED AGGREGATE SIZE NO. 2 FOR EACH PERFORATED PIPE HEADWALL OUTLET.

NOTES :

(1) EXISTING LONGITUDINAL EDGE DRAINS ON THE ALONG THE EDGE OF EXISTING PAVEMENT SHALL BE REMOVED AS DETERMINED BY INSPECTING AND CERTIFYING AND NEW EDGE DRAINS CONSTRUCTED. ASPHALT QUANTITIES HAVE BEEN ADDED FOR THE CAP REPLACEMENT (SEE DETAIL).

ALL LONGITUDINAL PIPE DRAINAGE SYSTEMS FOR THE PAVEMENT SHALL BE OUTLETTED TO A HEADWALL OR MEDIAN BOX INLET. OUTLETS SHALL BE IN FILL SECTION WHENEVER POSSIBLE. OUTLET SPACING FOR THE 4" PIPE ON THE OUTSIDE EDGE OF EXIST. PVMT. SHALL NOT EXCEED 500 FEET EXCEPT GRADES 1% OR LESS, THEN THE SPACING SHALL NOT EXCEED 250 FEET. ALL SAGS SHALL HAVE AN OUTLET. USE EXISTING OUTFALL LOCATIONS WHERE POSSIBLE. REUSE EXISTING PERFORATED PIPE HEADWALLS WHERE POSSIBLE.

(2) FABRIC GEOTEXTILE TYPE IV AND CRUSHED AGGREGATE SIZE NO. 57 ARE INCIDENTAL TO PERFORATED PIPE-4". REMOVAL OF EXISTING EDGE DRAIN ON THE INSIDE AND OUTSIDE SHOULDER SHALL BE INCLUDED IN THE UNIT PRICE BID FOR NEW PERFORATED PIPE. WASTE THE EXISTING UNDERDRAIN PIPE. EXISTING PERFORATED PIPE HEADWALLS NOT BEING USED SHALL BECOME THE PROPERTY OF THE CONTRACTOR.

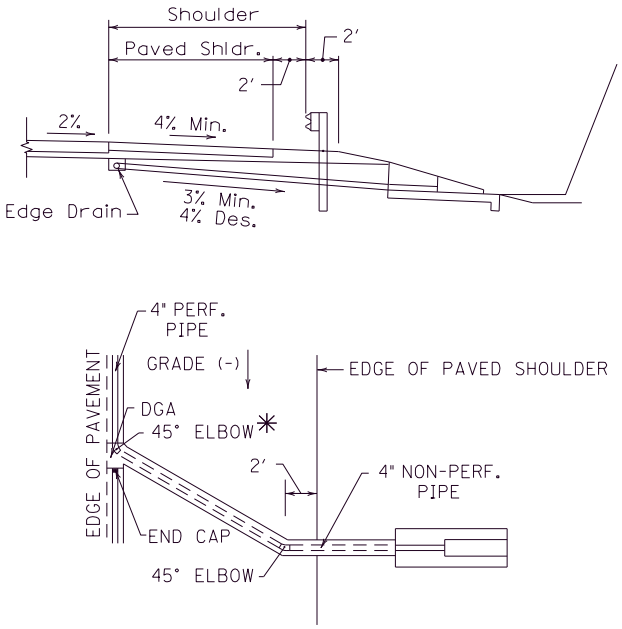

✳ Use Tee in Lieu of Elbow at Sump Conditions

(OUTSIDE SHOULDER)

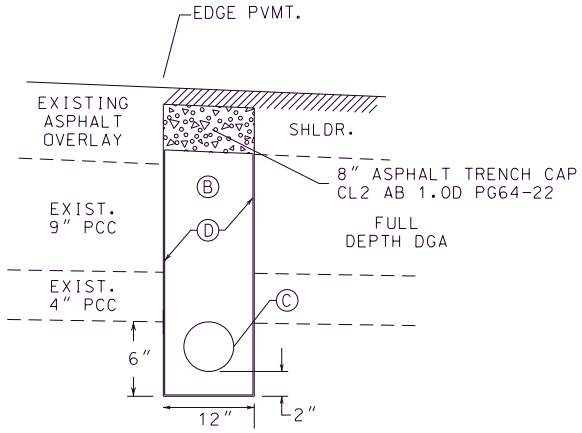

Ⓑ CRUSHED AGGREGATE SIZE No. 57 (NO SAND)

Ⓒ PERFORATED PIPE - 4" (NO SOCK)
NON-PERFORATED PIPE - 4" (OUTLET)

Ⓓ TYPE IV GEOTEXTILE FABRIC

PERFORATED PIPE DRAIN REPLACEMENT

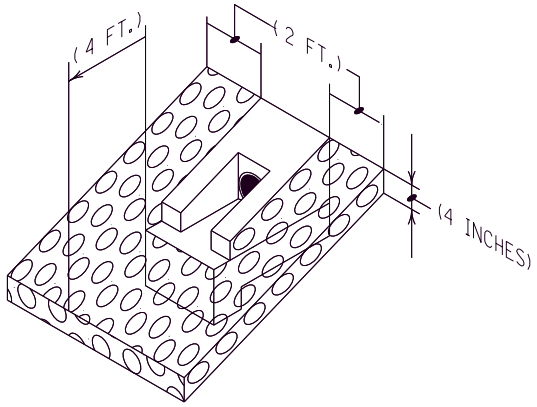

PAVEMENT SUBSURFACE DRAINAGE OUTLET

NOT TO SCALE

I-64 PROPOSED EDGE DRAIN DETAIL

COUNTY OF	ITEM NO.	SHEET NO.
MUHLENBERG	2-2077	

REFERENCE LOCATION SIGN

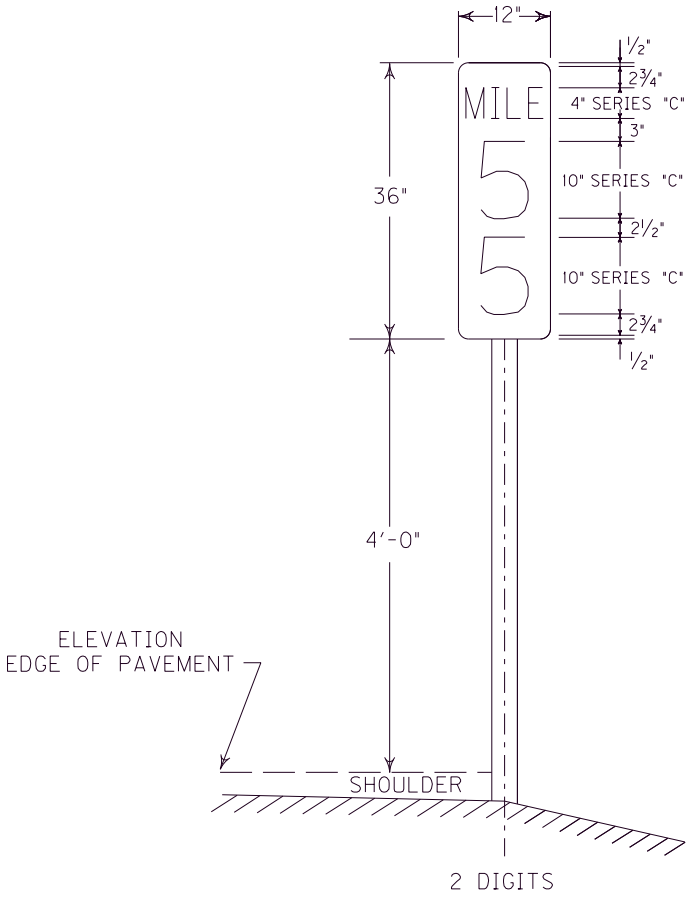

MILE POINT RANGE FOR EASTBOUND DIRECTION	* NUMBER OF MILE POSTS
55 TO 59	5

MILE POINT RANGE FOR WESTBOUND DIRECTION	* NUMBER OF MILE POSTS
59 TO 55	5

NOTES:

* MILE POSTS ARE TO BE PLACED AT 1.0 MILE INTERVAL.

** REMOVAL OF EXISTING REFERENCE MARKERS IS TO BE CONSIDERED INCIDENTAL TO THE CONTRACT.

TYPICAL SIGN PANEL DIMENSIONS AND REFERENCE MARKER LOCATION

NOT TO SCALE

MILE MARKER SIGNING POSITIONING DETAIL SHEET

COUNTY OF	ITEM NO.	SHEET NO.
CALDWELL/ HOPKINS	2-2075	

NOTES

1. THE DELINEATOR'S SHAPE AND DIMENSIONS ARE SHOWN FOR ILLUSTRATION PURPOSES ONLY. TYPES OF DELINEATORS PERMITTED SHALL BE FROM THE LIST OF APPROVED MATERIALS.
2. DELINEATOR SHALL BE MEASURED AND PAID FOR AT THE CONTRACT UNIT PRICE EACH AND SHALL INCLUDE ALL MATERIALS AND LABOR NECESSARY FOR ONE COMPLETE INSTALLATION.
3.

CODE	PAY ITEM	PAY UNIT
1982	DELINEATOR FOR GUARDRAIL - MONO DIRECTIONAL WHITE	EACH
1983	DELINEATOR FOR GUARDRAIL - MONO DIRECTIONAL YELLOW	EACH
1987	DELINEATOR FOR GUARDRAIL - BI-DIRECTIONAL WHITE	EACH

4. GUARDRAIL DELINEATORS SHALL BE REQUIRED ON ALL GUARDRAIL.
5. DELINEATORS SHALL BE MANUFACTURED FROM 12 GA. GALVANIZED STEEL.
6. DIMENSIONS SHOWN ARE APPROXIMATE AND ARE SUBJECT TO MANUFACTURER'S TOLERANCES.
7. WHEN CONCRETE BARRIERS EXTEND ACROSS BRIDGE STRUCTURES IN LIEU OF STEEL BEAM GUARDRAIL, DELINEATORS SHALL BE INSTALLED AT SAME VERTICAL ALIGNMENT AS ON THE GUARDRAIL, AND DELINEATORS SHALL COMPLY WITH CURRENT SEPIA DRAWING 004.
8. DELINEATORS SHALL BE INSTALLED IN ACCORDANCE WITH MANUFACTURER'S RECOMMENDATIONS.

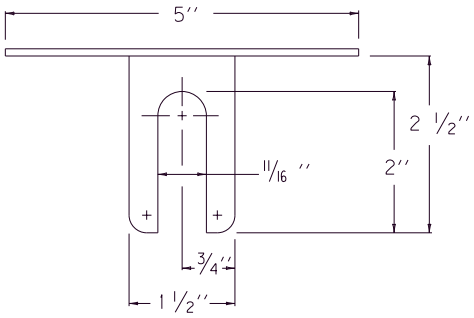

PLAN VIEW

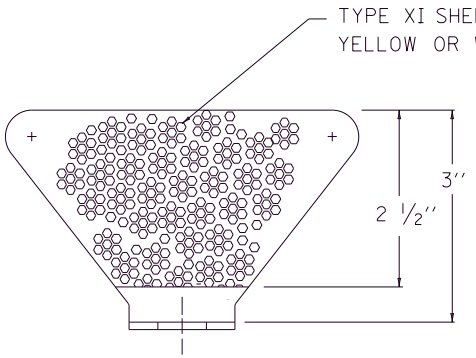

FRONT VIEW

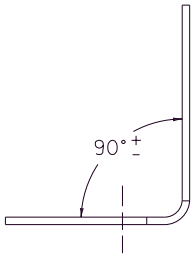

SIDE VIEW

NOTE: DIMENSIONS SHOWN ARE FOR ONE VERSION OF A WEB-MOUNTED GUARDRAIL DELINEATOR. DELINEATORS WITH ALTERNATE DIMENSIONS MAY BE CONSIDERED FOR INCLUSION ON THE APPROVED PRODUCTS LIST.

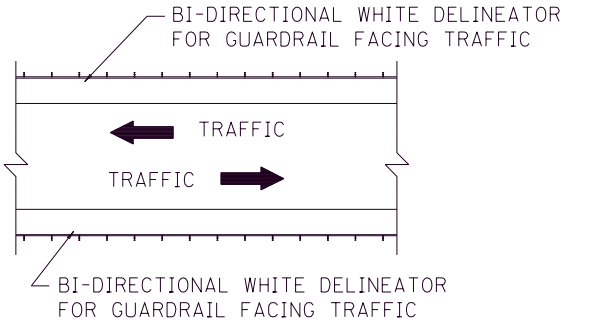

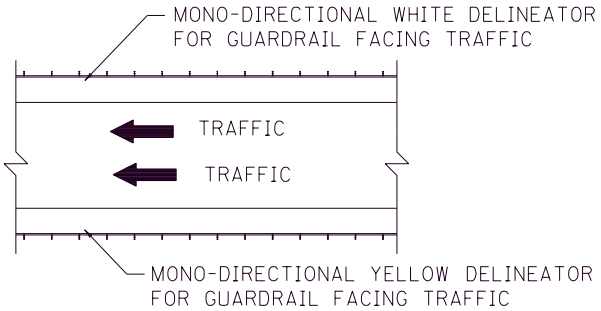

PLACEMENT OF DELINEATORS FOR GUARDRAIL

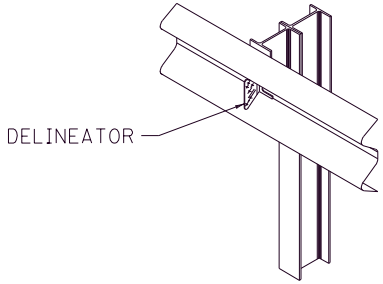

ISOMETRIC VIEW

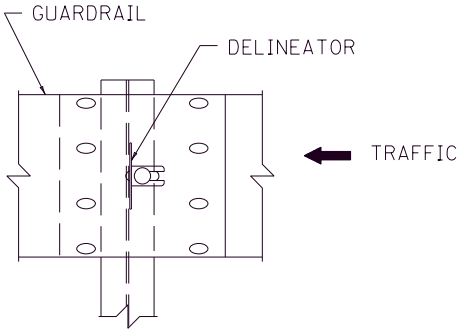

FRONT VIEW

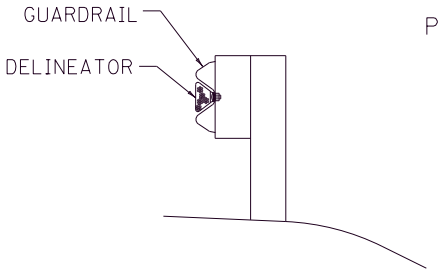

SIDE VIEW

APPROXIMATE DELINEATOR SPACING	
TANGENT	100'
CURVE	50'

SPACING SHOULD BE ADJUSTED IN CURVES SO THAT SEVERAL DELINEATORS ARE ALWAYS SIMULTANEOUSLY VISIBLE TO THE ROAD USER.

KENTUCKY DEPARTMENT OF HIGHWAYS

DELINEATORS FOR GUARDRAIL

SUBMITTED _____ DIRECTOR DIVISION OF DESIGN 6-15-2012 DATE

002

COUNTY OF	ITEM NO.	SHEET NO.
CALDWELL/ HOPKINS	2-2075	

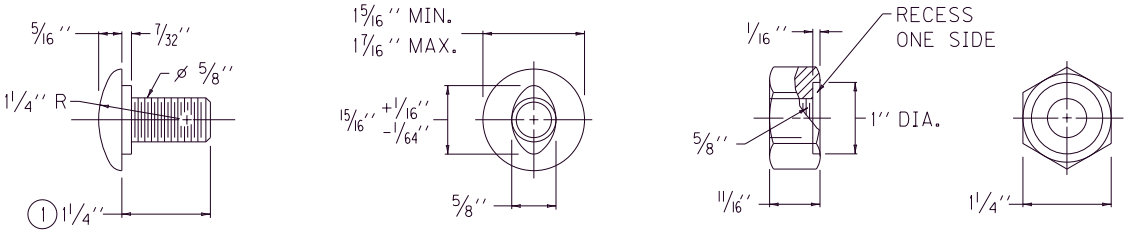

5/8'' BUTTON HEAD BOLT AND RECESSED NUT

NOTES

1. RAIL BOLT SIMILAR EXCEPT LENGTH.
2. THE THRIE BEAM TO ''W'' BEAM CONNECTOR SHALL COMPLY WITH AASHTO M-180 CLASS A, TYPE 2 EXCEPT WHERE IN CONFLICT WITH THIS DETAIL.

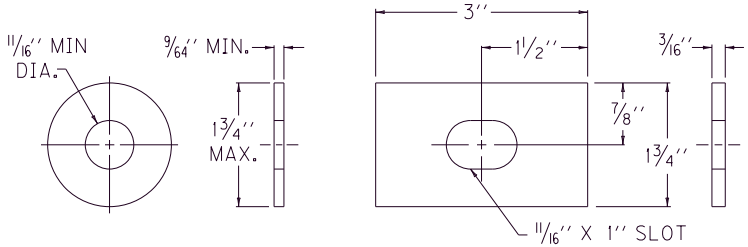

ROUND WASHER AND RECTANGULAR PLATE WASHER

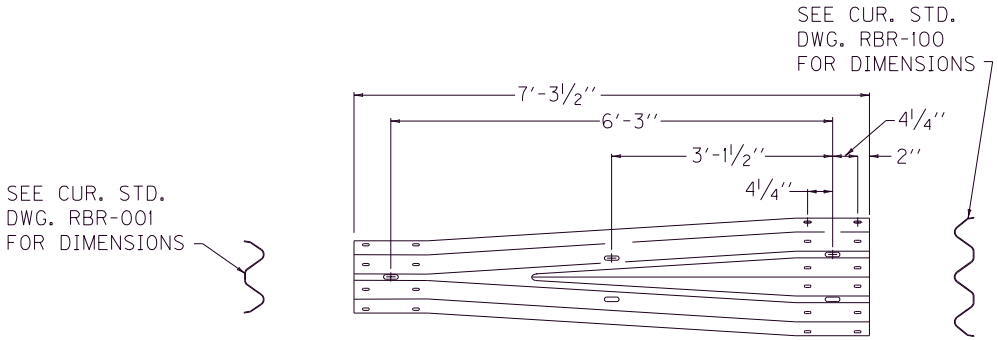

THRIE BEAM TO ''W'' BEAM CONNECTOR 2

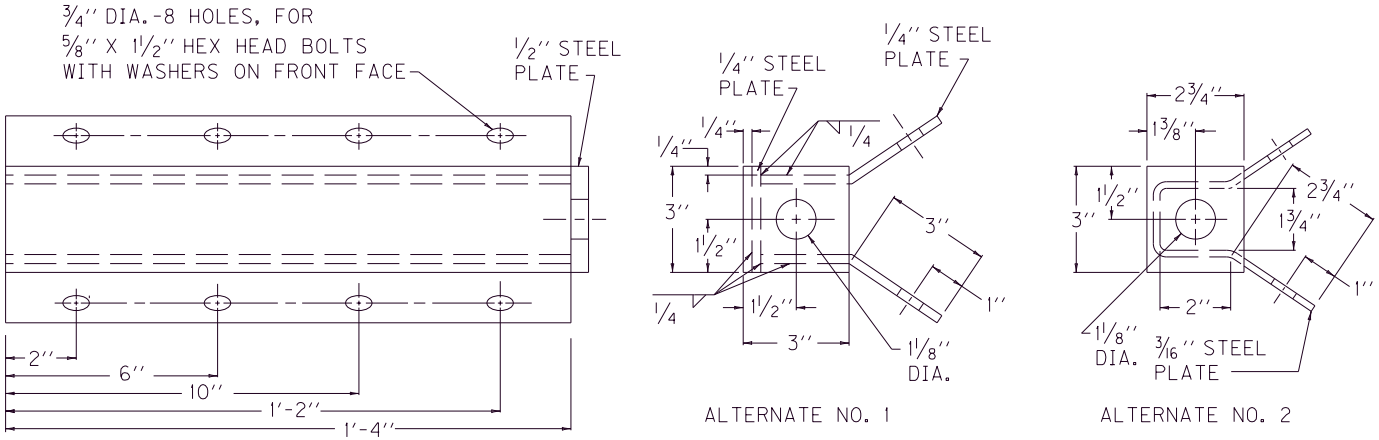

ALTERNATE NO. 1

ALTERNATE NO. 2

RAIL ANCHOR ASSEMBLY

KENTUCKY DEPARTMENT OF HIGHWAYS

GUARDRAIL COMPONENTS

SUBMITTED [signature] TEBM DIVISION OF DESIGN 6-15-2012 DATE

008

COUNTY OF	ITEM NO.	SHEET NO.
CALDWELL/ HOPKINS	2-2075	

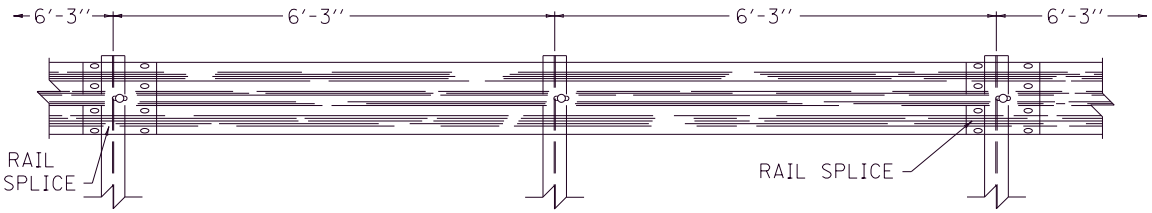

ELEVATION VIEW

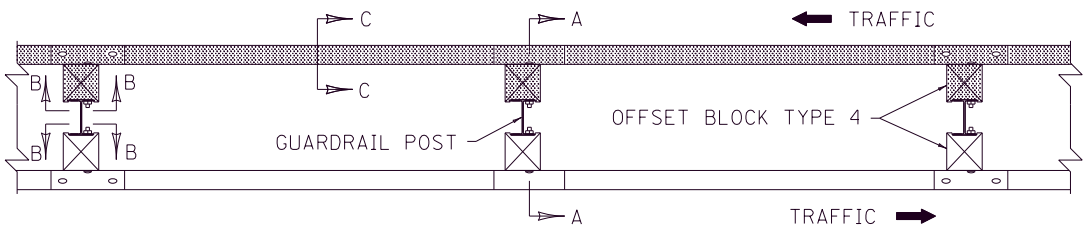

PLAN VIEW
(DOUBLE FACE RAIL OR SINGLE FACE RAIL)

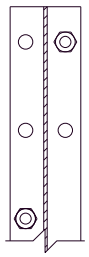

SECTION B-B

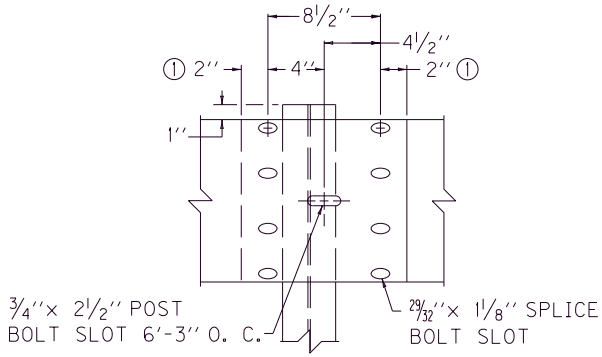

RAIL SPLICE ②

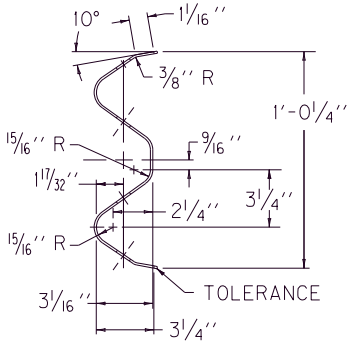

SECTION C-C
(RAIL CORRUGATED
SHEET STEEL BEAM)

NOTES

THE CONTRACT UNIT PRICE BID SHALL BE:
GUARDRAIL-STEEL W BEAM-SINGLE FACE - LIN. FT.
OR
GUARDRAIL-STEEL W BEAM-DOUBLE FACE - LIN. FT.

DIMENSIONAL TOLERANCES NOT SHOWN OR IMPLIED ARE INTENDED TO BE THOSE CONSISTENT WITH THE PROPER FUNCTIONING OF THE PART, INCLUDING ITS APPEARANCE AND ACCEPTED MANUFACTURING PRACTICES.

THE RAIL ELEMENT SHALL COMPLY WITH AASHTO M-180 -CLASS A, TYPE II.

ALL LAPS SHALL BE PLACED IN THE DIRECTION OF TRAFFIC FLOW.

① TOLERANCE + 1¼", -¼"

② 8 -⅝"× 1¼" LONG BUTTON HEAD BOLTS AND HEX HEAD RECESS NUTS REQUIRED FOR EACH RAIL SPLICE.

③ LENGTH EQUALS POST AND BLOCK WIDTH PLUS: 2" FOR BOLT OR 2¼" FOR THREADED ROD.

④ GALVANIZED STEEL 10d COMMON COATED NAIL (DRIVE NAIL AT THE TOP OR BOTTOM CENTER OF BLOCK AND POST AFTER BOLT IS INSTALLED).

⑤ ⅝"× ③ STEEL THREADED ROD AND TWO (2) HEX HEAD NUTS OR ⅝"× ③ BUTTON OR HEX HEAD BOLT AND HEX HEAD NUT.

⑥ ⅝"×8" BUTTON HEAD BOLT, HEX HEAD RECESS NUT AND ONE ⅝" ROUND WASHER (TYP.). BOLT SHALL HAVE A MINIMUM THREAD LENGTH OF 2".

REQUIRED FOR DOUBLE RAIL

7 BOTH 12'-6" AND 25' LENGTHS OF "W" BEAM GUARDRAIL SECTIONS WILL BE PERMITTED UNLESS OTHERWISE DIRECTED BY THE ENGINEER.

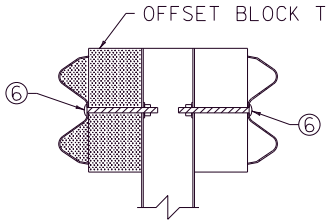

SECTION A-A
DOUBLE FACE RAIL WITH
STEEL POST (W6×9)
(TIMBER OFFSET BLOCK)

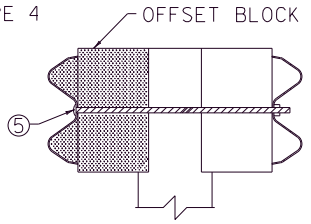

SECTION A-A
DOUBLE FACE RAIL WITH
ROUND TIMBER POST

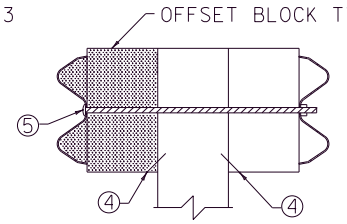

SECTION A-A
DOUBLE FACE RAIL WITH
TIMBER POST

KENTUCKY
DEPARTMENT OF HIGHWAYS

STEEL BEAM
GUARDRAIL
("W" BEAM)

SUBMITTED _____ DIRECTOR DIVISION OF DESIGN — 12-11-12 DATE

012

COUNTY OF	ITEM NO.	SHEET NO.
CALDWELL/ HOPKINS	2-2075	

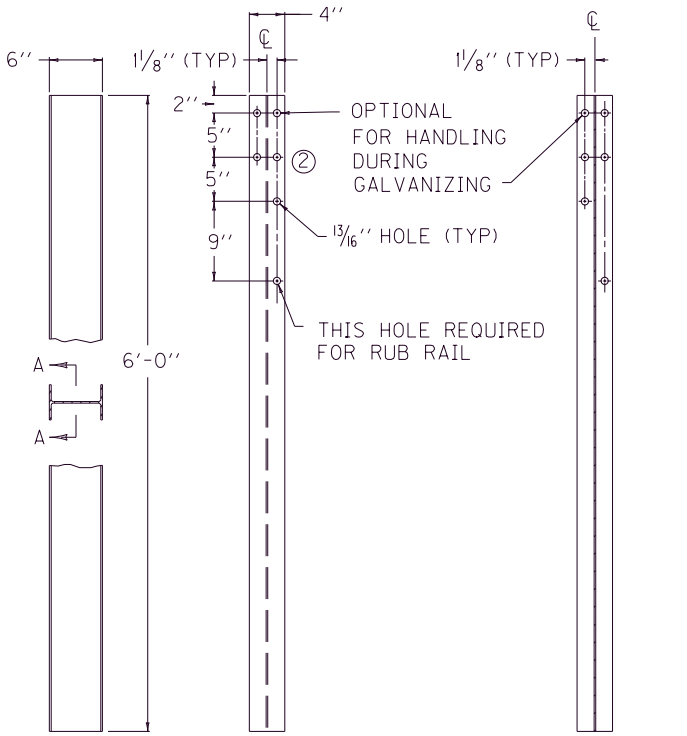

SIDE VIEW FRONT VIEW SECTION A-A

~ W6 X 9.0 STEEL POST ① ~

~ NOTES ~

① W6 X 8.5 IS AN ACCEPTABLE ALTERNATE.
② THESE HOLES REQUIRED FOR ATTACHING RAIL.

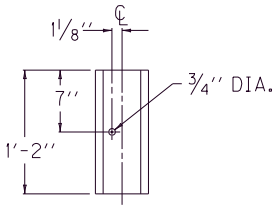

REAR ELEVATION

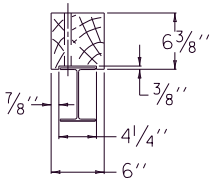

PLAN VIEW

OFFSET BLOCK TYPE 4
(TIMBER)
(FOR USE WITH STEEL POST ONLY)

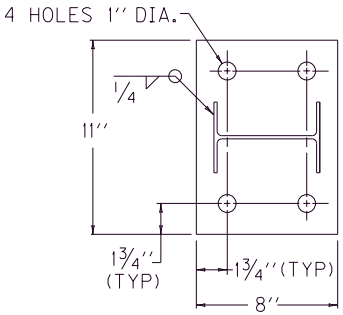

PLAN VIEW

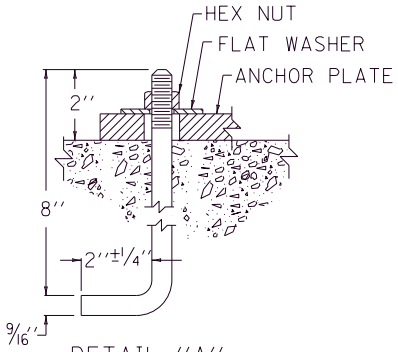

DETAIL ''A''

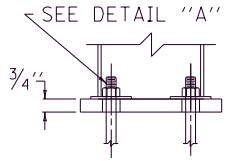

SIDE VIEW
ANCHOR PLATE

KENTUCKY DEPARTMENT OF HIGHWAYS

GUARDRAIL POSTS

SUBMITTED [signature] 9-27-13 DATE

013

COUNTY OF	ITEM NO.	SHEET NO.
CALDWELL/ HOPKINS	2-2075	

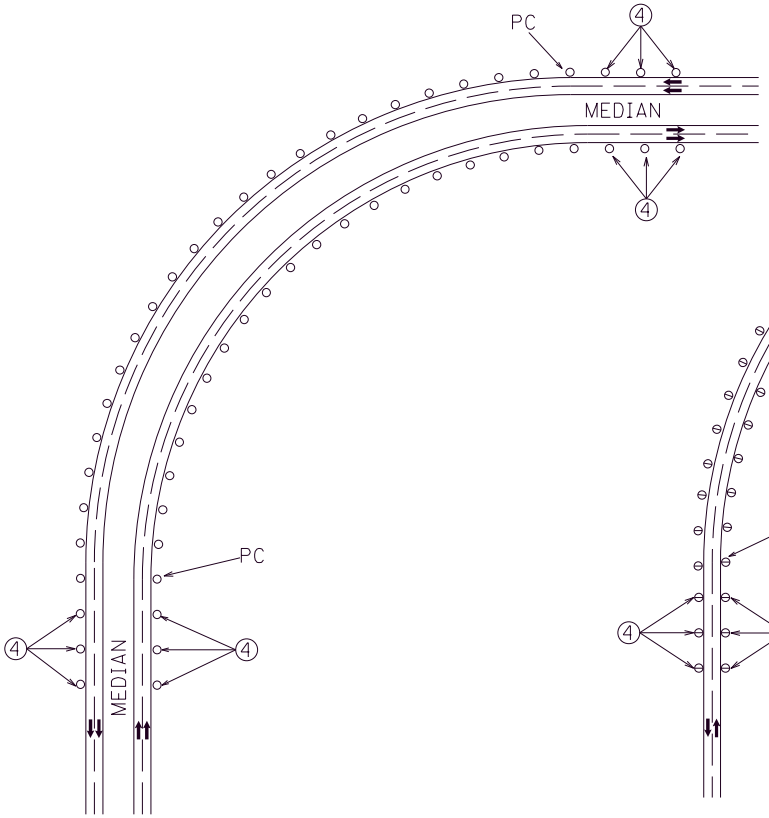

DELINEATION FOR HORIZONTAL CURVES
ON MULTI-LANE EXPRESSWAYS/FREEWAYS

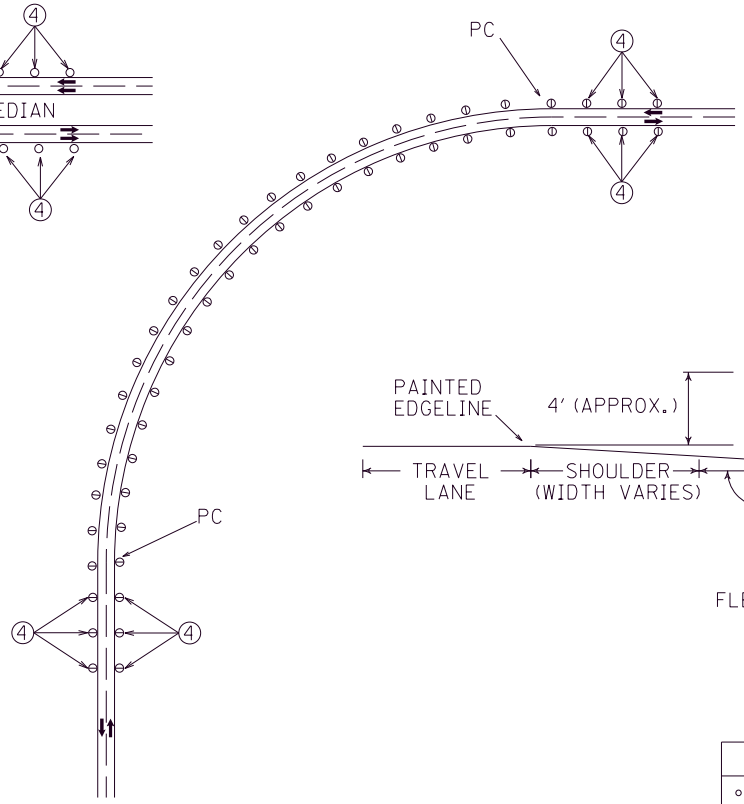

DELINEATION FOR HORIZONTAL CURVES
ON TWO-LANE EXPRESSWAYS/FREEWAYS

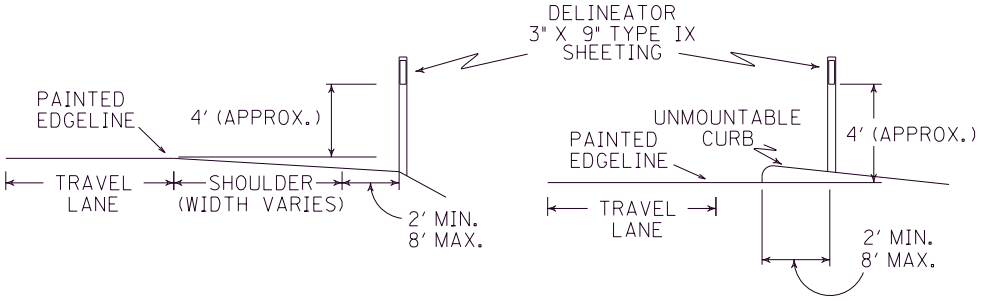

FLEXIBLE DELINEATOR POST
MOUNTING DETAILS

LEGEND	
○	FLEXIBLE DELINEATOR POST - M/W (MONO-WHITE)
⊖	FLEXIBLE DELINEATOR POST - B/W (BI-WHITE)
APPROX. SPACING = 50 FEET	
UNIT BID = EACH	

GENERAL NOTES

1. DELINEATORS SHALL BE FROM THE LIST OF APPROVED MATERIALS AND SHALL BE IN ACCORDANCE WITH SECTION 838 OF THE STANDARD SPECIFICATIONS FOR ROAD AND BRIDGE CONSTRUCTION, CURRENT EDITION.
2. DELINEATORS SHALL BE INSTALLED IN ACCORDANCE WITH THE MANUFACTURER'S RECOMMENDATIONS.
3. THE DELINEATOR POST AND RETROREFLECTIVE SHEETING SHALL BE THE SAME COLOR AND SHALL MATCH THE COLOR OF THE EDGELINES THEY SUPPLEMENT.
4. THREE DELINEATORS SHOULD BE INSTALLED IN ADVANCE OF THE BEGINNING AND PROCEEDING AWAY FROM THE END OF THE CURVE AT A SPACING OF APPROXIMATELY 50 FEET.
5. DELINEATORS SHALL BE PROVIDED ON THE RIGHT-HAND SIDE OF HORIZONTAL CURVES ON EXPRESSWAYS AND FREEWAYS. DELINEATORS ARE NOT REQUIRED ON TANGENT SECTIONS OF EXPRESSWAYS AND FREEWAYS.
6. A FREEWAY SHALL BE DEFINED AS A DIVIDED HIGHWAY WITH FULL CONTROL OF ACCESS. AN EXPRESSWAY SHALL BE DEFINED AS A DIVIDED HIGHWAY WITH PARTIAL CONTROL OF ACCESS.
7. DELINEATORS SHOULD BE PLACED AT A CONSTANT DISTANCE FROM THE ROADWAY EDGE. WHEN AN OBSTRUCTION EXISTS NEAR THE PAVEMENT EDGE, THE LINE OF DELINEATORS SHOULD BE TRANSITIONED TO THE INSIDE OF THE OBSTRUCTION OR TO THE BARRIER DELINEATION IF THE OBSTRUCTION IS GUARDRAIL OR BARRIER WALL. SUCH TRANSITIONS SHOULD BEGIN APPROXIMATELY 200 FT IN ADVANCE OF THE OBSTRUCTION/BARRIER.
8. DELINEATORS SHOULD BE INSTALLED AT AN APPROXIMATE RIGHT ANGLE TO APPROACHING TRAFFIC.
9. DELINEATORS MAY BE DISCONTINUED ALONG SECTIONS WITH BARRIER WALL OR GUARDRAIL DELINEATION.

DRAWING NOT TO SCALE

KENTUCKY DEPARTMENT OF HIGHWAYS

FLEXIBLE DELINEATOR POST ARRANGEMENTS FOR HORIZONTAL CURVES

SUBMITTED R. Jeffrey Wolfe 8-29-13 DATE

018

COUNTY OF	ITEM NO.	SHEET NO.
CALDWELL/ HOPKINS	2-2075	

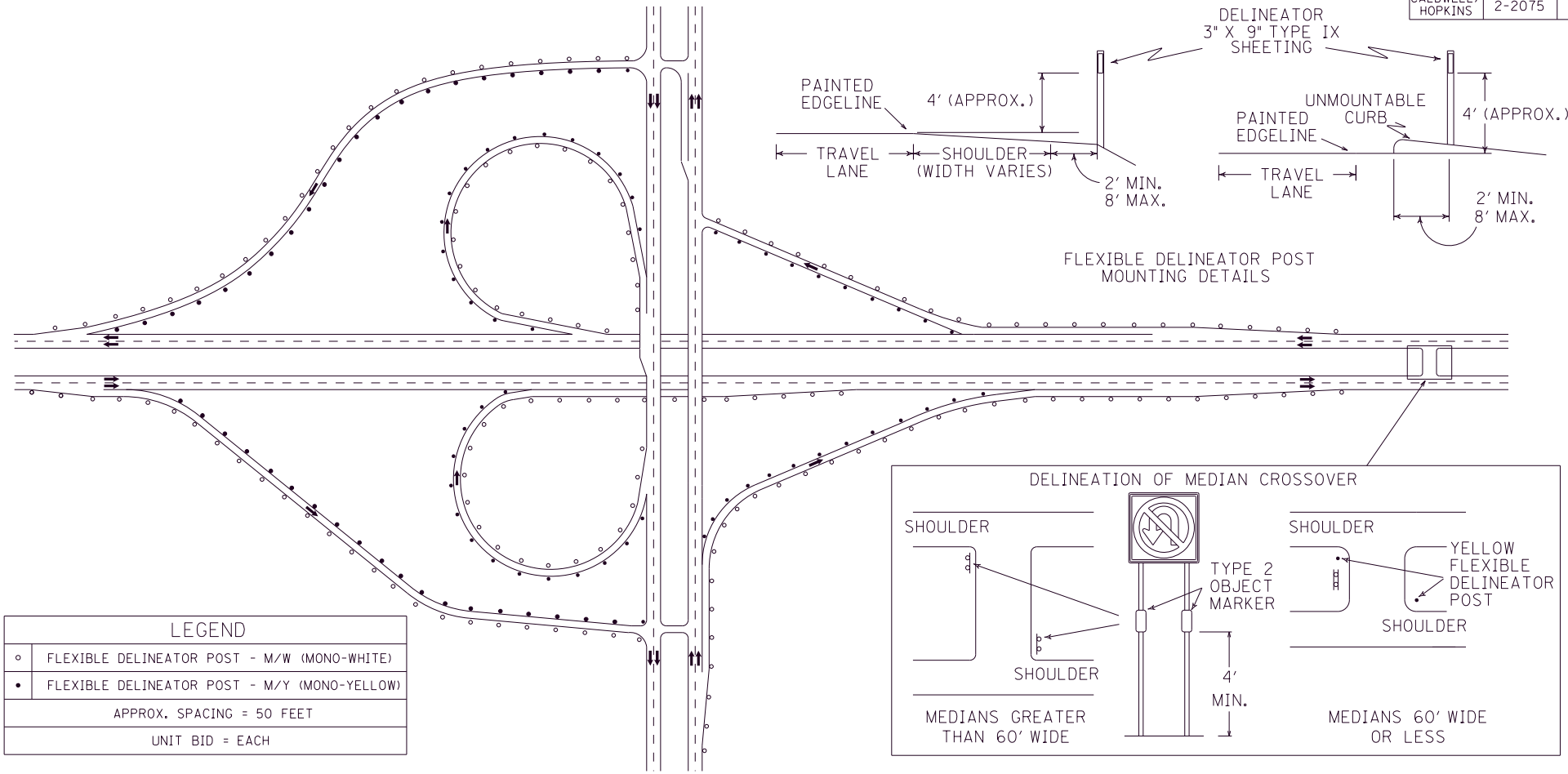

LEGEND	
○	FLEXIBLE DELINEATOR POST - M/W (MONO-WHITE)
•	FLEXIBLE DELINEATOR POST - M/Y (MONO-YELLOW)
APPROX. SPACING = 50 FEET	
UNIT BID = EACH	

GENERAL NOTES

1. DELINEATORS SHALL BE FROM THE LIST OF APPROVED MATERIALS AND SHALL BE IN ACCORDANCE WITH SECTION 838 OF THE STANDARD SPECIFICATIONS FOR ROAD AND BRIDGE CONSTRUCTION, CURRENT EDITION.
2. DELINEATORS SHALL BE INSTALLED IN ACCORDANCE WITH THE MANUFACTURER'S RECOMMENDATIONS.
3. THE DELINEATOR POST AND RETROREFLECTIVE SHEETING SHALL BE THE SAME COLOR AND SHALL MATCH THE COLOR OF THE EDGELINES THEY SUPPLEMENT.
4. DELINEATORS SHOULD BE PROVIDED ON BOTH SIDES OF INTERCHANGE RAMPS. DELINEATORS SHOULD BE ERECTED AT 50 FOOT INTERVALS ALONG RAMPS AND ACCELERATION AND DECELERATION LANES ON THE MAINLINE AND CROSSROAD.
5. DELINEATORS SHOULD BE PLACED AT A CONSTANT DISTANCE FROM THE ROADWAY EDGE. WHEN AN OBSTRUCTION EXISTS NEAR THE PAVEMENT EDGE, THE LINE OF DELINEATORS SHOULD BE TRANSITIONED TO THE INSIDE OF THE OBSTRUCTION OR TO THE BARRIER DELINEATION IF THE OBSTRUCTION IS GUARDRAIL OR BARRIER WALL. SUCH TRANSITIONS SHOULD BEGIN APPROXIMATELY 200 FEET IN ADVANCE OF THE OBSTRUCTION/BARRIER.
6. DELINEATORS SHOULD BE INSTALLED AT AN APPROXIMATE RIGHT ANGLE TO APPROACHING TRAFFIC.
7. DELINEATORS MAY BE DISCONTINUED ALONG SECTIONS WITH BARRIER WALL OR GUARDRAIL DELINEATION.

DRAWING NOT TO SCALE

KENTUCKY DEPARTMENT OF HIGHWAYS

FLEXIBLE DELINEATOR POST ARRANGEMENTS FOR INTERCHANGE RAMPS AND CROSSOVERS

SUBMITTED R. Jeffrey Wolfe 8-29-13 DATE

019

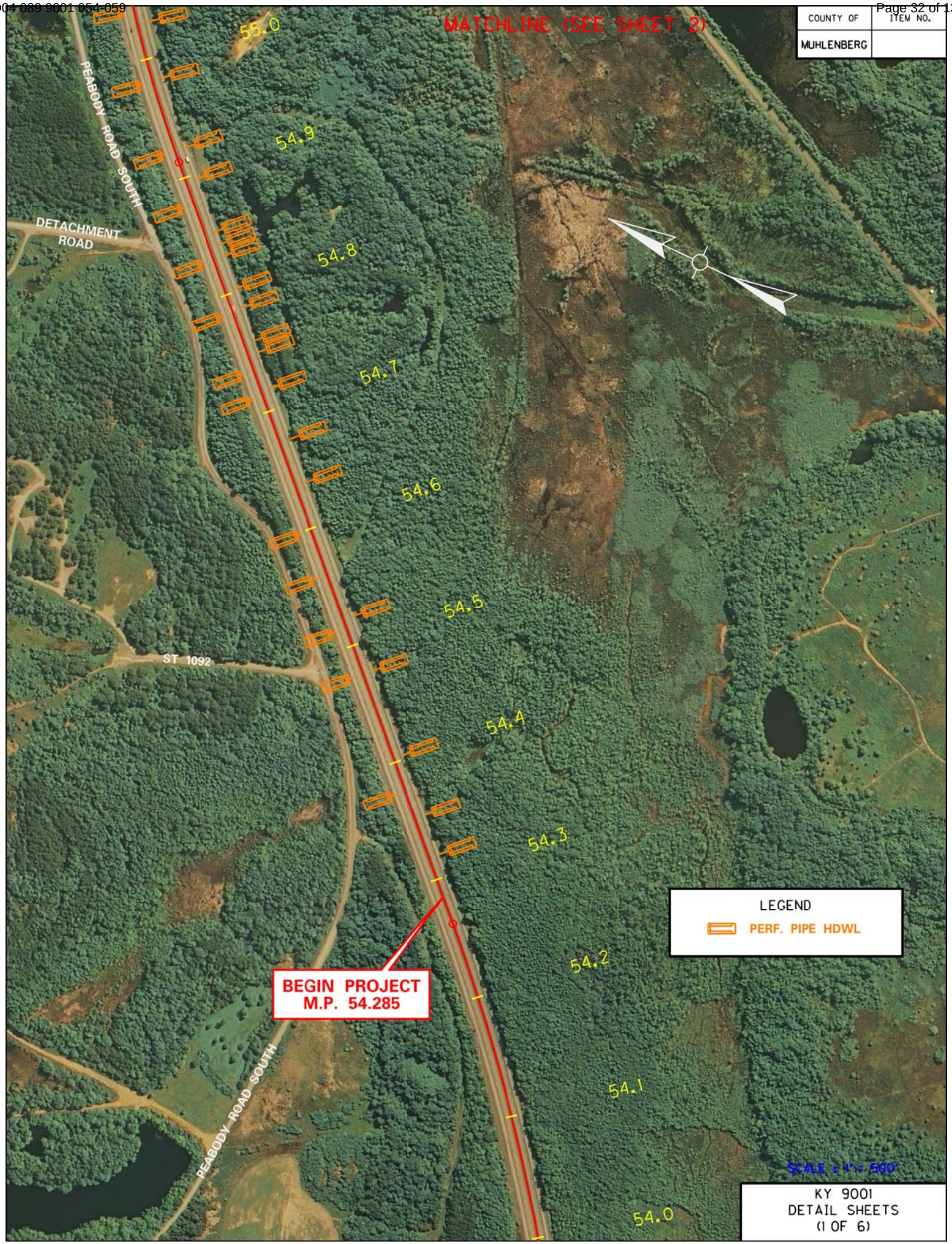
COUNTY OF
MUHLENBERG
ITEM NO.
MATCHLINE (SEE SHEET 2)
55.0
54.9
54.8
54.7
54.6
54.5
54.4
54.3
54.2
54.1
54.0
PEABODY ROAD SOUTH
DETACHMENT ROAD
ST 1092
BEGIN PROJECT
M.P. 54.285
LEGEND
PERF. PIPE HDWL
SCALE : 1" = 500'
KY 9001
DETAIL SHEETS
(1 OF 6)

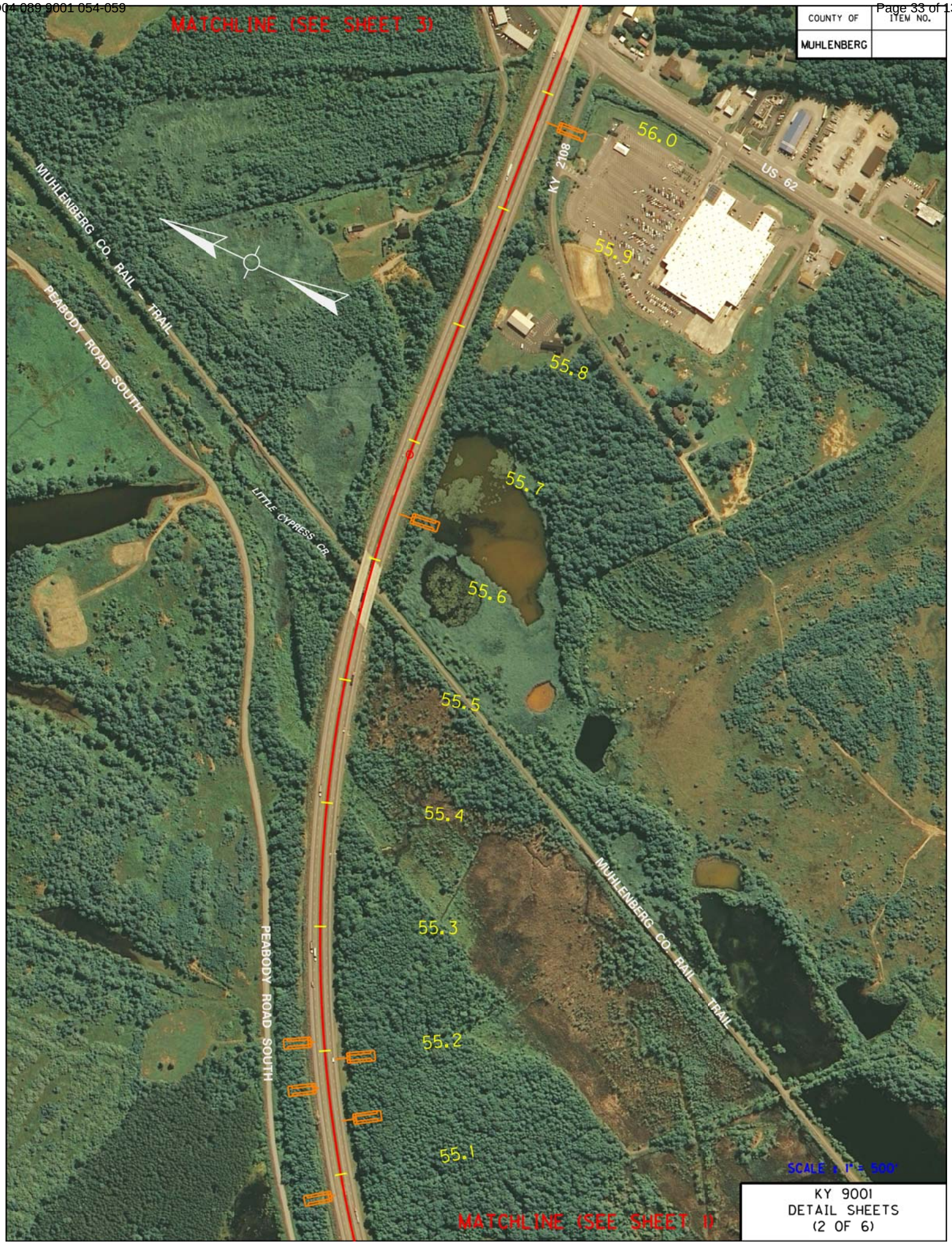

KY 9001
DETAIL SHEETS
(2 OF 6)

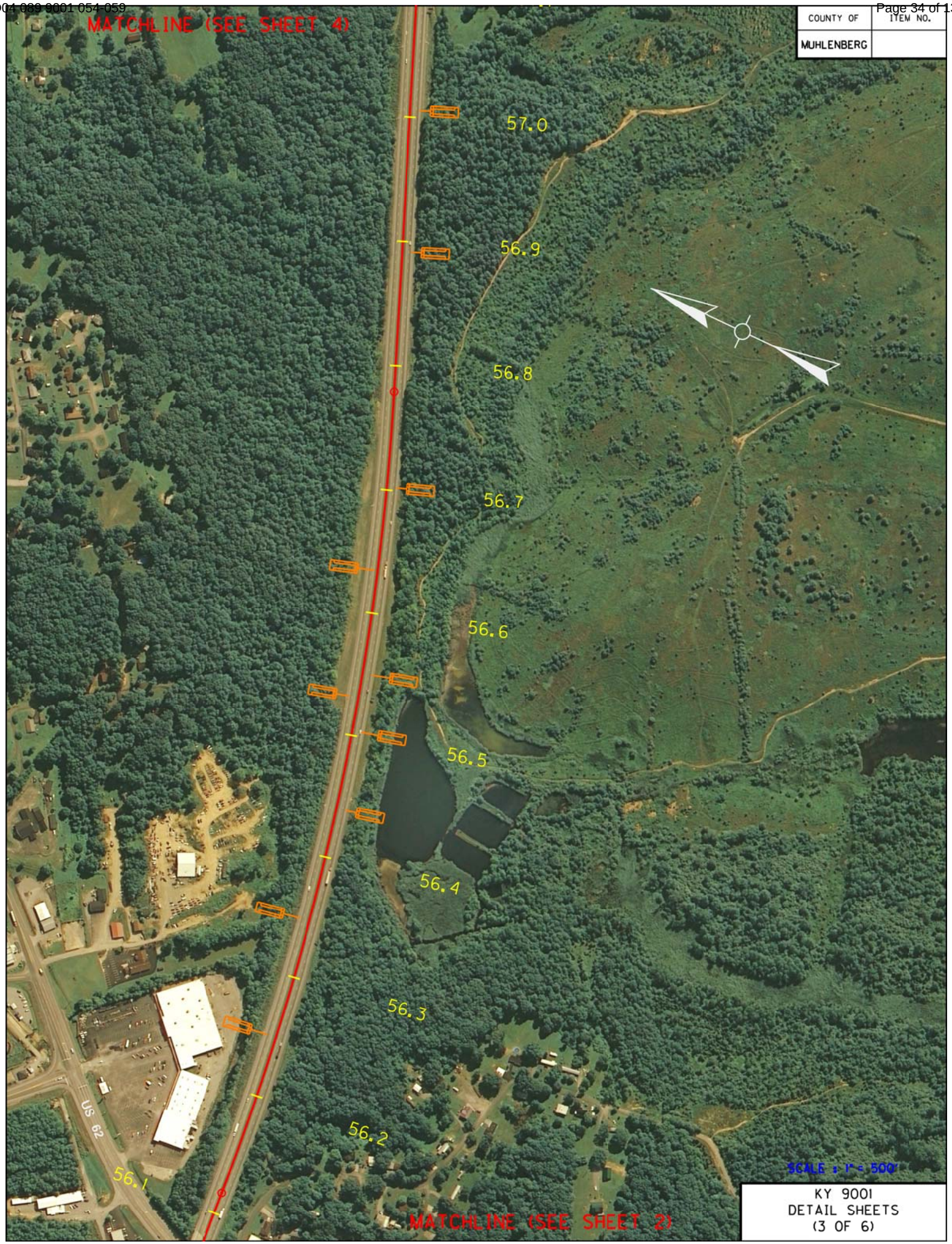

KY 9001
DETAIL SHEETS
(3 OF 6)

KY 9001
DETAIL SHEETS
(4 OF 6)

MATCHLINE (SEE SHEET 6)
COUNTY OF
MUHLENBERG
ITEM NO.
US 62
59.1
59.0
58.9
58.8
58.7
58.6
58.5
58.4
58.3
58.2
KY 604
US 62
SCALE : 1" = 500'
MATCHLINE (SEE SHEET 4)
KY 9001
DETAIL SHEETS
(5 OF 6)

COUNTY OF
MUHLENBERG
ITEM NO.
60.2
60.1
60.0
59.9
59.8
59.7
59.6
59.5
59.4
59.3
59.2
END PROJECT
M.P. 59.92
US 62
CLEATON GREEN RIVER RD.
MATCHLINE (SEE SHEET 5)
SCALE = 1" = 500'
KY 9001
DETAIL SHEETS
(6 OF 6)

MUHLENBERG CO.
WESTERN KENTUCKY PARKWAY
MP 54.285 TO MP 59.92 EB & WB LANES
Item No. 2-2077

THIS PROJECT IS A FULLY CONTROLLED ACCESS HIGHWAY

I. DESCRIPTION

Perform all work in accordance with the Department's 2012 Standard Specifications, Supplemental Specifications, applicable Special Provisions, and applicable Standard and Sepia Drawings, except as hereafter specified. Article references are to the Standard Specifications. Furnish all materials, labor, equipment, and incidentals for the following work:

Eastbound and Westbound Traffic Lanes and Shoulders:

(1) Maintain and Control Traffic; (2) Remove and replace Damaged Guardrail, (3) Type V pavement markers and Durable Waterborne Markings;(4) Asphalt Pavement Milling and Texturing; (5) Asphalt Surface (6) Pavement Repairs, (7) Inspection and / or replacement of existing edge drain system and (9) Cross slope correction, (10) All other work specified as part of this contract.

II. MATERIALS

Except as specified in these notes or on the drawings, all materials will be according to the Standard Specifications and applicable Special Provisions and Special Notes. The Department will sample and test all materials according to Department's Sampling Manual and the Contractor will have the materials available for sampling a sufficient time in advance of the use of the materials to allow for the necessary time for testing, unless otherwise specified in these notes.

A. **Maintain and Control Traffic.** See Traffic Control Plan.

B. **DGA Base.** Crushed Stone Base shall not be used in lieu of DGA Base on this project.

C. **Pavement Markings -6 inch.** Use Durable Waterbourne Markings 6-inch for permanent striping (12 inch at entrance and exit ramp tapers).

D. **Crushed Aggregate Size No. 2.** Crushed Aggregate Size No. 2 will be limestone.

E. **Channel Lining Class II & III.** Channel lining will be limestone and is to be placed at pipe outlets with significant erosion and in ditch repair locations as directed by the Engineer.

F. **Erosion Control Blanket.** Erosion control blanket is to be placed in all ditching areas when ditching is complete, on slope stabilization areas, or as directed by the Engineer. Use Seed Mixture No. 1

III. CONSTRUCTION METHODS

A. **Maintain and Control Traffic.** See Traffic Control Plan.

B. **Site Preparation.** Be responsible for all site preparation. Do not disturb existing signs. This item will include, but is not limited to, incidental excavation and backfilling; removal of all obstructions or any other items; disposal of materials; sweeping and removal of debris; shoulder preparation and restoration, temporary and permanent erosion and pollution control; and all incidentals. Site preparation will be only as approved or directed by the Engineer. Other than the bid items listed, no direct payment will be made for site preparation, but will be incidental to the other items of work.

C. **Disposal of Waste.** Dispose of all debris and other waste off the right-of-way at approved sites obtained by the Contractor at no additional cost to the Department. The contractor will be responsible for obtaining any necessary permits for this work. Temporary openings in the right of way fence for direct access to waste sites off the right of way or for access to other public roads will not be allowed. No separate payment will be made for the disposal of waste and debris from the project or obtaining the necessary permits, but will be incidental to the other items of the work.

D. **Final Dressing, Clean Up, and Seeding and Protection.** After all work is completed, completely remove all debris from the job site. Perform Class A Final Dressing on all disturbed areas. Sow disturbed earthen areas with Seed Mixture No. I. These items are incidental to other items in the contract.

E. **Guardrail.** Remove and replace or remove and reset guardrail and guardrail End Treatments listed in the Guardrail Summary or as directed by the Engineer. Quantities are approximate only. Actual locations will be determined by the Engineer at the time of construction. Grade and reshape shoulders to proper template for new End Treatment. Utilize DGA for embankment when required for new end treatments. Remove existing guardrail with a lane closure in place. Do not leave the area unprotected. After the guardrail is removed, a shoulder closure shall remain in place until the guardrail is replaced in that area.

F. **Pavement Striping and Pavement Markers.** Permanent striping will be in accordance with Section 112, except that:

(1). Striping will be 6" in width, except 12" in gore area;
(2). Permanent or temporary striping will be in place before a lane is opened to traffic; and
(3). Permanent striping will be Durable Waterborne Markings.
(4.) Pavement Markers shall be installed per Std. Drwg.TPM 105-02 Arrangement "C" and Std. Drawing TPM 125-02.

G. **On-Site Inspection.** Each Contractor submitting a bid for this work will make a thorough inspection of the site prior to submitting a bid and will thoroughly familiarize himself with existing conditions so that the work can be expeditiously performed after a contract is awarded. Submission of a bid will be considered evidence of this inspection having been made. Any claims resulting from site conditions will not be honored by the Department.

H. **Caution:** Information shown on the drawings and in this proposal and the types and quantities of work listed are not to be taken as an accurate or complete evaluation of the material and conditions to be encountered during construction. The bidder must draw his own conclusions as to the conditions encountered. The Department does not give any guarantee as to the accuracy of the data and no claim will be considered for additional compensation if the conditions encountered are not in accordance with the information above.

I. **Utility Clearance.** It is not anticipated that utility facilities will need to be relocated and/or adjusted; however, in the event that it is discovered that the work does require that utilities be relocated and/or adjusted, the utility companies will work concurrently with the Contractor while relocating their facilities.

J. **Inspect and Certify Edge Drain System.** The "lump sum" bid item for Inspect and Certify Edge Drain System shall include the initial inspection for damaged or clogged sections in determining the replacement areas. After completion of the replacement pipe the new sections shall be inspected and certified. All existing perforated pipe headwalls are to be cleaned prior to the initial video inspection.

K. **Longitudinal Edge Drain System**. Existing 4" perforated pipe is located longitudinally on the inside and outside edge of pavement. The existing system shall be inspected and certified with the results provided to the Engineer. Removal and replacement shall be determined at that time by the Engineer. Quantities for 4" perforated and 4" non-perforated pipe along with perforated pipe headwalls have been estimated and are included in the proposal. Outlet locations shall be placed where existing headwalls are located. Use existing perforated pipe headwalls when possible. Payment for connecting to existing headwalls shall not be made and considered incidental to 4" non-perforated pipe. Asphalt quantities have been included for the trench cap.

L. **Grouted Channel Lining.** Grouted Class III Channel Lining shall be installed under the eastbound end bent at MP 58.53.Existing channel lining shall be removed. Class B Concrete shall be used for grout – Thickness – 2’, Depth to Protect – 1.5’.

IV. METHOD OF MEASUREMENT

A. **Maintain and Control Traffic.** See Traffic Control Plan.

B. **Site Preparation.** Other than the bid items listed, site preparation will not be measured for payment, but will be incidental to the other items of work.

C. **Crushed Aggregate Size No. 2.** Payment will be based on the tons used around the perforated pipe outlet headwalls, erosion around pipe inlets and outlets, washouts behind guardrail and other areas as directed by the Engineer.

D. **Raised Pavement Markers and Permanent Striping.** Permanent striping Durable Waterborne Markings (6" and 12") is measured per linear foot. See Traffic Control Plan. Type V Pavement Markers are measured as each. No direct payment will be made for the removal of the existing pavement markers prior to the milling operation and shall be considered incidental to milling and texturing.

E. **Erosion Control.** Erosion control items are not listed as bid items and will not be measured for payment, but will be considered incidental to the “lump sum” price for the bid item “KPDES Permit and Temporary Erosion Control”.

F. **Erosion Control Blanket.** Erosion Control Blanket is measured by square yard.

G. **Flowable Fill.** Quantities of flowable fill have been included in the proposal to fill the undercut voids for headwalls and flumes or as directed by the Engineer.

H. **Asphalt Wedge Curb.** Quantities for Asphalt Wedge Curb have been included in the proposal to replace damaged wedge curb throughout the project or in additional washout areas as directed by the Engineer. Wedge curb removal shall be incidental to asphalt wedge curb.

I. **Remove Existing Paved Ditch.** The existing paved ditch at MP 57.97 (Ramp C), 25’ length, shall be removed and replaced with class II channel lining. Quantities for remove paved ditch and class II channel lining have been included in the general summary.

J. **Shoulder Drop-offs**. Asphalt millings shall be used to bring the drop-offs at the edge of the paved shoulders back to existing grade of the finished surface. This will not be required where guardrail is present. Asphalt Seal Coat & Asphalt Seal Aggregate shall be required on the Asphalt Millings.

K. **Staking.** The bid item staking shall include construction methods of establishing the proposed cross slope in the correction area. The contractor shall provide an as built survey, based on assumed datum, verifying the accuracy of the proposed cross slopes.

V. BASIS OF PAYMENT

No direct payment will be made other than for the bid items listed. All other items required to complete the construction will be incidental to the bid items listed. Existing signs damaged by the Contractor will be replaced by the Contractor at his expense.

A. **Maintain and Control Traffic.** See Traffic Control Plan.

B. **Site Preparation.** Other than the bid items listed, no direct payment will be allowed for site preparation, but will be incidental to the other items of work.

C. **Crushed Stone Base.** See Section 302 of the Standard Specifications.

D. **Raised Pavement Markers and Permanent Striping.** See Traffic Control Plan

E. **Lane Closures.** Contrary to the specifications Lane Closures in operation for more than three days shall not be a bid item and shall be considered incidental to the bid item “Maintain and Control Traffic”. Arrow boards and signs shall be paid for one time regardless of how many times they are moved.

F. **Ditching and Shouldering.** In addition to Section 209 of the Standard Specifications the bid item “Ditching and Shouldering” shall include cleaning of all existing perforated pipe headwalls prior to the initial video inspection. The excavation and removal of shoulder material in shoulder repair areas is also included with this bid item.

L. **Remove Existing Paved Ditch.** The removal of the existing paved ditch shall be paid for as “square yards” and shall include the removal and disposal of the existing concrete off the project limits. At the direction of the Engineer the concrete ditch may be broken up in place and voids filled with class III channel lining.+

M. **Milling and Texturing.** Milling and texturing will be paid for per section 408.05 of the 2012 Standard Specifications. No direct payment will be made for stockpiling, reloading and placing the milled material in areas specified in the proposal.

N. **Cleaning and Sweeping.** Remove and dispose of all debris in wedge curb areas where standing water has left debris in the gutter line of the wedge curb. All bridge decks are also included.

NOTES APPLICABLE TO PROJECT

MUHLENBERG CO.
WESTERN KENTUCKY PARKWAY
MP 54.285 TO MP 59.92 EB & WB LANES
Item No. 2-2077

1. There is a summary of pavement repair locations on the pavement repair detail sheet. The Engineer will determine the ultimate locations that will be repaired based upon the condition of the pavement at the time the repairs are accomplished. The repair locations listed may be lengthened, shortened, or eliminated completely if the conditions are such that modification of the locations would be deemed desirable by the Department.

2. The dimensions shown on the typical section for pavement and shoulder widths and thickness are nominal or typical dimensions. The actual dimensions to be constructed may be varied to fit existing conditions as directed or approved by the Engineer. It is not intended that existing pavement or shoulders be widened unless otherwise specified in the Proposal.

3. The contractor is to be advised of the locations of overhead utility wires on the project. The following locations are approximate:

   MP 55.42
   MP 55.93
   MP 57.45
   MP 58.32
   MP 55.95

CAUTION: Other overhead utility locations may exist. These and all other utilities should be avoided on this project. If any utility is impacted, it will be the contractor's responsibility to contact the affected utility and cover any costs associated with the impact.

CAUTION: The contractor is advised that underground utilities, including KYTC facilities, may exist on the project.
All utilities should be avoided on this project. If any utility is impacted, it will be the contractor's responsibility to contact the affected utility and cover any costs associated with the impact.

4. Milepost 55 shall be replaced in its current location. The remaining mileposts shall be field measured and set based on MP 55.

5. All damaged Guardrail will be replaced with this project. The location of new guardrail and end treatments are listed by milepoints. Exact placement is to be approved by the Engineer during construction. Guardrail installation is to take place one week after the general milling & filling paving operations are completed. Remove any existing guardrail with a lane closure in place. Do not leave the area unprotected. After the guardrail is removed, a shoulder closure shall remain in place until the guardrail is replaced in that area. A maximum of seven calendar days will be allowed between the removal of a guardrail section and the installation of new guardrail at that same location. Guardrail shall be removed and reset in shoulder repair and slope correction areas.

   Contrary to KYTC Standard Drawing RBR-020-05 the guardrail end treatment ET-Plus manufactured by Trinity Industries will not be permitted as an option for bid item “Guardrail End Treatment Type 1”.

6. The Contractor shall deliver existing salvaged guardrail system materials to the Central Sign Shop and Recycle center at 1224 Wilkinson Blvd in Frankfort, KY. Contact Section Supervisor at (502) 564-8187 to schedule the delivery of material. Deliver the material between the hours of 8:00AM and 3:30PM, Monday through Friday. There is a guardrail delivery verification sheet which must be completed and signed by the Contractor, Engineer and a representative of the Central Sign Shop and Recycle Center

7. Quantities for Crushed Aggregate No.2, Channel Lining Class II & Channel Lining Class III have been included to be used at eroded areas around drainage outlets / inlets, shoulder washouts behind the guardrail and other areas as directed by the Engineer. Geotextile Fabric Type I will not be measured for payment and will be considered incidental to channel lining.

8. Any roadway signs that are damaged during construction are to be replaced at the contractor's expense.

9. Cross slope corrections shall be made at WB MP 55.68 to MP 55.75. Plan sheet, typical section and cross sections at 20 foot intervals have been included elsewhere in the proposal. This area shall be milled 1 ½” prior to constructing the leveling and wedging course.

REFERENCES

1. Kentucky Transportation Cabinet, Department of Highways, Standard Specifications for Road and Bridge Construction, Edition of 2012.

2. FHWA Manual on Uniform Traffic Control Devices – 2009 Edition.

3. Kentucky Department of Highways Standard Drawings, Edition 2012, as applicable:

RBI-001-10	TYPICAL GUARDRAIL INSTALLATIONS
RBI-002-06	TYPICAL GUARDRAIL INSTALLATIONS
RBR-005-10	GUARDRAIL COMPONENTS
RBR-010-05	GUARDRAIL TERMINAL SECTIONS
RBR-015-04	GUARDRAIL POSTS
RBR-016-04	GUARDRAIL POSTS
RDD 030-07	CHANNEL LINING CLASS 1A
RDD-040-04	CHANNEL LINING CLASS II AND III
RDP-001-05	PERFORATED PIPE TYPES AND COVER HEIGHTS
RDP-010-08	PERFORATED PIPE HEADWALLS
RDX-210-02	TEMPORARY SILT FENCE
RDX-220-04	SILT TRAP - TYPE A
RDX-225	SILT TRAP - TYPE B
RDX-230	SILT TRAP - TYPE C
TPM-105-02	PAVEMENT MARKER ARRANGEMENTS MULTI-LANE ROADWAYS
TPM-125-02	PAVEMENT MARKER ARRANGEMENT EXIT-GORE AND OFF-RAMP
TPM-135-02	PAVEMENT MARKER ARRANGEMENT ON-RAMP WITH PARALLEL ACCELERATION LANE
TTC-115-02	LANE CLOSURE MULTI-LANE HIGHWAY CASE I
TTC-135-01	SHOULDER CLOSURE
TTD-110-01	POST SPLICING DETAIL
TTD-120-01	WORK ZONE SPEED LIMIT AND DOUBLE FINE SIGNS
TTD-125-01	PAVEMENT CONDITION WARNING SIGNS
TTS-110-01	MOBILE OPERATION FOR PAINT STRIPING CASE III
TTS-115-01	MOBILE OPERATION FOR PAINT STRIPING CASE IV
TTS-120-01	MOBILE OPERATION FOR DURABLE STRIPING CASE 1

4. Kentucky Transportation Cabinet, Department of Highways, Standard Specifications for Road and Bridge Construction, Edition of 2012, Appendix B - Supplemental Specifications, as applicable:

Special Note	Typical Section Dimensions *attached*
Special Note	Portable Changeable Message Signs *attached*
Special Note	Before You Dig *attached*
Special Note	Guardrail Delivery Verification Sheet *attached*
Special Note	Fixed Completion Date and Liquidated Damages *attached*
Special Note	Erosion Prevention and Sediment Control *attached*
General Note	Asphalt Pavement Ride Quality *attached*
General Note	Compaction of Asphalt Mixtures *attached*
Special Note	Asphalt Milling and Texturing *attached*
Special Note	Longitudinal Pavement Joint Adhesive *attached*

SPECIAL NOTE FOR TYPICAL SECTION DIMENSIONS

WESTERN KENTUCKY PARKWAY
MUHLENBERG CO.
ITEM NO. 2-2077

The dimensions shown on the typical sections for pavement and shoulder widths are nominal or typical dimensions. The actual dimensions to be constructed may be varied to fit existing conditions as directed or approved by the Engineer. It is not intended that existing pavement or shoulders be widened unless specified elsewhere in the Proposal.

SPECIAL NOTE FOR PORTABLE CHANGEABLE MESSAGE SIGNS

WESTERN KENTUCKY PARKWAY
MUHLENBERG CO.
ITEM NO. 2-2077

1.0 DESCRIPTION. Furnish, install, operate, and maintain variable message signs at the locations shown on the plans or designated by the Engineer. Remove and retain possession of variable message signs when they are no longer needed on the project.

2.0 MATERIALS.

2.1 General. Use LED Variable Message Signs Class I, II, or III, as appropriate, from the Department's List of Approved Materials.

Unclassified signs may be submitted for approval by the Engineer. The Engineer may require a daytime and nighttime demonstration. The Engineer will make a final decision within 30 days after all required information is received.

2.2 Sign and Controls. All signs must:

1) Provide 3-line messages with each line being 8 characters long and at least 18 inches tall. Each character comprises 35 pixels.
2) Provide at least 40 preprogrammed messages available for use at any time. Provide for quick and easy change of the displayed message; editing of the message; and additions of new messages.
3) Provide a controller consisting of:
   a) Keyboard or keypad.
   b) Readout that mimics the actual sign display. (When LCD or LCD type readout is used, include backlighting and heating or otherwise arrange for viewing in cold temperatures.)
   c) Non-volatile memory or suitable memory with battery backup for storing pre-programmed messages.
   d) Logic circuitry to control the sequence of messages and flash rate.
4) Provide a serial interface that is capable of supporting complete remote control ability through land line and cellular telephone operation. Include communication software capable of immediately updating the message, providing complete sign status, and allowing message library queries and updates.
5) Allow a single person easily to raise the sign to a satisfactory height above the pavement during use, and lower the sign during travel.
6) Be Highway Orange on all exterior surfaces of the trailer, supports, and controller cabinet.
7) Provide operation in ambient temperatures from -30 to + 120 degrees Fahrenheit during snow, rain and other inclement weather.
8) Provide the driver board as part of a module. All modules are interchangeable, and have plug and socket arrangements for disconnection and reconnection. Printed circuit boards

associated with driver boards have a conformable coating to protect against moisture.

9) Provide a sign case sealed against rain, snow, dust, insects, etc. The lens is UV stabilized clear plastic (polycarbonate, acrylic, or other approved material) angled to prevent glare.
10) Provide a flat black UV protected coating on the sign hardware, character PCB, and appropriate lens areas.
11) Provide a photocell control to provide automatic dimming.
12) Allow an on-off flashing sequence at an adjustable rate.
13) Provide a sight to aim the message.
14) Provide a LED display color of approximately 590 nm amber.
15) Provide a controller that is password protected.
16) Provide a security device that prevents unauthorized individuals from accessing the controller.
17) Provide the following 3-line messages preprogrammed and available for use when the sign unit begins operation:

/KEEP/RIGHT/⇒⇒⇒/
/KEEP/LEFT/⇐⇐⇐/
/LOOSE/GRAVEL/AHEAD/
/RD WORK/NEXT/**MILES/
/TWO WAY/TRAFFIC/AHEAD/
/PAINT/CREW/AHEAD/
/REDUCE/SPEED/**MPH/
/BRIDGE/WORK/***0 FT/
/MAX/SPEED/**MPH/
/SURVEY/PARTY/AHEAD/
/MIN/SPEED/**MPH/
/ICY/BRIDGE/AHEAD/ /ONE
LANE/BRIDGE/AHEAD/
/ROUGH/ROAD/AHEAD/
/MERGING/TRAFFIC/AHEAD/
/NEXT/***/MILES/
/HEAVY/TRAFFIC/AHEAD/
/SPEED/LIMIT/**MPH/
/BUMP/AHEAD/
/TWO/WAY/TRAFFIC/

*Insert numerals as directed by the Engineer.

Add other messages during the project when required by the Engineer.

2.3 Power.

1) Design solar panels to yield 10 percent or greater additional charge than sign consumption. Provide direct wiring for operation of the sign or arrow board from an external power source to provide energy backup for 21 days without sunlight and an on-

board system charger with the ability to recharge completely discharged batteries in 24 hours.

3.0 CONSTRUCTION. Furnish and operate the variable message signs as designated on the plans or by the Engineer. Ensure the bottom of the message panel is a minimum of 7 feet above the roadway in urban areas and 5 feet above in rural areas when operating. Use Class I, II, or III signs on roads with a speed limit less than 55 mph. Use Class I or II signs on roads with speed limits 55 mph or greater.

Maintain the sign in proper working order, including repair of any damage done by others, until completion of the project. When the sign becomes inoperative, immediately repair or replace the sign. Repetitive problems with the same unit will be cause for rejection and replacement.

Use only project related messages and messages directed by the Engineer, unnecessary messages lessen the impact of the sign. Ensure the message is displayed in either one or 2 phases with each phase having no more than 3 lines of text. When no message is needed, but it is necessary to know if the sign is operable, flash only a pixel.

When the sign is not needed, move it outside the clear zone or where the Engineer directs. Variable Message Signs are the property of the Contractor and shall be removed from the project when no longer needed. The Department will assume ownership of these signs. The contractor shall deliver the VMS in new or like new condition to the District 2 Maintenance Garage (1840 N. Main St.).

4.0 MEASUREMENT. The final quantity of Variable Message Sign will be the actual number of individual signs acceptably furnished and operated during the project. The Department will not measure signs replaced due to damage or rejection.

5.0 PAYMENT. The Department will pay for the Variable Message Signs at the unit price each. The Department will not pay for signs replaced due to damage or rejection. Payment is full compensation for furnishing all materials, labor, equipment, and service necessary to, operate, move, repair, and maintain or replace the variable message signs. The Department will make payment for the completed and accepted quantities under the following:

Code	Pay Item	Pay Unit
02671	Portable Changeable Message Sign	Each

SPECIAL NOTE FOR BEFORE YOU DIG

WESTERN KENTUCKY PARKWAY
MUHLENBERG CO.
ITEM NO. 2-2077

Call 1-800-752-6007 toll free a minimum of two and no more than ten business days prior to excavation for information on the location of existing under-ground utilities which subscribe to the before-u-dig (BUD) service. Coordinate excavation with all utility owners, including those who do not subscribe to BUD.

GUARDRAIL DELIVERY VERIFICATION SHEET

Contract Id: _____ **Contractor:** _____

Section Engineer: _____ **District & County:** _____

DESCRIPTION	UNIT	QTY LEAVING PROJECT	QTY RECEIVED@BB YARD
GUARDRAIL (Includes End treatments & crash cushions)	LF	_____	_____
STEEL POSTS	EACH	_____	_____
STEEL BLOCKS	EACH	_____	_____
WOOD OFFSET BLOCKS	EACH	_____	_____
BACK UP PLATES	EACH	_____	_____
CRASH CUSHION	EACH	_____	_____
NUTS, BOLTS, WASHERS	BAG/BCKT	_____	_____
DAMAGED RAIL TO MAINT. FACILITY	LF	_____	_____
DAMAGED POSTS TO MAINT. FACILITY	EACH	_____	_____

****Required Signatures before Leaving Project Site***

Printed Section Engineer's Representative_____ & Date_____

Signature Section Engineer's Representative_____& Date_____

Printed Contractor's Representative_____& Date_____

Signature Contractor's Representative_____& Date_____

****Required Signatures after Arrival at Bailey Bridge Yard (All material on truck must be counted & the quantity received column completed before signatures)***

Printed Bailey Bridge Yard Representative_____ & Date_____

Signature Bailey Bridge Yard Representative_____& Date_____

Printed Contractor's Representative_____& Date_____

Signature Contractor's Representative_____& Date_____

**Payment for the bid item remove guardrail will be based upon the quantities shown in the Bailey Bridge Yard received column. Payment will not be made for guardrail removal until the guardrail verification sheets are electronically submitted to the Section Engineer by the Bailey Bridge Yard Representative.

Completed Form Submitted to Section Engineer Date: _____ By: _____

SPECIAL NOTE FOR FIXED COMPLETION DATE AND LIQUIDATED DAMAGES

WESTERN KENTUCKY PARKWAY
MUHLENBERG CO.
ITEM NO. 2-2077

Contrary to Section 108.09, Liquidated Damages of $5,000 per calendar day will be assessed for each day work remains uncompleted beyond the Specified Project Completion Date. This project has a Fixed Project Completion Date of July 31st, 2015.

Also contrary to Section 108, liquidate damages will be charged during the months of December through March.

SPECIAL NOTE FOR EROSION CONTROL AND SEDIMENTATION PREVENTION

WESTERN KENTUCKY PARKWAY
MUHLENBERG CO.
ITEM NO. 2-2077

The Contractor shall be responsible for filing the Kentucky Pollution Discharge Elimination System (KPDES) KYR10 permit Notice of Intent (NOI) with the Kentucky Division of Water (DOW) and any KPDES local Municipal Separate Storm Sewer System (MS4) program that has jurisdiction. The NOI shall name the contractor as the Facility Operator and include the KYTC Contract ID Number (CID) for reference.

The Contractor shall perform all temporary erosion/sediment control functions including: providing a Best Management Practice (BMP) Plan, conducting required inspections, modifying the BMP plan documents as construction progresses and documenting the installation and maintenance of BMPs in conformance with the KPDES KYR10 permit effective on August 1, 2009 or a permit re-issued to replace that KYR10 permit. This work shall be conducted in conformance with the requirements of Section 213 of KYTC 2008 Department of Highways, Standard Specifications for Road and Bridge Construction.

Contrary to Section 213.03.03, paragraph 2, the Engineer shall conduct inspections as needed to verify compliance with Section 213 of KYTC 2012 Department of Highways, Standard Specifications for Road and Bridge Construction. The Engineer's inspections shall be performed a minimum of once per month and within seven days after a storm of ½ inch or greater. Copies of the Engineer's inspections shall not be provided to the contractor unless improvements to the BMP's are required. The contractor shall initiate corrective action within 24 hours of any reported deficiency and complete the work within 5 days. The Engineer shall use Form TC 63-61 A for this report. Inspections performed by the Engineer do not relieve the Contractor of any responsibility for compliance with the KPDES permit.

Contrary to Section 213.05, bid items for temporary BMPs will not be listed and will be replaced with one lump sum item for the services. Payment will be pro-rated based on the Project Schedule as submitted by the Contractor and as agreed to by the Engineer.

The contractor shall be responsible for applying "good engineering practices" as required by the KPDES permit. The contractor may use any temporary BMPs with the approval of the KYTC Engineer.

The contractor shall provide the Engineer copies of all documents required by the KPDES permit at the time they are prepared.

The contractor shall be responsible for the examination of the soils to be encountered and make his own independent determination of the temporary BMPs that will be required to accomplish effective erosion prevention and sediment control.

The Contractor shall be responsible for filing the KPDES permit Notice of Termination (NOT) with the Kentucky DOW and any local MS4 program that has jurisdiction. The NOT shall be filed after the Engineer agrees that the project is stabilized or the project has been formally accepted.

Payment: Payment will be at the contract unit price for K.P.D.E.S Permit & Temporary Erosion Control: Lump Sum.

ASPHALT PAVEMENT RIDE QUALITY

WESTERN KENTUCKY PARKWAY
MUHLENBERG CO.
ITEM NO. 2-2077

Pavement Rideability Requirements, In accordance with Section 410 of the Standard Specifications for Road and Bridge Construction, Current Edition, shall apply on this project. Category A shall apply.

SPECIAL NOTE FOR COMPACTION OF ASPHALT MIXTURES

WESTERN KENTUCKY PARKWAY
MUHLENBERG CO.
ITEM NO. 2-2077

Will accept the compaction of asphalt mixtures furnished for the driving lanes and ramps at one inch or greater on this project by Option A according to subsections 402 and 403 of the standard specifications, current edition. Use joint cores as described in subsection 402.03.02 for surface mixtures only. Will accept the compaction of all other asphalt mixtures by option B.

SPECIAL NOTE FOR
ASPHALT MILLING AND TEXTURING

WESTERN KENTUCKY PARKWAY
MUHLENBERG CO.
ITEM NO. 2-2077

Begin paving operations immediately after the commencement of the asphalt milling operation. Continue paving operations continuously until completed. Do not allow public traffic to drive on the milled surface. If paving operations are not begun within this time period, liquidated damages will be assessed at the rate prescribed by Section 108.09 of the current Standard Specifications until such time as paving operations are begun.

In addition to the asphalt millings for the shoulder drop-off the contractor shall deliver 10,000 tons to the new KYTC maintenance facility in Muhlenberg County.
The Contractor will take possession of the remainder of the millings and recycle the millings or dispose of the millings off the Right-of-Way at sites obtained by the Contractor at no additional cost to the Department.

Removal of the existing pavement markers prior to the milling operation is considered incidental to the bid item “Asphalt Pavement Milling and Texturing”.

11N

SPECIAL NOTE FOR LONGITUDINAL PAVEMENT JOINT ADHESIVE

1. DESCRIPTION. This specification covers the requirements and practices for applying an asphalt adhesive material to the longitudinal joint of the surface course of an asphalt pavement. Apply the adhesive to the face of longitudinal joint between driving lanes for the first lane paved. Then, place and compact the adjacent lane against the treated face to produce a strong, durable, waterproof longitudinal joint.

2. MATERIALS, EQUIPMENT, AND PERSONNEL.

2.1 Joint Adhesive. Provide material conforming to Subsection 2.1.1.

2.1.1 Provide an adhesive conforming to the following requirements:

Property	Specification	Test Procedure
Viscosity, 400 ° F (Pa·s)	4.0 – 10.0	ASTM D 4402
Cone Penetration, 77 ° F	60 – 100	ASTM D 5329
Flow, 140 ° F (mm)	5.0 max.	ASTM D 5329
Resilience, 77 ° F (%)	30 min.	ASTM D 5329
Ductility, 77 ° F (cm)	30.0 min.	ASTM D 113
Ductility, 39 ° F (cm)	30.0 min.	ASTM D 113
Tensile Adhesion, 77 ° F (%)	500 min.	ASTM D 5329, Type II
Softening Point, ° F	171 min.	AASHTO T 53
Asphalt Compatibility	Pass	ASTM D 5329

Ensure the temperature of the pavement joint adhesive is between 380 and 410 °F when the material is extruded in a 0.125-inch-thick band over the entire face of the longitudinal joint.

2.2. Equipment.

2.2.1 Melter Kettle. Provide an oil-jacketed, double-boiler, melter kettle equipped with any needed agitation and recirculating systems.

2.2.2 Applicator System. Provide a pressure-feed-wand applicator system with an applicator shoe attached.

2.3 Personnel. Ensure a technical representative from the manufacturer of the pavement joint adhesive is present during the initial construction activities and available upon the request of the Engineer.

3. CONSTRUCTION.

3.1 Surface Preparation. Prior to the application of the pavement joint adhesive, ensure the face of the longitudinal joint is thoroughly dry and free from dust or any other debris that would inhibit adhesion. Clean the joint face by the use of compressed air.

Ensure this preparation process occurs shortly before application to prevent the return of debris on the joint face.

3.2 Pavement Joint Adhesive Application. Ensure the ambient temperature is a minimum of 40 ^{o} F during the application of the pavement joint adhesive. Prior to applying the adhesive, demonstrate competence in applying the adhesive according to this note to the satisfaction of the Engineer. Heat the adhesive in the melter kettle to the specified temperature range. Pump the adhesive from the melter kettle through the wand onto the vertical face of the cold joint. Apply the adhesive in a continuous band over the entire face of the longitudinal joint. Do not use excessive material in either thickness or location. Ensure the edge of the extruded adhesive material is flush with the surface of the pavement. Then, place and compact the adjacent lane against the joint face. Remove any excessive material extruded from the joint after compaction (a small line of material may remain).

3.3 Pavement Joint Adhesive Certification. Furnish the joint adhesive's certification to the Engineer stating the material conforms to all requirements herein prior to use.

3.4 Sampling and Testing. The Department will require a random sample of pavement joint adhesive from each manufacturer's lot of material. Extrude two 5 lb. samples of the heated material and forward the sample to the Division of Materials for testing. Reynolds oven bags, turkey size, placed inside small cardboard boxes or cement cylinder molds have been found suitable. Ensure the product temperature is 400°F or below at the time of sampling.

4. MEASUREMENT. The Department will measure the quantity of Pavement Joint Adhesive in linear feet. The Department will not measure for payment any extra materials, labor, methods, equipment, or construction techniques used to satisfy the requirements of this note. The Department will not measure for payment any trial applications of Pavement Joint Adhesive, the cleaning of the joint face, or furnishing and placing the adhesive. The Department will consider all such items incidental to the Pavement Joint Adhesive.

5. PAYMENT. The Department will pay for the Pavement Joint Adhesive at the Contract unit bid price and apply an adjustment for each manufacturer's lot of material based on the degree of compliance as defined in the following schedule. When a sample fails on two or more tests, the Department may add the deductions, but the total deduction will not exceed 100 percent.

11N

Pavement Joint Adhesive Price Adjustment Schedule						
Test	Specification	100% Pay	90% Pay	80% Pay	50% Pay	0% Pay
Joint Adhesive Referenced in Subsection 2.1.1						
Viscosity, 400 º F (Pa•s)			3.0-3.4	2.5-2.9	2.0-2.4	≤1.9
ASTM D 3236	4.0-10.0	3.5-10.5	10.6-11.0	11.1-11.5	11.6-12.0	≥ 12.1
Cone Penetration, 77 º F			54-56	51-53	48-50	≤ 47
ASTM D 5329	60-100	57-103	104-106	107-109	110-112	≥ 113
Flow, 140 º F (mm) ASTM D 5329	≤ 5.0	≤ 5.5	5.6-6.0	6.1-6.5	6.6-7.0	≥ 7.1
Resilience, 77 º F (%) ASTM D 5329	≥ 30	≥ 28	26-27	24-25	22-23	≤ 21
Tensile Adhesion, 77 º F (%) ASTM D 5329	≥ 500	≥ 490	480-489	470-479	460-469	≤ 459
Softening Point, º F AASHTO T 53	≥ 171	≥ 169	166-168	163-165	160-162	≤ 159
Ductility, 77 º F (cm) ASTM D 113	≥ 30.0	≥ 29.0	28.0-28.9	27.0-27.9	26.0-26.9	≤ 25.9
Ductility, 39 º F (cm) ASTM D 113	≥ 30.0	≥ 29.0	28.0-28.9	27.0-27.9	26.0-26.9	≤ 25.9

Code	Pay Item	Pay Unit
20071EC	Joint Adhesive	Linear Foot

May 7, 2014

TRAFFIC CONTROL PLAN

MUHLENBERG CO.
WESTERN KENTUCKY PARKWAY
MP 54.285 TO MP 59.92 EB & WB LANES
Item No. 2-2077

THIS PROJECT IS A FULLY CONTROLLED ACCESS HIGHWAY

TRAFFIC CONTROL GENERAL

Except as provided herein, “Maintain and Control Traffic” shall be in accordance with the 2012 Standard Specifications and the Standard Drawings, current editions. Except for the roadway and traffic control bid items listed, all items of work necessary to maintain and control traffic will be paid at the lump sum bid price to "Maintain and Control Traffic". All lane closures used on the Project will be in compliance with the appropriate Standard Drawings. Do NOT use cones for lane closures or shoulder closures.

Contrary to Section 106.01, traffic control devices used on this project may be new, or used in like new condition at the beginning of the work and maintained in like new condition until completion of the work. Traffic control devices will conform to current MUTCD.

Reduce the speed limit in work areas to 55 miles per hour (35 miles per hour for ramps) and establish double fines for work zone speeding violations. The extent of these areas within the project limits will be restricted to the proximity of actual work areas as determined by the Engineer. Notify the Engineer a minimum of 12 hours prior to using the double fine signs. At the beginning of the work zone, the “WARNING FINE DOUBLED IN WORK ZONE” signs will be dual mounted. At the end of the work zone, the “END DOUBLE FINE” signs will be dual mounted as well. Remove or cover the signs when the highway work zone does not have workers present for more than a two-hour period of time. Payment for the signs will be at the unit bid price for signs erected. Any relocation or covering of the signs will be incidental to “Maintain and Control Traffic,” lump sum.

Night work is allowed on this project. Obtain approval from the Engineer for the method of lighting prior to its use.

PROJECT PHASING & CONSTRUCTION PROCEDURES

Traffic may be reduced to one lane in each direction all times.

Approximate pavement repair locations are listed in the proposal. The Engineer will determine the exact location and dimensions at the time of construction. Once removal of pavement at a particular repair location has begun, work continuously to complete the work and eliminate the drop-off. Place Type III Barricades immediately in front of pavement removal areas. Type III Barricades will not be measured for payment and will be considered incidental to "Maintain and Control Traffic."

Access to all ramps at the US 431 interchange shall be maintained at all times unless otherwise directed by the Engineer. Mill and overlay the ramps in two passes allowing a minimum of one 11 foot lane. All diversions to access ramps in areas of lane closures shall be approved by the Engineer prior to implementing the particular lane closure

Maintain traffic as specified in the phasing notes and typical sections. Any other work not requiring traffic lane widths to be restricted due to barrels or equipment encroaching into the driving lanes can be done using a shoulder when two lanes of traffic must be maintained.

The contractor must notify the Engineer at least fourteen (14) days prior to the beginning of each construction phase in either direction.

SHOULDER PREPARATION AND RESTORATION

The clear lane width will be 12 feet; however, make provisions for the passage of wide loads up to 16'. Use a lane closure all times when work is performed in the lane or adjacent shoulder. Shoulders used as temporary roadways will be inspected by the Engineer and if deemed necessary by the Engineer, repaired with asphalt mixture for level & wedging as directed prior to opening to traffic. Perform any maintenance of the shoulder as deemed necessary by the Engineer in order to maintain traffic. Remove failed materials and perform additional patching as directed by the Engineer during the time the shoulder is used as a travel lane. Patch and remove any foreign debris on the shoulders as directed by the Engineer.
The shoulders are to be inspected and low spots refilled to the satisfaction of the Engineer prior to placing traffic on the shoulders. Daytime shoulder closures will be permitted to repair the stabilized shoulders. Install delineators for the existing guardrail and bridges before shifting traffic onto the shoulders. All work required for shoulder preparation and restoration is incidental to Maintenance of Traffic.

PHASE I (Pavement Repair Areas)

Install the lane closure per Std. Drawing TTC 115-02 closing the inside lane and diverting one lane of traffic to the outside lane as shown on the MOT typical section. While maintaining traffic on the outside lane construct the pavement repair areas as shown on the detail sheet at locations shown in the proposal and/or as directed by the Engineer.

PHASE II (Pavement Repair Areas)

Install the lane closure per Std. Drawing TTC 115-02 closing the outside lane and diverting one lane of traffic to the inside lane as shown on the MOT typical section. While maintaining traffic on the inside lane construct the pavement repair areas as shown on the detail sheet at locations shown in the proposal and/or as directed by the Engineer.

NOTE on pavement repair operations: Once the pavement has been removed, the contractor must work continuously until the pavement has been replaced. The Engineer may restrict the number of locations being repaired at the same time. Pavement repairs must be completed 2 weeks prior to any general milling & filling pavement operations on those specific repair locations.

PHASE I (Milling and Resurfacing & US 62 Overlay)

Install the lane closure and temporary striping per Std. Drawing TTC 115-02 closing the inside lane and diverting one lane of traffic to the outside lane as shown on the MOT typical section. While maintaining traffic on the outside lane, mill the inside lane and paved shoulder to a depth of 1.5 inches. Refill the milled area with the 1.5 inch asphalt surface course. Install permanent striping on the inside edge of pavement While maintaining traffic on the outside lane use barrels to reduce the ramps to one half width and mill one half of the ramp 1 ½ inches and refill with 1 ½" of asphalt. Repeat the procedure on the remaining one half of the ramp. See MOT detail for temporary barrier wall placement for US 62 overlay.

PHASE II (Milling and Resurfacing & US 62 Overlay)

Install the lane closure per Std. Drawing TTC 115-02 closing the outside lane and diverting one lane of traffic to the inside lane as shown on the MOT typical section. While maintaining traffic on the inside lane, construct the guardrail to be installed and mill the outside lane and paved shoulder to a depth of 1.5 inches. Refill the milled area with the 1.5 inch asphalt surface course. Construct the final pavement markings and rumble strips. Mobile operations may be utilized during striping operations. See MOT detail for temporary barrier wall placement for US 62 overlay.

The contractor shall notify the District two weeks in advance before temporary barrier wall placement on the US 62 bridge.

PLANNING LOOPS. Planning loops may be installed prior to the milling operation or after the milling operation at the contractors option. If loops are installed prior to the milling operation the contractor shall be responsible for any damage incurred by the milling construction. Loops shall be installed prior to adding the surface course. Sawing of the surface course will not be allowed.

LANE CLOSURES

Lane closures may be installed for the length of project, however if work is stopped for a period exceeding three days the lane closure will be taken down and reinstalled as work continues. Contrary to section 112, lane closures will **NOT** be measured for payment, but are considered incidental to "Maintain and Control Traffic," lump sum. Lane closures may be left up during both Memorial Day (May 22nd – May 25th) and 4th of July (July 3rd – July 5th) weekends, but the contractor may perform no work during these dates.

Each channelizing drum shall have two rings at its base for additional stabilization.

SIGNS

Additional traffic control signs in addition to normal lane closure signing detailed on the Standard Drawings may be required by the Engineer. Additional signs needed for lane closures may include, but are not limited to, dual mounted TRUCKS USE LEFT/RIGHT LANE, LEFT/RIGHT LANE CLOSED 1 MILE, LEFT/RIGHT LANE CLOSED 2 MILE, LEFT/RIGHT LANE CLOSED 3 MILE, SLOWED/STOPPED TRAFFIC AHEAD. Signage for reduced speed limits and double fine work zones will be furnished, relocated, and maintained by the Contractor.

Contrary to section 112, Individual signs will be measured only once for payment, regardless of how many times they are set, reset, removed, and relocated during the duration of the project. Replacements for damaged signs or signs directed to be replaced by the Engineer due to poor legibility or reflectivity will not be measured for payment.

A quantity of signs has been included for lane shifts, "Roadwork Ahead" signs on entrance ramps, and extra double fine signs and speed limit signs between interchanges to be paid only once no matter how many times they are moved or relocated.

FLASHING ARROWS

Flashing arrows will be paid for once, no matter how many times they are moved or relocated. The Department **WILL NOT** take possession of the flashing arrows upon completion of the work.

PORTABLE CHANGEABLE MESSAGE SIGNS

Provide portable changeable message signs (PCMS) in advance of and within the project at locations to be determined by the Engineer. If more than one lane closure is in place in the same direction of travel, provide additional PCMS. Place PCMS one mile in advance of the anticipated queue at each lane closure. As the actual queue lengthens and/or shortens relocate or provide additional PCMS so that traffic has warning of slowed or stopped traffic at least one mile but not more than two miles before reaching the end of the actual queue. The locations designated may vary as the work progresses. The messages required to be provided will be designated by the Engineer. The PCMS will be in operation at all times. In the event of damage or mechanical/electrical failure, the contractor will repair or replace the PCMS immediately. PCMS will be paid for once, no matter how many times they are moved or relocated. The Department **WILL** take possession of the signs upon completion of the work.

TRUCK MOUNTED ATTENUATORS

Furnish and install MUTCD approved truck mounted attenuators (TMA) in advance of work areas when workers are present less than 12 feet from traffic. If there is less than 500 feet between work sites, only a single TMA will be required at a location directed by the Engineer. Locate the TMAs at the individual work sites and move them as the work zone moves within the project limits. All details of the TMA installations shall be approved by the Engineer. TMA will not be measured for payment, but are incidental to “Maintain and Control Traffic,” lump sum. The Department **WILL NOT** take possession of the TMAs upon completion of the work.

PAVEMENT MARKINGS

If lane closures are in place during nighttime hours, remove or cover the lenses of raised pavement markers that do not conform to the traffic control scheme in use, or as directed by the Engineer. Replace or uncover lenses before a closed lane is reopened to traffic. No direct payment will be made for removing and replacing or covering and uncovering the lenses, but will be incidental to "Maintain and Control Traffic," lump sum.

Place temporary and permanent striping in accordance with Section 112, except that:

1. Temporary and permanent striping will be 6" in width
2. If the contractor's operations or phasing requires temporary markings which must be subsequently removed from the ultimate pavement, an approved removable lane tape must be used. Edge lines will be required for temporary striping.
3. Existing, temporary, or permanent striping will be in place before a lane is opened to traffic
4. Place permanent striping on bridge decks and pavement within the project limits.
5. Permanent striping will be Durable Waterbourne Markings.

Should the Contractor change the existing striping pattern, the Contractor is to restripe the roadway back to its original configuration after a certain period of time especially if no work is anticipated for

a period of time (i.e. winter shutdown).

PAVEMENT EDGE DROP-OFFS

Pavement edge drop-offs will be protected by a lane or shoulder closure. Lane closures will be protected with plastic drums, vertical panels, or barricades as shown on the Standard Drawings.

Pavement edges that traffic is not expected to cross, except accidentally, shall be treated as follows:

Less than 2" – Protect with a lane closure.

2" to 4" – Protect with a lane closure. Place plastic drums, vertical panels, or barricades every 50 feet. Cones may not be used in place of plastic drums, panels, and barricades at any time. Construct a wedge with compacted cuttings from milling, trenching, or asphalt mixtures with a 3:1 or flatter slope, when work is not active in the drop-off area. Place Type III Barricades at the beginning of the lane closures, and place additional Type III Barricades spaced at 2,500 feet during the time the lane closure is in place.

Greater than 4" – Pavement Repair areas – In areas where pavement is to be removed, work should proceed continuously so that traffic is exposed to a drop-off for the minimum amount of time necessary to bring the pavement back up to existing grade. Barrel spacing should be 20 feet and appropriate lighting should be utilized to illuminate the area during nighttime operations.

TRAFFIC COORDINATOR

Designate an employee to be traffic coordinator. The designated Traffic Coordinator must be certified by the American Traffic Safety Services Association (ATSSA). The Traffic Coordinator will inspect the project maintenance of traffic once every two hours during the Contractor's operations and at any time a lane closure is in place. If there is a lane closure in place these inspections will occur every two hours 24 hours per day, 7 days per week. The Traffic Coordinator will report all incidents throughout the work zone to the Engineer on the project. The Contractor will furnish the name and telephone number where the Traffic Coordinator can be contacted at all times.

During any period when a lane closure is in place, the Traffic Coordinator will arrange for personnel to be present on the project at all times to inspect the traffic control, maintain the signing and devices, and relocate portable changeable message boards as queue lengths change. The personnel will have access on the project to a radio or telephone to be used in case of emergencies or accidents.

COORDINATION OF WORK

The Contractor is advised that other projects may be in progress within or in the near vicinity of this project. The traffic control of those projects may affect this project and the traffic control of this project may affect those projects. The Contractor will coordinate the work on this project with the work of the other contractors. In case of conflict, the Engineer will determine the relative priority to give to work phasing on the various projects.

CONTRACTOR'S AND CONTRACTOR'S EMPLOYEES' VEHICLES

Do not use or allow employees to use median crossovers at any time except when inside lanes are closed for construction. In all other phases of construction, change vehicular direction of travel only at interchanges.

COUNTY OF	ITEM NO.	SHEET NO.
MUHLENBERG	2-2077	

MOT TYPICAL SECTIONS
WESTERN KENTUCKY PARKWAY

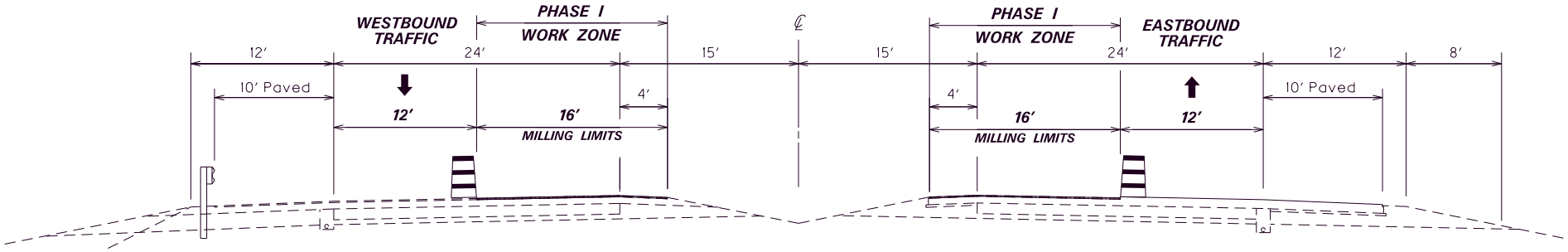

SEQUENCE OF CONSTRUCTION

SEE M.O.T. NOTES

PHASE I

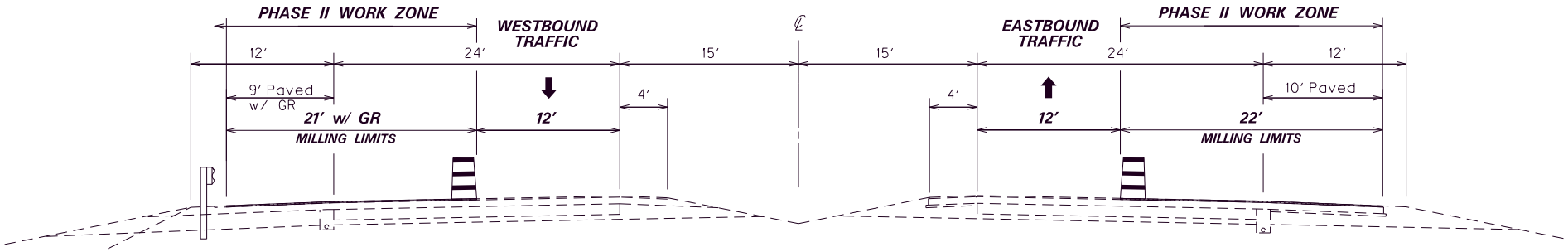

PHASE II

BARRELS ARE TO BE SHIFTED AND LANE SHIFTED TO INSIDE SHOULDER IN MILLING AND REPAVING AREAS, SHIFT BARRELS BACK TO ORIGINAL LOCATION AS THE MILLING AND REPAVING OPERATION ADVANCES.

NOT TO SCALE

MOT TRAFFIC PHASING FOR MILLING & OVERLAY

COUNTY OF	ITEM NO.	SHEET NO.
MUHLENBERG	2-2077	

MOT Phasing at US 62 Bridge

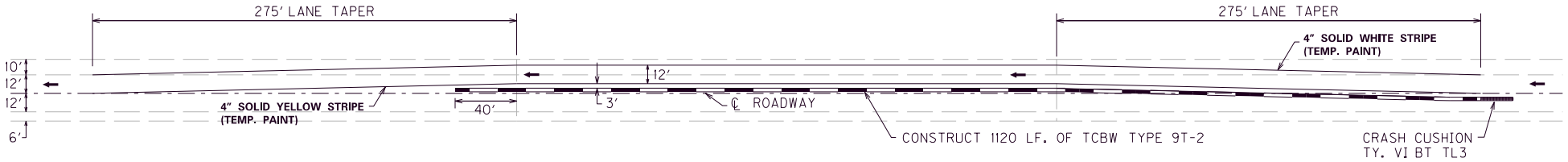

PHASE I
(WESTBOUND SHOWN)

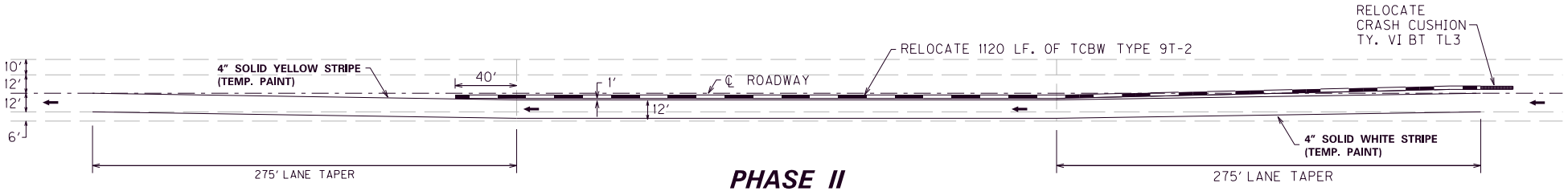

PHASE II
(WESTBOUND SHOWN)

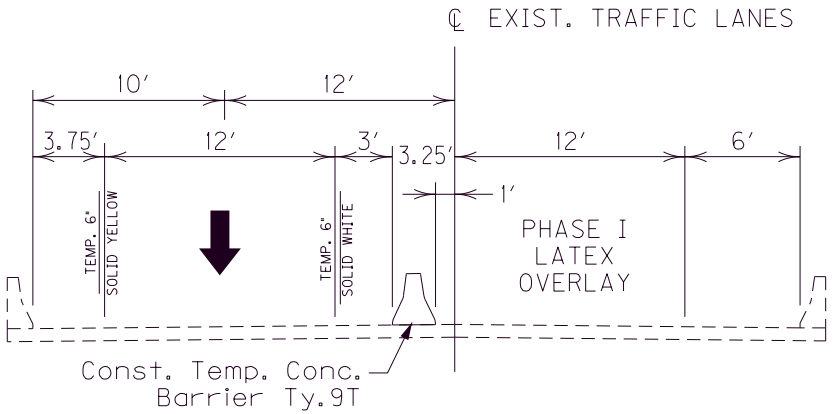

PHASE I
(WESTBOUND SHOWN)

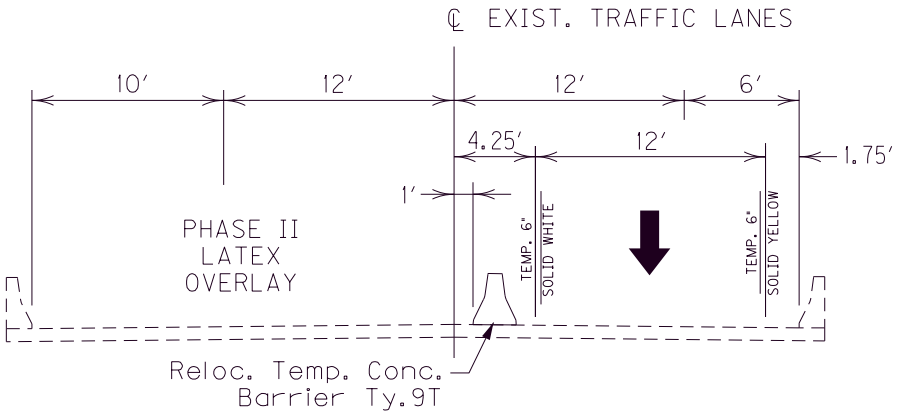

PHASE II
(WESTBOUND SHOWN)

NOT TO SCALE

US 62 TWIN BRIDGES LATEX OVERLAY & TCBW LOCATION

ESTIMATE OF QUANTITIES

BID ITEM CODE	24094EC	08526	08534	08549	08151	08551	08504	03299	08470	
BID ITEM	Partial Depth Patching	Conc. Class "M" Full Depth Patch	Concrete Overlay-Latex	Blast Cleaning	Steel Reinforcement, Epoxy Coated	Machine Preparation of Slab	Epoxy Sand Slurry	Armored Edge	Expansion dam 2.0" Neoprene	
BRIDGE	C.Y.	C.Y.	C.Y.	S.Y.	LBS.	S.Y.	S.Y.	L.F.	L.F.	
WESTERN KY PARKWAY O/US 62	19	8	89	2267	542	2160	243	175	175	

NOTE : QUANTITIES CARRIED OVER TO THE GENERAL SUMMARY

SPECIAL NOTES:

BRIDGE RESTORATION AND WATERPROOFING WITH CONCRETE OVERLAYS

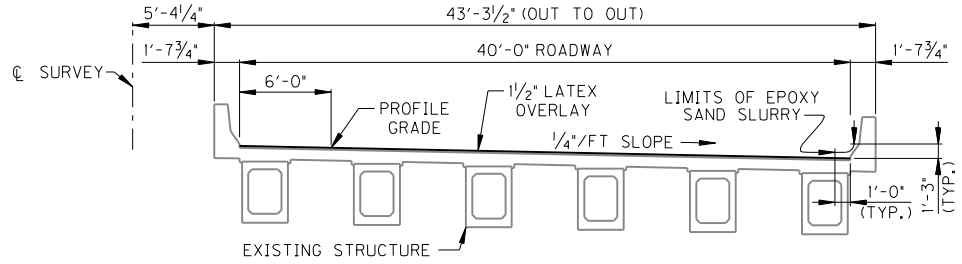

TYPICAL SECTION

(LOOKING AHEAD)
(EASTBOUND STR. SHOWN, WESTBOUND STR. SYMM. ABOUT ℄ SURVEY)

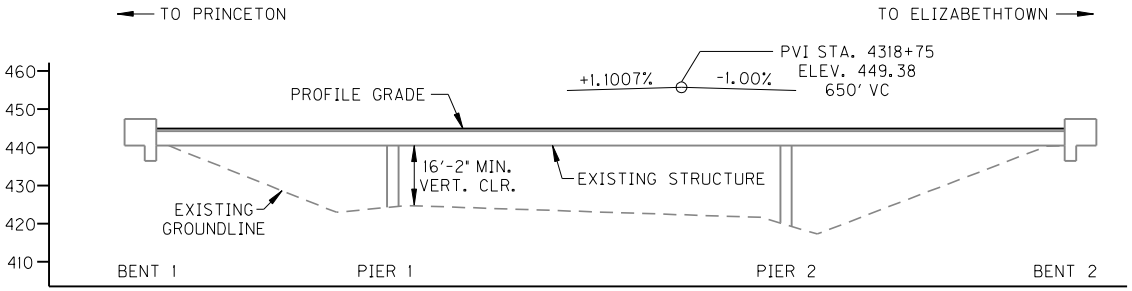

EXISTING ELEVATION

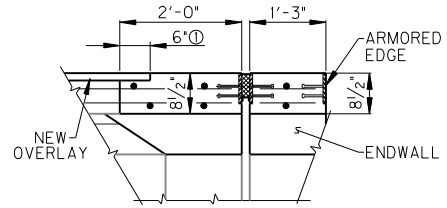

~2" EXPANSION DAM & ARMORED EDGE ABUTMENT #1 & #2~

DETAIL AT EXPANSION JOINTS

SEE STD. DWG. BJE-001-12 FOR ARMORED EDGE AND 2" EXP. JT.

① MILL NEW "AA" CONCRETE AND LAP OVERLAY 6"

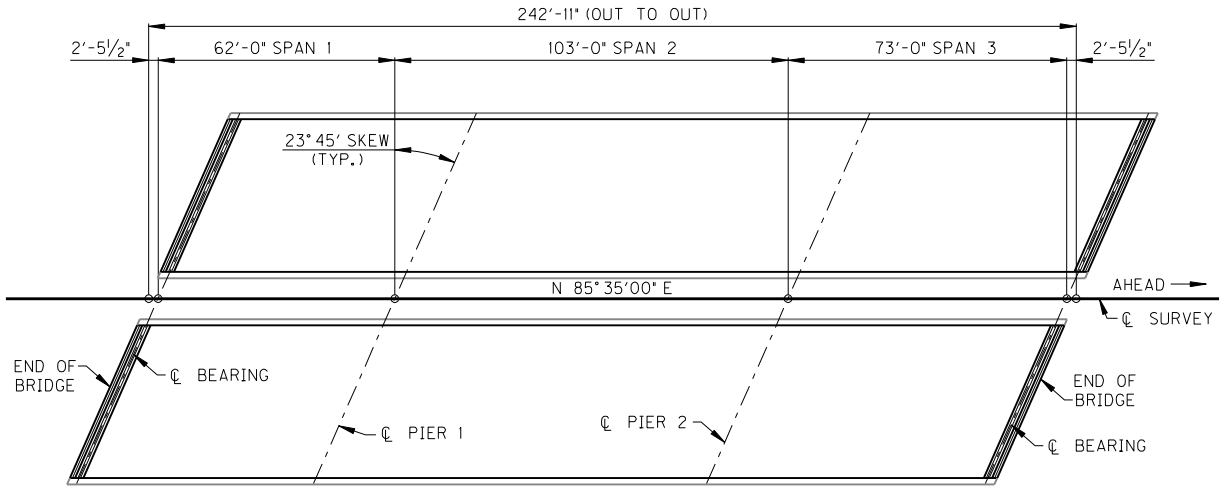

PLAN

REVISION	DATE

DATE: NOVEMBER, 2014	CHECKED BY
DESIGNED BY: DCK	BGS
DETAILED BY: BRM	BGS

Commonwealth of Kentucky
DEPARTMENT OF HIGHWAYS

COUNTY
MUHLENBERG

ROUTE **WKPKW** | CROSSING **US 62**

MP 56.007

ITEM NUMBER

PREPARED BY
HMB PROFESSIONAL ENGINEERS, INC.

SHEET NO.

DRAWING NO.

SPECIAL NOTE FOR BRIDGE RESTORATION AND WATERPROOFING WITH CONCRETE OVERLAYS

I. DESCRIPTION. Perform all work in accordance with the Kentucky Transportation Cabinet, Department of Highway's 2012 Standard Specifications for Road and Bridge Construction and applicable Supplemental Specifications, the Standard Drawings, this Note, and the attached detail drawings. Section references are to the Standard Specifications.

This work consists of the following: (1) Furnish all labor, materials, tools, and equipment; (2) Remove the existing overlay or machine prep the existing slab; (3) Complete full-depth and partial depth repairs as directed by the Engineer; (4) Repair/replace damaged and corroded reinforcing bars; (5) Place new concrete overlay and epoxy-sand slurry in accordance with Section 606; (6) Complete asphalt approach pavement; (7) Maintain and control traffic; and (8) Any other work specified as part of this contract.

All construction will be in accordance with Section 606 unless otherwise specified.

II. MATERIALS.

A. Latex Concrete. See Section 606.03.17.

B. Class "M" Concrete. Use either "M1" or "M2". See Section 601.

C. Bituminous Asphalt. Use CL4 ASPH SURF 0.50A PG76-22

D. Epoxy-Sand Slurry. See Section 606.03.10.

III. CONSTRUCTION.

A. Remove Existing Overlay. In addition to Section 606.03.03, totally remove the existing concrete overlay by milling. Machine preparation of the existing slab to a depth of at least 1/4" below the existing surface is NOT required. When removal of an existing overlay is a pay item, no payment will be allowed for "Machine Preparation of Existing Slab". This work is incidental to the pay item "Removal of Existing Overlay
-Square Yard". See Special Note for Use of Hydrodemolition Method.

B. Partial Depth Slab Repair. Remove areas determined to be unsound by the Engineer via Hydrodemolition or via hand held jackhammers weighing less than 40 lbs. No wrecking balls, drop hammers, or rig-mounted breakers are allowed. Repair/Replace all damaged or severely corroded reinforcing bars prior to partial depth repair operation. The Department will not measure material removal and will consider this work incidental to the bid item "PARTIAL DEPTH PATCHING".

C. Surface Texturing. Texture the concrete surface of the overlay in accordance with Section 609.03.10.

IV. MEASUREMENT. See Section 606 and the following:

A. Latex Modified Concrete (1 1/2 inches thick). The Department will measure the quantity in cubic yards.

B. Latex Modified Concrete for Partial Depth Patching. The Department will measure the quantity in cubic yards by deducting the theoretical volume of bridge deck overlay (LMC) from the total volume (as indicated by the batch quantity tickets) of Concrete required to obtain the finished grade shown on the Plans or established by the Engineer.

C. Remove Existing Overlay. The Department will measure the removal of the existing overlay in square yards, which shall include all labor, equipment, and material needed to complete this work.

D. Steel Reinforcement. The Department will measure any reinforcing steel necessary for the partial or full depth patch in pounds, which shall include all labor, equipment, and material needed to complete this work.

V. PAYMENT. See Section 606 and the following:

A. Latex Modified Concrete (1 1/2 inches thick). The Department will make payment for the Latex Modified Concrete under bid item #08534 "CONCRETE OVERLAY – LATEX" for the quantity in cubic yards complete in place.

B. Latex Modified Concrete for Partial Depth Patching. The Department will make payment for the Partial Depth Patching under bid item #24094EC "PARTIAL DEPTH PATCHING". Payment will be for the quantity per cubic yard complete in place.

C. Remove Existing Overlay. The Department will make payment for the removal of the existing overlay under bid item #08510 "REM EPOXY BIT FOREIGN OVERLAY". Payment will be for the square yard complete.

D. Steel Reinforcement. The Department will make payment for additional steel reinforcement, if necessary, under bid item #08150 "STEEL REINFORCEMENT". Payment will be at the unit price per pound.

SPECIAL NOTE FOR REPLACING EXPANSION DAMS AND/OR INSTALLING ARMORED EDGES FOR CONCRETE ON BRIDGES

I. DESCRIPTION. Perform all work in accordance with the Kentucky Transportation Cabinet, Department of Highway's 2000 Standard Specifications for Road and Bridge Construction and applicable Supplemental Specifications, the Standard Drawings, this Note, and the attached detail drawings. Section references are to the Standard Specifications.

This work consists of the following: (1) Furnish all labor, materials, tools, and equipment; (2) Remove existing concrete and expansion device(s) and/or bridge ends; (3) Install armored edges and new concrete as specified and in accordance with the attached detail drawings; (4) Install new joint seals (where required); (5) Maintain and control traffic; and (6) Any other work specified as part of this contract.

II. MATERIALS.

A. Class "M" Concrete. Use either "M1" or "M2". See Section 601.

B. Structural Steel. Use new, commercial grade steel suitable for welding. The Engineer will base acceptance on visual inspection. See Standard Drawing BJE-001, current edition.

C. Stud Anchors. The armored edge stud anchors are %" x 6" embedded stud shear connectors conforming to ASTM A108, Grade 1015 (Nelson Studs or equal).

D. Steel Reinforcement. Use Grade 60. See Section 602.

E. Epoxy Bond Coat. See Section 511.

F. Neoprene Joint Sealers (Compression Seals). See Section 807.02.02.

G. Neoprene Strip Seals. See attached detail drawings.

III. CONSTRUCTION.

A. Remove Existing Materials. Remove the existing expansion dam/bridge end and specified areas of concrete as shown on the attached sketches. Remove debris and/or expansion joint filler as directed by the Engineer. Dispose of all removed material entirely away from the job site. This work is incidental to the contract unit price for "Expansion Joint Replacement" or "Armored Edge for Concrete".

Clean and leave all existing steel reinforcement encountered in place.

B. Place New Concrete and Armored Edges. After all specified existing materials have been removed; place new armored edges to match the grade of the proposed overlay or to match the original grade (See attached detail drawings). Place the new Class "M" concrete to the scarified grade and finish to receive the new overlay or place the new Class "M" concrete to the original grade and finish with broom strokes drawn transversely from curb to curb.

All new structural steel shall be cleaned and painted with two coats of commercial primer paint red orange in color, except that surfaces to come in contact with concrete are not to be painted.

Blast clean all areas of existing concrete and structural steel to come in contact with new concrete until free of all laitance and deleterious substances immediately prior to the placement of the Class "M" Concrete. The surface areas of existing concrete to come in contact with the new Class "M" Concrete are to be coated with an

epoxy bond coat immediately prior to placing new concrete in accordance with Section 511. The interfaces of the new and old concrete shall be as nearly vertical and horizontal as possible.

C. Additional Steel Reinforcement. Furnish for replacement, as directed by the Engineer, 1200 linear feet of steel reinforcing bars 1/2" diameter by 20' lengths. Place these bars in areas deemed by the Engineer to require additional reinforcement. Field cutting and bending is permitted. Do not place any additional steel reinforcement above the height of the top row of Nelson Studs on the armored edges. Ensure that all exposed steel reinforcement is tied in accordance with Section 602.03.04 prior to pouring the new Class "M" concrete. Deliver unused bars to the Local County Maintenance Bam. Payment will be made in accordance with Section 602.

D. Stage Construction. Installation of concrete and armored edges in two (or more if specified) stages is necessary. Join the armored edges at or near the centerline of the roadway or lane line, field weld and grind smooth.

E. Preformed Neoprene Joint Seal. Place the preformed compression joint seal in one continuous, unbroken length. Place neoprene compression seals as recommended by the manufacturer and in accordance with Section 609.03.04 (D). Place neoprene strip seals as recommended by the manufacturer and in accordance with Section 609.03.04 (E), except that shop drawings will not be required.

F. Shop Plans. Shop plans will not be required. The Contractor is responsible for obtaining field measurements and supplying properly sized materials to complete the work.

IV. MEASUREMENT.

A. Expansion Joint Replacement- X". The Department will measure the quantity in linear feet from gutterline to gutterline along the centerline of the joint.

B. Armored Edge for Concrete. The Department will measure the quantity in linear feet from gutterline to gutterline along the face of the bridge end.

C. Steel Reinforcement. See Section 602.

V. PAYMENT.

A. Expansion Joint Replacement- X". Payment at the contract unit price per linear foot is full compensation for removing specified existing materials, furnishing and installing the new armored edges, concrete, neoprene joint seal, and all incidental items necessary to complete the work (except the overlay material) within the specified pay limits as specified by this note and as shown on the attached detail drawings.

B. Armored Edge for Concrete. Payment at the contract unit price per linear foot is full compensation for removing specified existing materials, furnishing and installing the new armored edges, concrete and all incidental items necessary to complete the work (except the overlay material) within the specified pay limits as specified by this note and as shown on the attached detail drawings.

C. Steel Reinforcement. See Section 602.

The Department will consider payment as full compensation for all work required by this note and the attached detail drawings.

COUNTY OF	ITEM NO.	SHEET NO.
MUHLENBERG	2-2077	

TYPICAL SECTIONS
MAINLINE

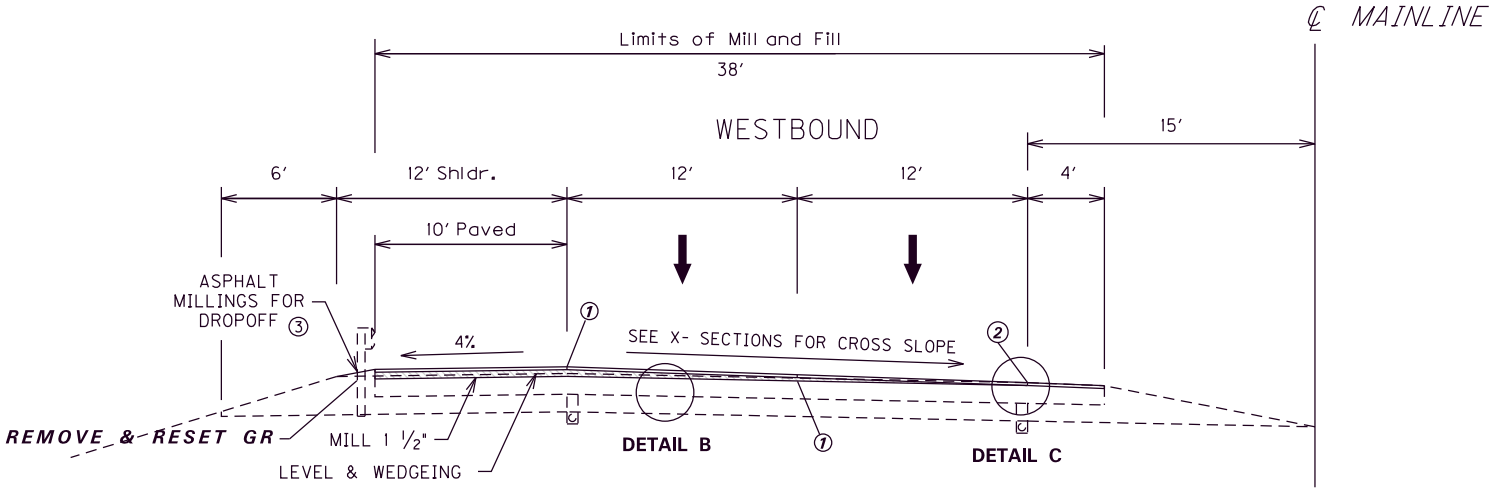

① JOINT ADHESIVE

② ELEVATION OF INSIDE EP SHALL BE HELD AND CONTROL THE CROSS SLOPE CORRECTION

SUPERELEVATED SECTION

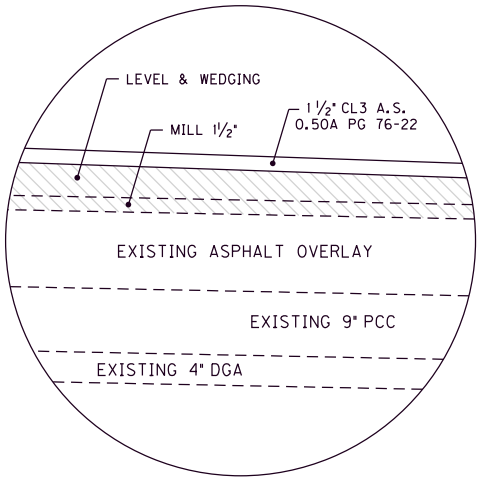

DETAIL 'B'

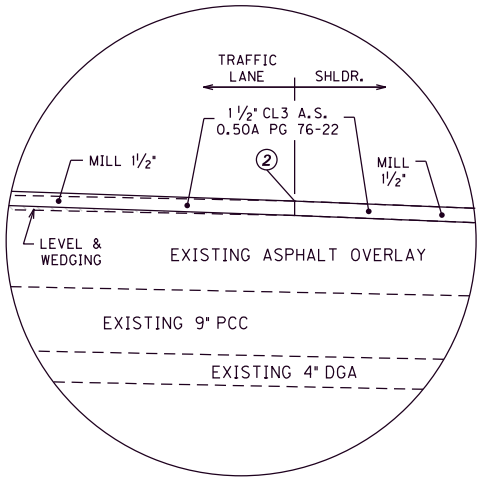

DETAIL 'C'

SURFACING SCHEDULE

MAINLINE TRAFFIC LANES & INSIDE SHOULDERS

ASPHALT PAVE MILLING & TEXTURING ..... 1 ½" DEPTH
LEVELING & WEDGING PG76-22 ..... VAR. DEPTH
CLASS 3 ASPH. SURF. 0.50A PG76-22 ..... 1 ½" DEPTH

OUTSIDE SHOULDERS

ASPHALT PAVE MILLING & TEXTURING ..... 1 ½" DEPTH
CLASS 2 ASPH. SURF. 0.50D PG64-22 ..... 1 ½" DEPTH
ASPHALT MILLING FOR DROPOFF ..... 3" DEPTH

③ ASPHALT SEAL FROM OUTSIDE EDGE OF PAVED SHOULDER TO A POINT 2 FOOT DOWN THE DITCH OR FILL SLOPE FOR PAVEMENT DROP-OFF AREAS REQUIRING DGA.

TWO APPLICATIONS OF THE FOLLOWING :
ASPHALT SEAL COAT..... 2.4 lbs. / S.Y.
ASPHALT SEAL AGGREGATE ..... 20 lbs. / S.Y.

NOT TO SCALE

TYPICAL SECTION
CROSS SLOPE CORRECTION

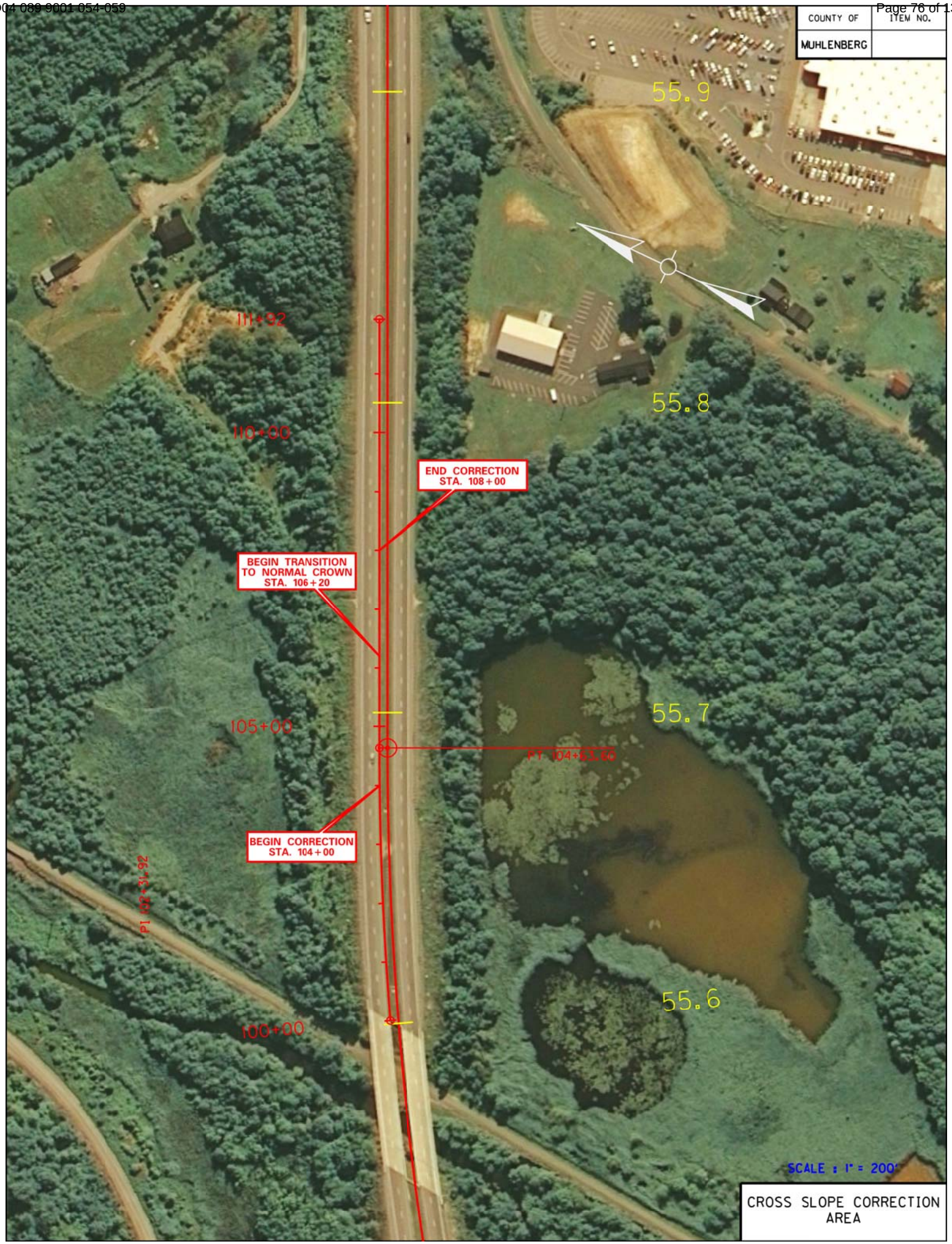
COUNTY OF
MUHLENBERG
ITEM NO.
55.9
55.8
55.7
55.6
111+92
110+00
105+00
100+00
END CORRECTION
STA. 108+00
BEGIN TRANSITION
TO NORMAL CROWN
STA. 106+20
BEGIN CORRECTION
STA. 104+00
PT 104+63.60
PI 102+31.92
SCALE : 1" = 200'
CROSS SLOPE CORRECTION
AREA

COUNTY OF	ITEM NO.	SHEET NO.
MUHLENBERG	2-2077.00	

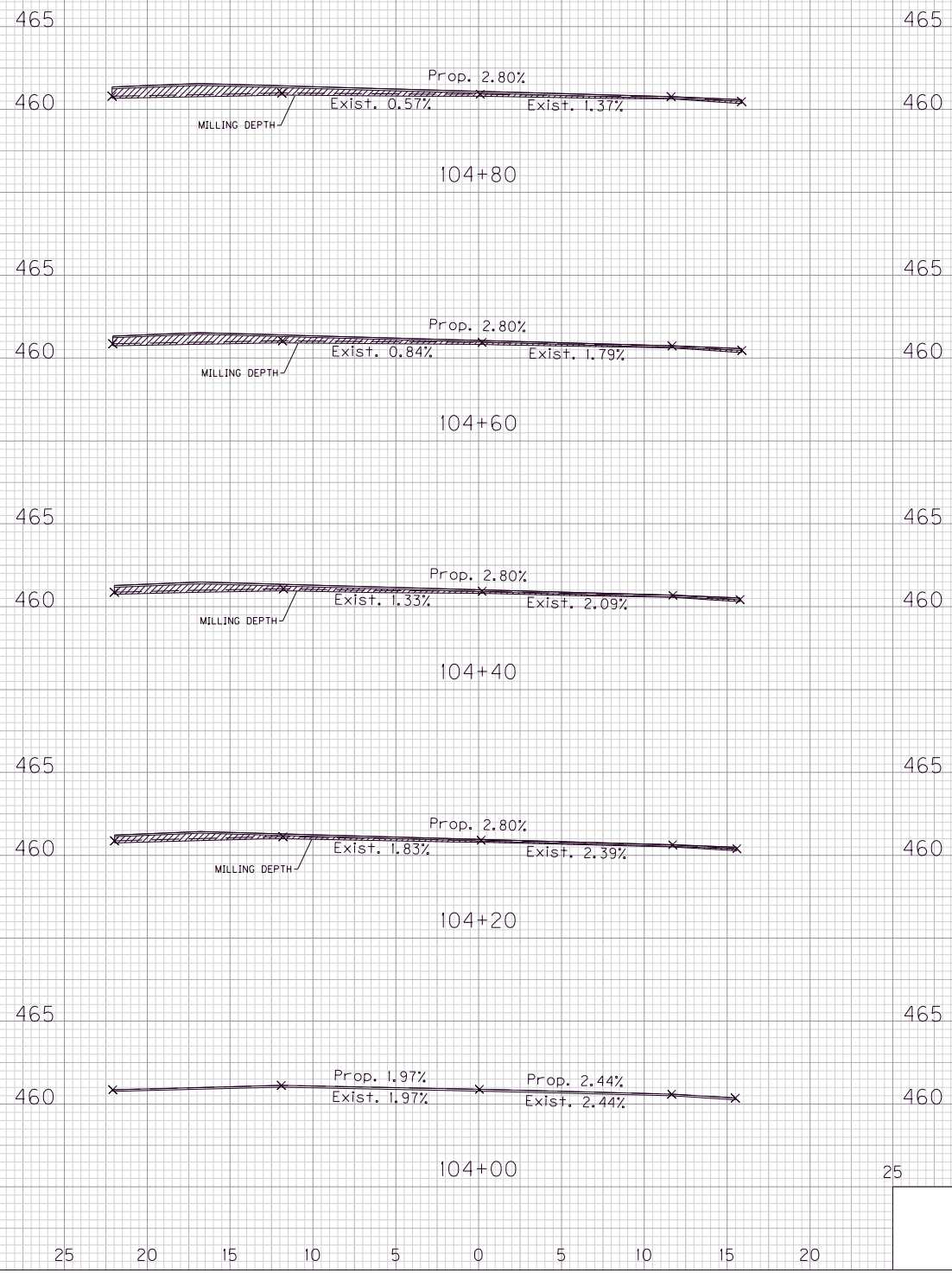

LEVELING & WEDGING

SCALE: 1" = 10' HORIZONTAL
1" = 10' VERTICAL

WESTERN KY PARKWAY
CROSS SLOPE CORRECTION
STA.104+00 TO STA.104+80

FILE NAME: G:\ENGR\HD1198.15\CAD\XSEC.DGN
USER: sdcurry
DATE PLOTTED: November 6, 2014
E-SHEET NAME:
Microstation v8.11.7.180

MicroStation v8.11.7.180	E-SHEET NAME:	USER: sdcurry DATE PLOTTED: November 6, 2014	FILE NAME: G:\ENGR\HDI198.15\CAD\XSEC.DGN

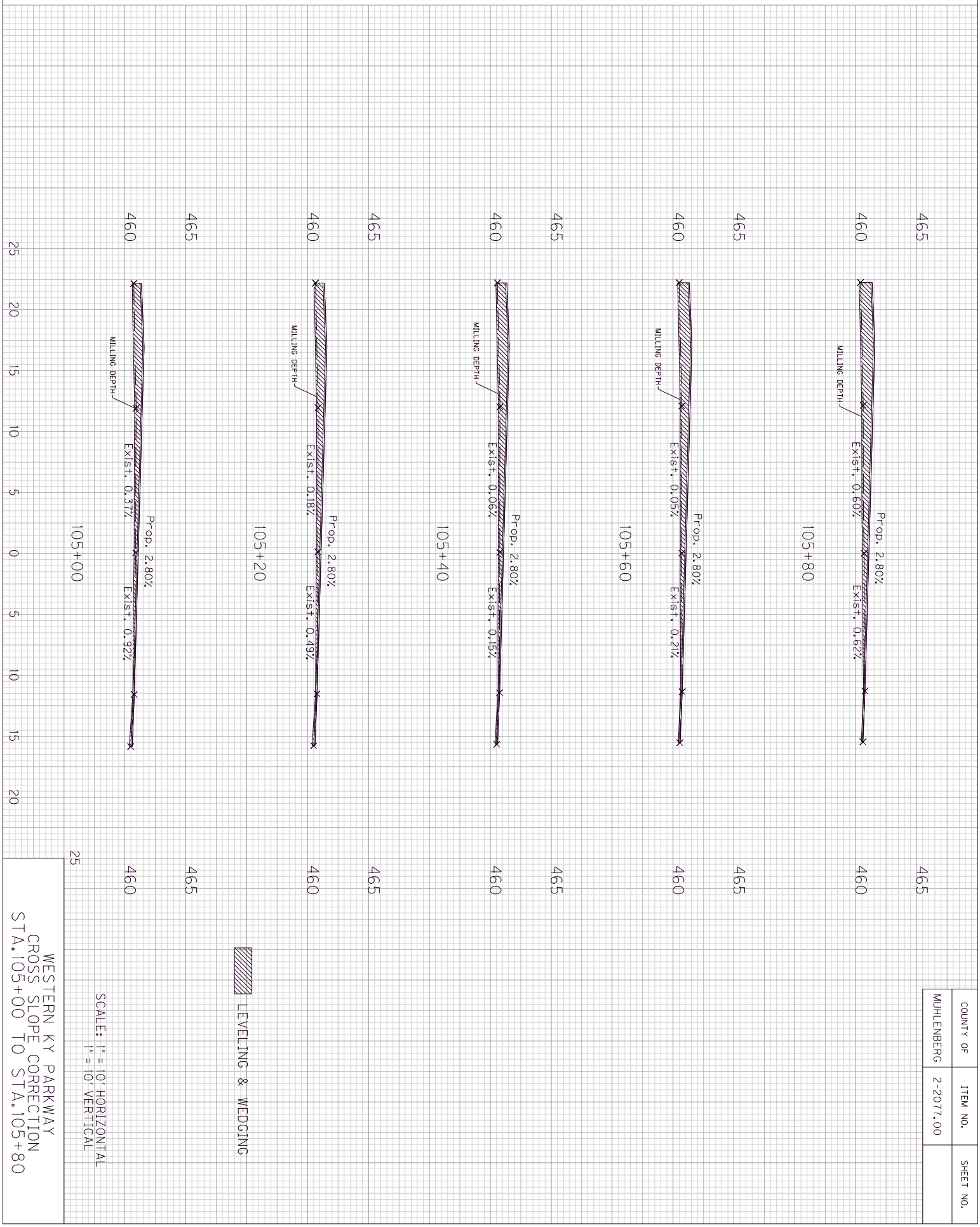

COUNTY OF	ITEM NO.	SHEET NO.
MUHLENBERG	2-2077.00	

COUNTY OF	ITEM NO.	SHEET NO.
MUHLENBERG	2-2077.00	

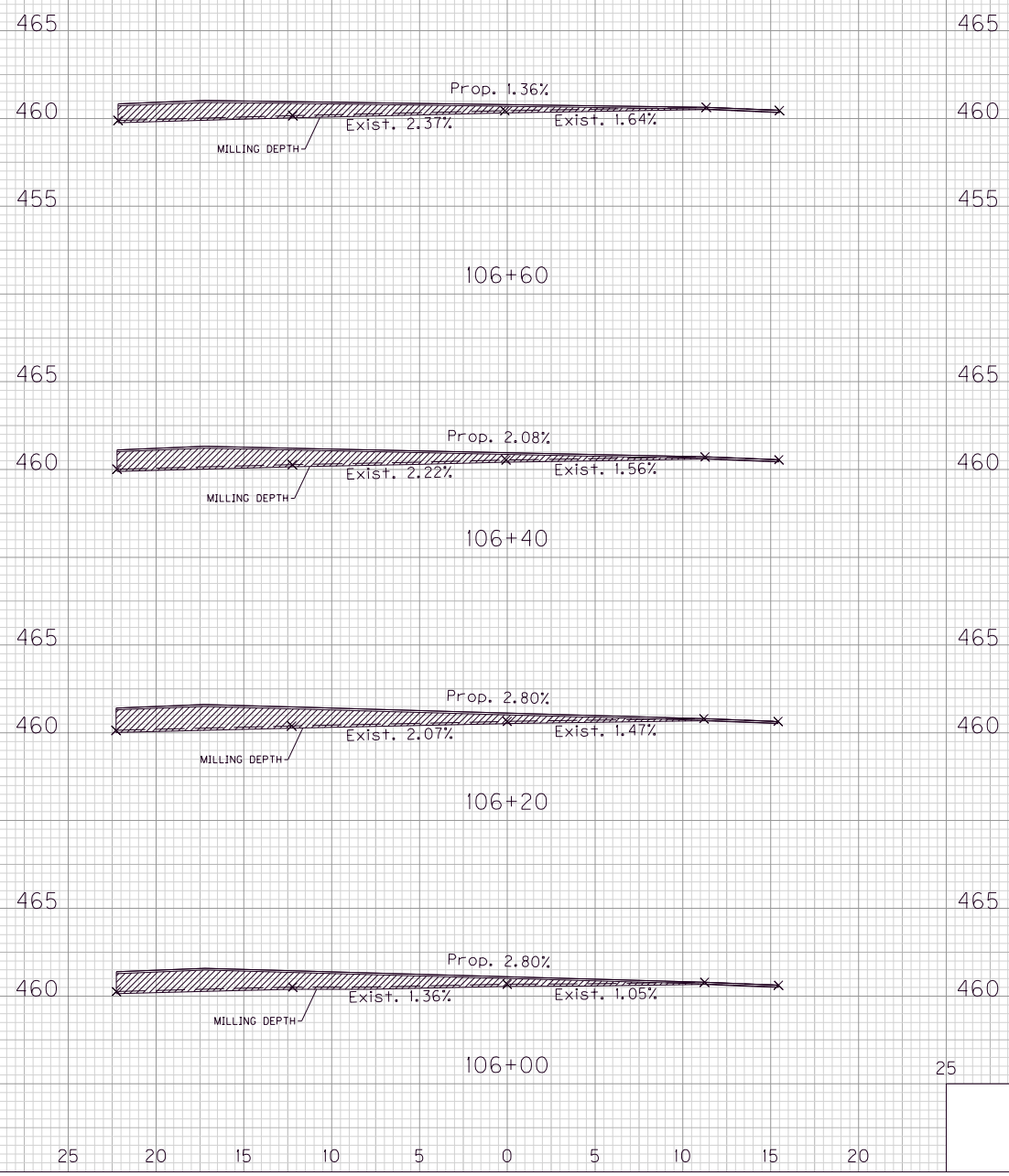

LEVELING & WEDGING

SCALE: 1" = 10' HORIZONTAL
1" = 10' VERTICAL

WESTERN KY PARKWAY
CROSS SLOPE CORRECTION
STA.106+00 TO STA.106+60

FILE NAME: G:\ENGR\HD1198.15\CAD\XSEC.DGN
USER: sdcurry
DATE PLOTTED: November 6, 2014
E-SHEET NAME:
Microstation v8.11.7.180

COUNTY OF	ITEM NO.	SHEET NO.
MUHLENBERG	2-2077.00	

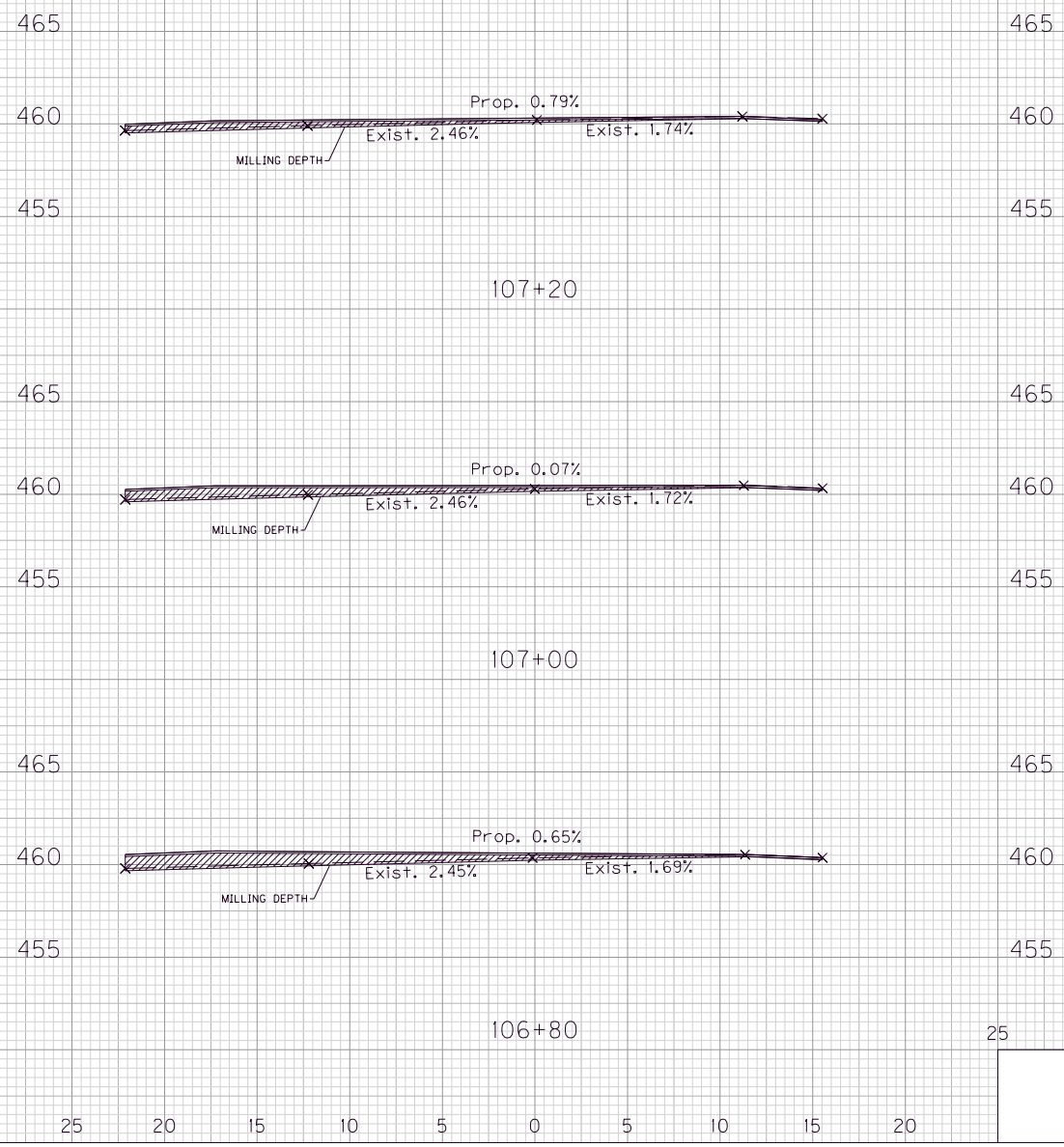

LEVELING & WEDGING

SCALE: 1" = 10' HORIZONTAL
1" = 10' VERTICAL

WESTERN KY PARKWAY
CROSS SLOPE CORRECTION
STA.106+80 TO STA.107+20

FILE NAME: G:\ENGR\HD1198.15\CAD\XSEC.DGN
USER: sdcurry
DATE PLOTTED: November 6, 2014
E-SHEET NAME:
Microstation v8.11.7.180

MicroStation v8.11.7.180	E-SHEET NAME:	USER: sdcurry DATE PLOTTED: November 6, 2014	FILE NAME: G:\ENGR\HDI198.15\CAD\XSEC.DGN

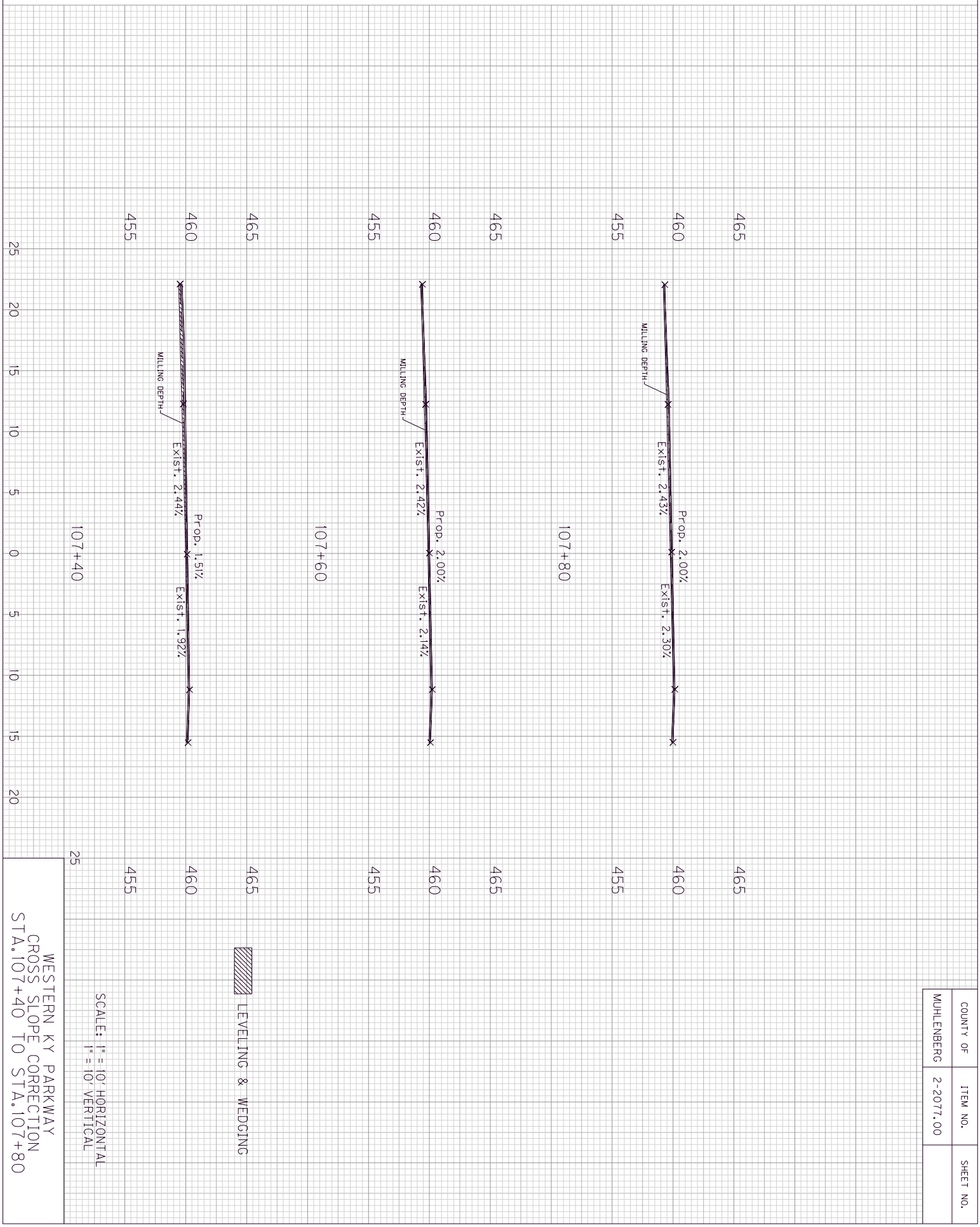

COUNTY OF	ITEM NO.	SHEET NO.
MUHLENBERG	2-2077.00	

COUNTY OF	ITEM NO.	SHEET NO.
MUHLENBERG	2-2077.00	

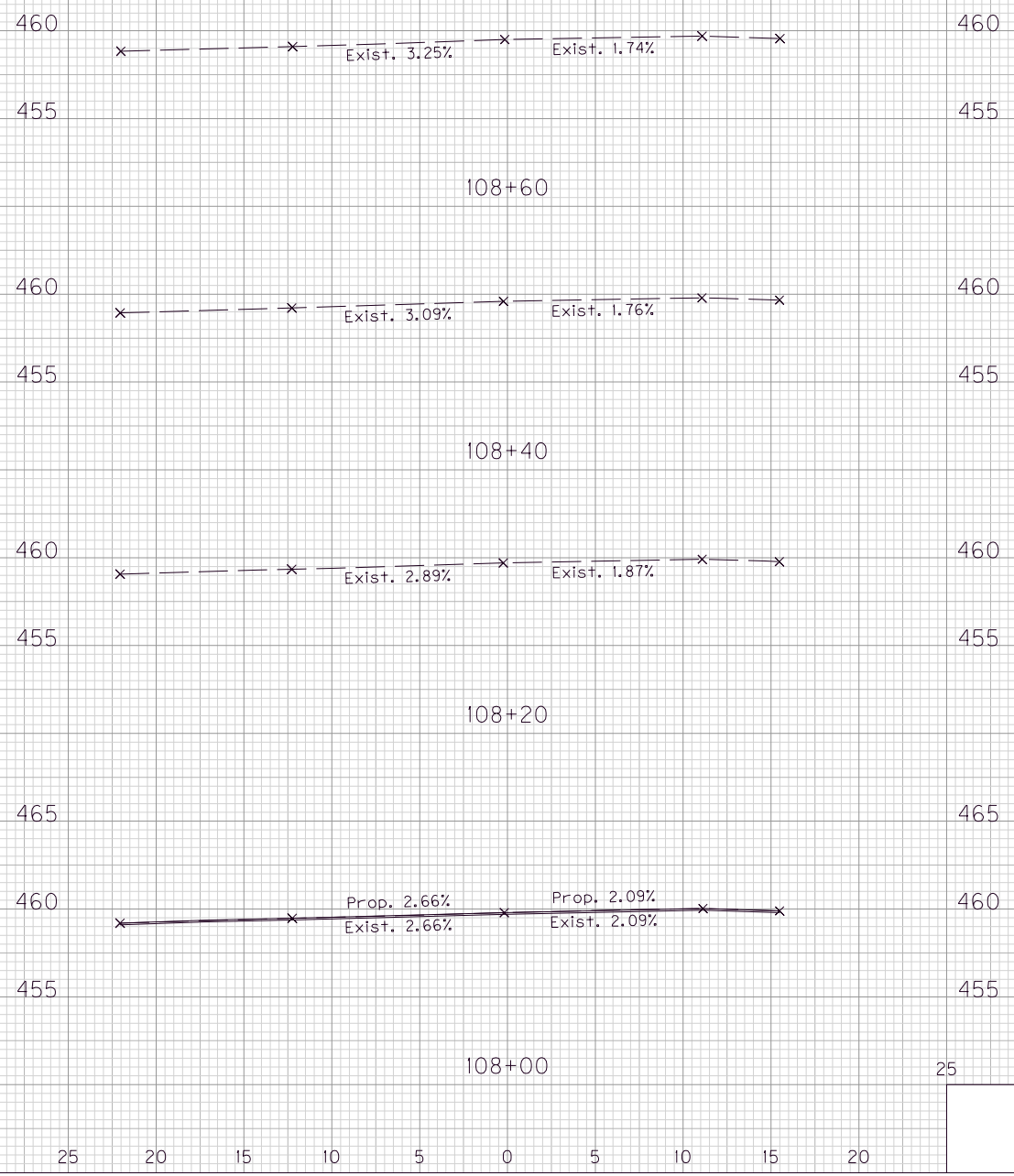

LEVELING & WEDGING

SCALE: 1" = 10' HORIZONTAL
1" = 10' VERTICAL

WESTERN KY PARKWAY
CROSS SLOPE CORRECTION
STA.108+00 TO STA.108+60

FILE NAME: G:\ENGR\HD1198.15\CAD\XSEC.DGN
USER: sdcurry
DATE PLOTTED: November 6, 2014
E-SHEET NAME:
MicroStation v8.11.7.180

Wendell Ford-Western Kentucky Parkway

Rehabilitation
Muhlenberg County Item # 2-2077.0
Mile Point 54.28 to mile point 59.92

PUBLIC INFORMATION PLAN

The primary goal of this Public Information Plan (PIP) is to inform the motoring public and area stakeholders of project information including Maintenance of Traffic (MOT) which includes lane restrictions, reducing lane width, and\or ramp closures that may be required. The contractor is required to work with the KYTC District 2 Public Information Officer (PIO) to coordinate and disseminate appropriate information regarding construction plans to stakeholders, the public, and news media in a timely manner.

STAKEHOLDERS

- Legislators
  - State Representative Brent Yonts
  - State Senator Jerry Rhoads
  - State Representative Suzanne Miles
  - State Representative Tommy Thompson
  - State Representative Ben Wade

- State & Federal Agencies
  - KSP Madisonville Post 2- Trooper Stu Recke
  - KVE Henderson- Lt. Kevin Rogers
  - KY Tourism Gil Lawson- Frankfort
  - KY Area 2 Emergency Management-Patrick Hardesty
  - State Emergency Management-Buddy Rogers
  - Kentucky Transportation Operations Center (511.ky.gov) 502-564-2080
  - KY Over Dimensional Permits-Travis Cheatham travis.cheatham@ky.gov

- Muhlenberg County Agencies & Officials
  - Muhlenberg Co. CJE- Rick Newman
  - Greenville Mayor Ed DeArmond
  - Muhlenberg County Sheriff Charles E. Perry
  - Muhlenberg County 911 Call Center
  - Central City Fire Department- Chief Ricky King
  - Central City Police Department- Chief Kenneth Curtis
  - Muhlenberg County Schools Transportation- Denna Noffsinger

- Utility Companies
  - Kentucky Utilities
  - Kenergy RECC- Renee Beasley Jones
  - Pennyrile RECC

TRUCKING FIRMS AND OUT OF STATE STAKEHOLDERS

- Trucking Trade Publication Web sites
  - E-Trucker Magazine Max Heine MHeine@rrpub.com
  - The Trucker Magazine Lyndon Finney editor@thetrucker.com
  - Truck Landline Magazine Clarissa Kell-Holland clarissa_kell-holland@landlinemag.com\

- Area Trucking Companies/Shippers
  - Owensboro Riverport- information@owensbororiverport.com
  - UPS- Louisville-Bill Sprigg bsprigg@ups.com
  - Federal Express-Heather Montgomery hmontgomery@fedex.com
  - Kentucky Department of Vehicle Regulation Rick Taylor rick.taylor@ky.gov)
  - Cal-Maine Foods- Charles Gossett
  - Ray Jones Trucking Company- Teresa Jones
  - TVA Paradise Power Plant- Jason Rice
  - Logan Aluminum- Mo Oelker
  - Information posted on the 511 website (www.511.ky.gov) and on the 511 telephone information system.

PRESENTATIONS

A project description including anticipated schedule will be provided to the media, stakeholders and other emergency service agencies via e-mail prior to the start of work. Information will be provided to these groups via traffic advisories, and/or press releases approximately one week prior to the start of work with additional advisories as appropriate for traffic shifts, lane restrictions, closures, etc.

MEDIA RELATIONS

The District 2 Public Information Officer will prepare an initial news release regarding the contract award for the project. The PIO will conduct interviews with the media throughout the project duration to keep the public informed of construction progress. Traffic advisories will be submitted to the media when a change in the MOT occurs. The contractor must provide to the PIO via the Resident Engineer notification of any change in the MOT at least three (3) days prior to the change.

Right-of-Way Certification Form

Revised 2/22/11

☐ Federal Funded ☑ Original

☑ State Funded ☐ Re-Certification

This form must be completed and submitted to FHWA with the PS&E package for federal-aid funded Interstate, Appalachia, and Major projects. This form shall also be submitted to FHWA for all federal-aid projects that fall under Conditions No. 2 or 3 outlined elsewhere in this form. When Condition No. 2 or 3 apply, KYTC shall resubmit this ROW Certification prior to construction contract Award. For all other federal-aid projects, this form shall be completed and retained in the KYTC project file.

Date: June 9, 2014

Project Name: Western KY Pkwy (KY 9001) Letting Date:

Project #: County: Muhlenberg

Item #: 02-2077.00 Federal #:

Description of Project: Pavement preventative maintenance on Western KY Pkwy (KY 9001) from MP 54.285 to MP 59.920.

Projects that require NO new or additional right-of-way acquisitions and/or relocations

☑ The proposed transportation improvement will be built within the existing rights-of -way and there are no properties to be acquired, individuals, families, and businesses ("relocatees") to be relocated, or improvements to be removed as a part of this project.

Projects that require new or additional right-of-way acquisitions and/or relocations

☐ Per 23 CFR 635.309, the KYTC hereby certify that all relocatees have been relocated to decent, safe, and sanitary housing or that KYTC has made available to relocatees adequate replacement housing in accordance with the provisions of the current FHWA directive(s) covering the administration of the Highway Relocation Assistance Program and that at least one of the following three conditions has been met. (Check those that apply.)

☐ **Condition 1.** All necessary rights-of-way, including control of access rights when applicable, have been acquired including legal and physical possession. Trial or appeal of cases may be pending in court but legal possession has been obtained. There may be some improvements remaining on the right-of-way, but all occupants have vacated the lands and improvements, and KYTC has physical possession and the rights to remove, salvage, or demolish all improvements and enter on all land. Fair market value has been paid or deposited with the court.

☐ **Condition 2.** Although all necessary rights-of-way have not been fully acquired, the right to occupy and to use all rights-of-way required for the proper execution of the project has been acquired. Trial or appeal of some parcels may be pending in court and on other parcels full legal possession has not been obtained, but right of entry has been obtained, the occupants of all lands and improvements have vacated, and KYTC has physical possession and right to remove, salvage, or demolish all improvements. Fair market value has been paid or deposited with the court for most parcels. Fair market value for all pending parcels will be paid or deposited with the court prior to AWARD of construction contract. (See note 1 below.)

Note 1: The KYTC shall re-submit a right-of-way certification form for this project prior to AWARD of all Federal-Aid construction contracts. Award must not to be made until after KYTC has obtained full legal possession and fair market value for all parcels has been paid or deposited with the court and FHWA has concurred in the re-submitted right-of-way certification.

Right-of-Way Certification Form

Revised 2/22/11

☐ **Condition 3.** The acquisition or right of occupancy and use of a few remaining parcels are not complete and/or some parcels still have occupants. However, all remaining occupants have had replacement housing made available to them in accordance with 49 CFR 24.204. The KYTC is hereby requesting authorization to advertise this project for bids and to proceed with bid letting even though the necessary rights-of-way will not be fully acquired, and/or some occupants will not be relocated, and/or the fair market value will not be paid or deposited with the court for some parcels until after bid letting. KYTC will fully meet all the requirements outlined in 23 CFR 635.309(c)(3) and 49 CFR 24.102(j) and will expedite completion of all acquisitions, relocations, and full payments after bid letting and prior to AWARD of the construction contract or force account construction. A full explanation and reason for this request, including identification of each such parcel and dates on which acquisitions, payments, and relocations will be completed, is attached to this certification form for FHWA concurrence. (See note 2.)

Note 2: The KYTC may request authorization on this basis only in unique and unusual circumstances. Proceeding to bid letting shall be the exception and never become the rule. In all cases, the KYTC shall make extraordinary efforts to expedite completion of the acquisition, payment for all affected parcels, and the relocation of all relocatees prior to AWARD of all Federal-Aid construction contracts or force account construction.

Approved:	Jennifer K. Cox Printed Name	6/9/14 Signature	Right-of-Way Supervisor
Approved:	DM Loy Printed Name	Signature	Acting 09 Jun 2014 KYTC, Director of ROW &Utilities
Approved:	Printed Name	Signature	FHWA, ROW Officer (when applicable)

Right-of-Way Certification Form

Revised 2/22/11

Date: June 9, 2014

Project Name: Western KY Pkwy (KY 9001)
Project #: _____
Item #: 02-2077.00
Letting Date: _____

County: Muhlenberg
Federal #: _____

This project has 0 total number of parcels to be acquired, and 0 total number of individuals or families to be relocated, as well as 0 total number of businesses to be relocated.

0 Parcels where acquired by a signed fee simple deed and fair market value has been paid

____ Parcels have been acquired by IOJ through condemnation and fair market value has been deposited with the court

____ Parcels have not been acquired at this time (*explain below for each parcel*)

____ Parcels have been acquired or have a "right of entry" but fair market value has not been paid or has not been deposited with the court *(explain below for each parcel)*

____ Relocatees have not been relocated from parcels ____, ____, ____, ____, ____, ____, and ____ *(explain below for each parcel)*

Parcel #	Name/Station	Explanation for delayed acquisition, delayed relocation, or delayed payment of fair market value	Proposed date of payment or of relocation

There are 0 billboards and/or 0 cemeteries involved on this project.

There are 0 water or monitoring wells on parcels ____, ____, ____, ____, and ____. All have been acquired and are the responsibility of the project contractor to close/cap.

Form Effective Date: April 1, 2006
Last Revised: February 22, 2011

UTILITY NOTES TO BE INCLUDED IN THE PROPOSAL
SPECIAL NOTES FOR UTILITY CLEARANCE
IMPACT ON CONSTRUCTION
Muhlenberg County
Item No 2-2077.00
WK Parkway
Mill And Over Lay MP 54.085 to MP 59.920

The following is a list of utility companies involved on this project. Contractor is advised to use caution and call **BUD** prior to beginning work.

No know utilities will be impacted with this project.

PROTECTION OF UTILITIES

The location of utilities provided in the contract documents has been furnished by the facility owners and/or by reviewing record drawings and may not be accurate. It will be the roadway contractor's responsibility to locate utilities before excavating by calling the various utility owners and by examining any supplemental information supplied by the cabinet. If necessary, the roadway contractor shall determine the exact location and elevation of utilities by hand digging to expose utilities before excavating in the area of a utility. The cost of repair and any other associated costs for any damage to utilities caused by the roadway contractor's operations shall be borne by the roadway contractor.

The contractor is advised to contact the **BUD one-call system at 1-800-752-6007** at least two working days prior to excavating. Contractor should be aware that owners of underground facilities are not required to be members of the BUD one-call system. It may be necessary for the contractor to contact the County Court Clerk to determine what utility companies have facilities in the project area.

PART II

SPECIFICATIONS AND STANDARD DRAWINGS

SPECIFICATIONS REFERENCE

Any reference in the plans or proposal to previous editions of the *Standard Specifications for Road and Bridge Construction* and *Standard Drawings* are superseded by *Standard Specifications for Road and Bridge Construction, Edition of 2012* and *Standard Drawings, Edition of 2012 with the 2012 Revision.*

Supplemental Specifications to the
Standard Specifications for Road and Bridge Construction, 2012 Edition
Effective with the August 22, 2014 Letting

Subsection: **Revision:**	102.15 Process Agent. Replace the 1st paragraph with the following: Every corporation doing business with the Department shall submit evidence of compliance with KRS Sections 14A.4-010, 271B.11-010, 271B.11-070, 271B.11-080, 271B.5-010 and 271B.16-220, and file with the Department the name and address of the process agent upon whom process may be served.
Subsection: **Revision:**	105.13 Claims Resolution Process. Delete all references to TC 63-34 and TC 63-44 from the subsection as these forms are no longer available through the forms library and are forms generated within the AASHTO SiteManager software.
Subsection: **Revision:**	108.03 Preconstruction Conference. Replace 8) Staking with the following: 8) Staking (designated by a Professional Engineer or Land Surveyor licensed in the Commonwealth of Kentucky.
Subsection: **Revision:**	109.07.02 Fuel. Revise item Crushed Aggregate Used for Embankment Stabilization to the following: Crushed Aggregate Used for Stabilization of Unsuitable Materials Used for Embankment Stabilization
	Delete the following item from the table. ~~Crushed Sandstone Base (Cement Treated)~~
Subsection: **Revision:**	110.02 Demobilization. Replace the first part of the first sentence of the second paragraph with the following: Perform all work and operations necessary to accomplish final clean-up as specified in the first paragraph of Subsection 105.12;
Subsection: **Revision:**	112.03.12 Project Traffic Coordinator (PTC). Replace the last paragraph of this subsection with the following: Ensure the designated PTC has sufficient skill and experience to properly perform the task assigned and has successfully completed the qualification courses.
Subsection: **Revision:**	112.04.18 Diversions (By-Pass Detours). Insert the following sentence after the 2nd sentence of this subsection. The Department will not measure temporary drainage structures for payment when the contract documents provide the required drainage opening that must be maintained with the diversion. The temporary drainage structures shall be incidental to the construction of the diversion. If the contract documents fail to provide the required drainage opening needed for the diversion, the cost of the temporary drainage structure will be handled as extra work in accordance with section 109.04.
Subsection: **Revision:**	201.03.01 Contractor Staking. Replace the first paragraph with the following: Perform all necessary surveying under the general supervision of a Professional Engineer or Land Surveyor licensed in the Commonwealth of Kentucky.

Supplemental Specifications to the
Standard Specifications for Road and Bridge Construction, 2012 Edition
Effective with the August 22, 2014 Letting

Subsection: **Revision:**	201.04.01 Contractor Staking. Replace the last sentence of the paragraph with the following: Complete the general layout of the project under the supervision of a Professional Engineer or Land Surveyor licensed in the Commonwealth of Kentucky.
Subsection: **Revision:**	206.04.01 Embankment-in-Place. Replace the fourth paragraph with the following: The Department will not measure **suitable** excavation included in the original plans that is disposed of for payment and will consider it incidental to Embankment-in-Place.
Subsection: **Revision:**	208.02.01 Cement. Replace paragraph with the following: Select Type I or Type II cement conforming to Section 801. Use the same type cement throughout the work.
Subsection: **Revision:**	208.03.06 Curing and Protection. Replace the fourth paragraph with the following: Do not allow traffic or equipment on the finished surface until the stabilized subgrade has cured for a total of 7-days with an ambient air temperature above 40 degrees Fahrenheit. A curing day consists of a continuous 24-hour period in which the ambient air temperature does not fall below 40 degrees Fahrenheit. Curing days will not be calculated consecutively, but must total seven (7) , 24-hour days with the ambient air temperature remaining at or above 40 degrees Fahrenheit before traffic or equipment will be allowed to traverse the stabilized subgrade. The Department may allow a shortened curing period when the Contractor requests. The Contractor shall give the Department at least 3 day notice of the request for a shortened curing period. The Department will require a minimum of 3 curing days after final compaction. The Contractor shall furnish cores to the treated depth of the roadbed at 500 feet intervals for each lane when a shortened curing time is requested. The Department will test cores using an unconfined compression test. Roadbed cores must achieve a minimum strength requirement of 80 psi.
Subsection: **Revision:**	208.03.06 Curing and Protection. Replace paragraph eight with the following: At no expense to the Department, repair any damage to the subgrade caused by freezing.
Subsection: **Part:** **Revision:**	212.03.03 Permanent Seeding and Protection. A) Seed Mixtures for Permanent Seeding. Revise **Seed Mix Type I** to the mixture shown below: 50% Kentucky 31 Tall Fescue (Festuca arundinacea) 35% Hard Fescue (Festuca (Festuca longifolia) 10% Ryegrass, Perennial (Lolium perenne) 5% White Dutch Clover (Trifolium repens)
Subsection: **Part:** **Number:** **Revision:**	212.03.03 Permanent Seeding and Protection. A) Seed Mixtures for Permanent Seeding. 2) Replace the paragraph with the following: Permanent Seeding on Slopes Greater than 3:1 in Highway Districts 4, 5, 6, and 7. Apply seed mix Type II at a minimum application rate of 100 pounds per acre. If adjacent to a golf course replace the crown vetch with Kentucky 31 Tall Fescue.

Supplemental Specifications to the
Standard Specifications for Road and Bridge Construction, 2012 Edition
Effective with the August 22, 2014 Letting

Subsection: **Part:** **Number:** **Revision:**	212.03.03 Permanent Seeding and Protection. A) Seed Mixtures for Permanent Seeding. 3) Replace the paragraph with the following: Permanent Seeding on Slopes Greater than 3:1 in Highway Districts 1, 2, 3, 8, 9, 10, 11, and 12. Apply seed mix Type III at a minimum application rate of 100 pounds per acre. If adjacent to crop land or golf course, replace the Sericea Lespedeza with Kentucky 31 Fescue.
Subsection: **Part:** **Revision:**	212.03.03 Permanent Seeding and Protection. B) Procedures for Permanent Seeding. Delete the first sentence of the section.
Subsection: **Part:** **Revision:**	212.03.03 Permanent Seeding and Protection. B) Procedures for Permanent Seeding. Replace the second and third sentence of the section with the following: Prepare a seedbed and apply an initial fertilizer that contains a minimum of 100 pounds of nitrogen, 100 pounds of phosphate, and 100 pounds of potash per acre. Apply agricultural limestone to the seedbed when the Engineer determines it is needed. When required, place agricultural limestone at a rate of 3 tons per acre.
Subsection: **Part:** **Revision:**	212.03.03 Permanent Seeding and Protection. D) Top Dressing. Change the title of part to D) Fertilizer.
Subsection: **Part:** **Revision:**	212.03.03 Permanent Seeding and Protection. D) Fertilizer. Replace the first paragraph with the following: Apply fertilizer at the beginning of the seeding operation and after vegetation is established. Use fertilizer delivered to the project in bags or bulk. Apply initial fertilizer to all areas prior to the seeding or sodding operation at the application rate specified in 212.03.03 B). Apply 20-10-10 fertilizer to the areas after vegetation has been established at a rate of 11.5 pounds per 1,000 square feet. Obtain approval from the Engineer prior to the 2nd fertilizer application. Reapply fertilizer to any area that has a streaked appearance. The reapplication shall be at no additional cost to the Department. Re-establish any vegetation severely damaged or destroyed because of an excessive application of fertilizer at no cost to the Department.
Subsection: **Part:** **Revision:**	212.03.03 Permanent Seeding and Protection. D) Fertilizer. Delete the second paragraph.
Subsection: **Revision:**	212.04.04 Agricultural Limestone. Replace the entire section with the following: The Department will measure the quantity of agricultural limestone in tons.
Subsection: **Revision:**	212.04.05 Fertilizer. Replace the entire section with the following: The Department will measure fertilizer used in the seeding or sodding operations for payment. The Department will measure the quantity by tons.

Supplemental Specifications to the
Standard Specifications for Road and Bridge Construction, 2012 Edition
Effective with the August 22, 2014 Letting

Subsection:	212.05 PAYMENT.
Revision:	Delete the following item code: Code — Pay Item — Pay Unit 05966 — Topdressing Fertilizer — Ton
Subsection:	212.05 PAYMENT.
Revision:	Add the following pay items: Code — Pay Item — Pay Unit 05963 — Initial Fertilizer — Ton 05964 — 20-10-10 Fertilizer — Ton 05992 — Agricultural Limestone — Ton
Subsection:	213.03.02 Progress Requirements.
Revision:	Replace the last sentence of the third paragraph with the following: Additionally, the Department will apply a penalty equal to the liquidated damages when all aspects of the work are not coordinated in an acceptable manner within 7 calendar days after written notification.
Subsection:	213.03.05 Temporary Control Measures.
Part:	E) Temporary Seeding and Protection.
Revision:	Delete the second sentence of the first paragraph.
Subsection:	304.02.01 Physical Properties.
Table:	Required Geogrid Properties
Revision:	Replace all references to Test Method "GRI-GG2-87" with ASTM D 7737.
Subsection:	402.03.02 Contractor Quality Control and Department Acceptance.
Part:	B) Sampling.
Revision:	Replace the second sentence with the following: The Department will determine when to obtain the quality control samples using the random-number feature of the mix design submittal and approval spreadsheet. The Department will randomly determine when to obtain the verification samples required in Subsections 402.03.03 and 402.03.04 using the Asphalt Mixture Sample Random Tonnage Generator.
Subsection:	402.03.02 Contractor Quality Control and Department Acceptance.
Part:	D) Testing Responsibilities.
Number:	3) VMA.
Revision:	Add the following paragraph below Number 3) VMA: Retain the AV/VMA specimens and one additional corresponding G_{mm} sample for 5 working days for mixture verification testing by the Department. For Specialty Mixtures, retain a mixture sample for 5 working days for mixture verification testing by the Department. When the Department's test results do not verify that the Contractor's quality control test results are within the acceptable tolerances according to Subsection 402.03.03, retain the samples and specimens from the affected sublot(s) for the duration of the project.
Subsection:	402.03.02 Contractor Quality Control and Department Acceptance.
Part:	D) Testing Responsibilities.
Number:	4) Density.
Revision:	Replace the second sentence of the Option A paragraph with the following: Perform coring by the end of the following work day.

Supplemental Specifications to the
Standard Specifications for Road and Bridge Construction, 2012 Edition
Effective with the August 22, 2014 Letting

Subsection: **Part:** **Number:** **Revision:**	402.03.02 Contractor Quality Control and Department Acceptance. D) Testing Responsibilities. 5) Gradation. Delete the second paragraph.
Subsection: **Part:** **Number:** **Revision:**	402.03.02 Contractor Quality Control and Department Acceptance. H) Unsatisfactory Work. 1) Based on Lab Data. Replace the second paragraph with the following: When the Engineer determines that safety concerns or other considerations prohibit an immediate shutdown, continue work and the Department will make an evaluation of acceptability according to Subsection 402.03.05.
Subsection: **Revision:**	402.03.03 Verification. Replace the first paragraph with the following: **402.03.03 Mixture Verification.** For volumetric properties, the Department will perform a minimum of one verification test for AC, AV, and VMA according to the corresponding procedures as given in Subsection 402.03.02. The Department will randomly determine when to obtain the verification sample using the Asphalt Mixture Sample Random Tonnage Generator. For specialty mixtures, the Department will perform one AC and one gradation determination per lot according to the corresponding procedures as given in Subsection 402.03.02. However, Department personnel will not perform AC determinations according to KM 64-405. The Contractor will obtain a quality control sample at the same time the Department obtains the mixture verification sample and perform testing according to the procedures given in Subsection 402.03.02. If the Contractor's quality control sample is verified by the Department's test results within the tolerances provided below, the Contractor's sample will serve as the quality control sample for the affected sublot. The Department may perform the mixture verification test on the Contractor's equipment or on the Department's equipment.
Subsection: **Part:** **Revision:**	402.03.03 Verification. A) Evaluation of Sublot(s) Verified by Department. Replace the third sentence of the second paragraph with the following: When the paired *t* -test indicates that the Contractor's data and Department's data are possibly not from the same population, the Department will investigate the cause for the difference according to Subsection 402.03.05 and implement corrective measures as the Engineer deems appropriate.
Subsection: **Part:** **Revision:**	402.03.03 Verification. B) Evaluation of Sublots Not Verified by Department. Replace the third sentence of the first paragraph with the following: When differences between test results are not within the tolerances listed below, the Department will resolve the discrepancy according to Subsection 402.03.05.

Supplemental Specifications to the
Standard Specifications for Road and Bridge Construction, 2012 Edition
Effective with the August 22, 2014 Letting

Subsection: **Part:** **Revision:**	402.03.03 Verification. B) Evaluation of Sublots Not Verified by Department. Replace the third sentence of the second paragraph with the following: When the *F* -test or *t* -test indicates that the Contractor's data and Department's data are possibly not from the same population, the Department will investigate the cause for the difference according to Subsection 402.03.05 and implement corrective measures as the Engineer deems appropriate.
Subsection: **Part:** **Revision:**	402.03.03 Verification. C) Test Data Patterns. Replace the second sentence with the following: When patterns indicate substantial differences between the verified and non-verified sublots, the Department will perform further comparative testing according to subsection 402.03.05.
Subsection: **Revision:**	402.03 CONSTRUCTION. Add the following subsection: **402.03.04 Testing Equipment and Technician Verification.** For mixtures with a minimum quantity of 20,000 tons and for every 20,000 tons thereafter, the Department will obtain an additional verification sample at random using the Asphalt Mixture Sample Random Tonnage Generator in order to verify the integrity of the Contractor's and Department's laboratory testing equipment and technicians. The Department will obtain a mixture sample of at least 150 lb at the asphalt mixing plant according to KM 64-425 and split it according to AASHTO R 47. The Department will retain one split portion of the sample and provide the other portion to the Contractor. At a later time convenient to both parties, the Department and Contractor will simultaneously reheat the sample to the specified compaction temperature and test the mixture for AV and VMA using separate laboratory equipment according to the corresponding procedures given in Subsection 402.03.02. The Department will evaluate the differences in test results between the two laboratories. When the difference between the results for AV or VMA is not within ± 2.0 percent, the Department will investigate and resolve the discrepancy according to Subsection 402.03.05.
Subsection: **Revision:**	402.03.04 Dispute Resolution. Change the subsection number to 402.03.05.
Subsection: **Part:** **Table:** **Revision:**	402.05 PAYMENT. Lot Pay Adjustment Schedule Compaction Option A Base and Binder Mixtures AC Replace the Deviation from JMF(%) that corresponds to a Pay Value of 0.95 to ±0.6.
Subsection: **Revision:**	403.02.10 Material Transfer Vehicle (MTV). Replace the first sentence with the following: In addition to the equipment specified above, provide a MTV with the following minimum characteristics:
Subsection: **Revision:**	412.02.09 Material Transfer Vehicle (MTV). Replace the paragraph with the following: Provide and utilize a MTV with the minimum characteristics outlined in section 403.02.10.

Supplemental Specifications to the
Standard Specifications for Road and Bridge Construction, 2012 Edition
Effective with the August 22, 2014 Letting

Subsection: **Revision:**	412.03.07 Placement and Compaction. Replace the first paragraph with the following: Use a MTV when placing SMA mixture in the driving lanes. The MTV is not required on ramps and/or shoulders unless specified in the contract. When the Engineer determines the use of the MTV is not practical for a portion of the project, the Engineer may waive its requirement for that portion of pavement by a letter documenting the waiver.
Subsection: **Revision:**	412.04 MEASUREMENT. Add the following subsection: 412.04.03. Material Transfer Vehicle (MTV). The Department will not measure the MTV for payment and will consider its use incidental to the asphalt mixture.
Subsection: **Part:** **Revision:**	501.03.19 Surface Tolerances and Testing Surface. B) Ride Quality. Add the following to the end of the first paragraph: The Department will specify if the ride quality requirements are Category A or Category B when ride quality is specified in the Contract. Category B ride quality requirements shall apply when the Department fails to classify which ride quality requirement will apply to the Contract.
Subsection: **Revision:**	603.03.06 Cofferdams. Replace the seventh sentence of paragraph one with the following: Submit drawings that are stamped by a Professional Engineer licensed in the Commonwealth of Kentucky.
Subsection: **Revision:**	605.03.04 Tack Welding. Insert the subsection and the following: 605.03.04 Tack Welding. The Department does not allow tack welding.
Subsection: **Part:** **Number:** **Revision:**	606.03.17 Special Requirements for Latex Concrete Overlays. A) Existing Bridges and New Structures. 1) Prewetting and Grout-Bond Coat. Add the following sentence to the last paragraph: Do not apply a grout-bond coat on bridge decks prepared by hydrodemolition.
Subsection: **Revision:**	609.03 Construction. Replace Subsection 609.03.01 with the following: 609.03.01 A) Swinging the Spans. Before placing concrete slabs on steel spans or precast concrete release the temporary erection supports under the bridge and swing the span free on its supports. 609.03.01 B) Lift Loops. Cut all lift loops flush with the top of the precast beam once the beam is placed in the final location and prior to placing steel reinforcement. At locations where lift loops are cut, paint the top of the beam with galvanized or epoxy paint.
Subsection: **Revision:**	611.03.02 Precast Unit Construction. Replace the first sentence of the subsection with the following: Construct units according to ASTM C1577, **replacing Table 1 (Design Requirements for Precast Concrete Box Sections Under Earth, Dead and HL-93 Live Load Conditions) with KY Table 1 (Precast Culvert KYHL-93 Design Table)**, and Section 605 with the following exceptions and additions:

Supplemental Specifications to the
Standard Specifications for Road and Bridge Construction, 2012 Edition
Effective with the August 22, 2014 Letting

Subsection: **Number:** **Revision:**	613.03.01 Design. 2) Replace "AASHTO Standard Specifications for Highway Bridges" with "AASHTO LRFD Bridge Design Specifications"
Subsection: **Revision:**	615.06.02 Add the following sentence to the end of the subsection. The ends of units shall be normal to walls and centerline except exposed edges shall be beveled ¾ inch.
Subsection: **Revision:**	615.06.03 Placement of Reinforcement in Precast 3-Sided Units. Replace the reference of 6.6 in the section to 615.06.06.
Subsection: **Revision:**	615.06.04 Placement of Reinforcement for Precast Endwalls. Replace the reference of 6.7 in the section to 615.06.07.
Subsection: **Revision:**	615.06.06 Laps, Welds, and Spacing for Precast 3-Sided Units. Replace the subsection with the following: Tension splices in the circumferential reinforcement shall be made by lapping. Laps may not be tack welded together for assembly purposes. For smooth welded wire fabric, the overlap shall meet the requirements of AASHTO 2012 Bridge Design Guide Section 5.11.2.5.2 and AASHTO 2012 Bridge Design Guide Section 5.11.6.3. For deformed welded wire fabric, the overlap shall meet the requirements of AASHTO 2012 Bridge Design Guide Section 5.11.2.5.1 and AASHTO 2012 Bridge Design Guide Section 5.11.6.2. The overlap of welded wire fabric shall be measured between the outer most longitudinal wires of each fabric sheet. For deformed billet-steel bars, the overlap shall meet the requirements of AASHTO 2012 Bridge Design Guide Section 5.11.2.1. For splices other than tension splices, the overlap shall be a minimum of 12" for welded wire fabric or deformed billet-steel bars. The spacing center to center of the circumferential wires in a wire fabric sheet shall be no less than 2 inches and no more than 4 inches. The spacing center to center of the longitudinal wires shall not be more than 8 inches. The spacing center to center of the longitudinal distribution steel for either line of reinforcing in the top slab shall be not more than 16 inches.
Subsection: **Revision:**	615.06.07 Laps, Welds, and Spacing for Precast Endwalls. Replace the subsection with the following: Splices in the reinforcement shall be made by lapping. Laps may not be tack welded together for assembly purposes. For smooth welded wire fabric, the overlap shall meet the requirements of AASHTO 2012 Bridge Design Guide Section 5.11.2.5.2 and AASHTO 2012 Bridge Design Guide Section 5.11.6.3. For deformed welded wire fabric, the overlap shall meet the requirements of AASHTO 2012 Bridge Design Guide Section 5.11.2.5.1 and AASHTO 2012 Bridge Design Guide Section 5.11.6.2. For deformed billet-steel bars, the overlap shall meet the requirements of AASHTO 2012 Bridge Design Guide Section 5.11.2.1. The spacing center-to-center of the wire fabric sheet shall not be less than 2 inches or more than 8 inches.

Supplemental Specifications to the
Standard Specifications for Road and Bridge Construction, 2012 Edition
Effective with the August 22, 2014 Letting

Subsection: **Revision:**	615.08.01 Type of Test Specimen. Replace the subsection with the following: Start-up slump, air content, unit weight, and temperature tests will be performed each day on the first batch of concrete. Acceptable start-up results are required for production of the first unit. After the first unit has been established, random acceptance testing is performed daily for each 50 yd^3 (or fraction thereof). In addition to the slump, air content, unit weight, and temperature tests, a minimum of one set of cylinders shall be required each time plastic property testing is performed.
Subsection: **Revision:**	615.08.02 Compression Testing. Delete the second sentence.
Subsection: **Revision:**	615.08.04 Acceptability of Core Tests. Delete the entire subsection.
Subsection: **Revision:**	615.12 Inspection. Add the following sentences to the end of the subsection: Units will arrive at jobsite with the "Kentucky Oval" stamped on the unit which is an indication of acceptable inspection at the production facility. Units shall be inspected upon arrival for any evidence of damage resulting from transport to the jobsite.
Subsection: **Revision:**	716.02.02 Paint. Replace sentence with the following: Conform to Section 821.
Subsection: **Revision:**	716.03 CONSTRUCTION. Replace bullet 5) with the following: 5) AASHTO Standard Specifications for Structural Supports for Highway Signs, Luminaires, and Traffic Signals, 2013-6th Edition with current interims,
Subsection: **Revision:**	716.03.02 Lighting Standard Installation. Replace the second sentence with the following: Regardless of the station and offset noted, locate all poles/bases behind the guardrail a minimum of four feet from the front face of the guardrail to the front face of the pole base.
Subsection: **Part:** **Revision:**	716.03.02 Lighting Standard Installation. A) Conventional Installation. Replace the third sentence with the following: Orient the transformer base so the door is positioned on the side away from on-coming traffic.
Subsection: **Part:** **Number:** **Revision:**	716.03.02 Lighting Standard Installation. A) Conventional Installation. 1) Breakaway Installation and Requirements. Replace the first sentence with the following: For breakaway supports, conform to Section 12 of the AASHTO Standard Specifications for Structural Supports for Highway Signs, Luminaires, and Traffic Signals, 2013-6th Edition with current interims.
Subsection: **Part:** **Revision:**	716.03.02 Lighting Standard Installation. B) High Mast Installation Replace the first sentence with the following: Install each high mast pole as noted on plans.
Subsection: **Part:** **Number:** **Revision:**	716.03.02 Lighting Standard Installation. B) High Mast Installation 2) Concrete Base Installation Modification of Chart and succeeding paragraphs within this section:

Supplemental Specifications to the
Standard Specifications for Road and Bridge Construction, 2012 Edition
Effective with the August 22, 2014 Letting

Drilled Shaft Depth Data							
Level Ground		3:1 Ground Slope		2:1 Ground Slope		1.5:1 Ground Slope (2)	
Soil	Rock	Soil	Rock	Soil	Rock	Soil	Rock
17 ft	7 ft	19 ft	7 ft	20 ft	7 ft	(1)	7 ft

Steel Requirements			
Vertical Bars		Ties or Spiral	
Size	Total	Size	Spacing or Pitch
#10	16	#4	12 inch

(1): Shaft length is 22' for cohesive soil only. For cohesionless soil, contact geotechnical branch for design.
(2): Do not construct high mast drilled shafts on ground slopes steeper than 1.5:1 without the approval of the Division of Traffic.

If rock is encountered during drilling operations and confirmed by the engineer to be of sound quality, the shaft is only required to be further advanced into the rock by the length of rock socket shown in the table. The total length of the shaft need not be longer than that of soil alone. Both longitudinal rebar length and number of ties or spiral length shall be adjusted accordingly.

If a shorter depth is desired for the drilled shaft, the contractor shall provide, for the state's review and approval, a detailed column design with individual site specific soil and rock analysis performed and approved by a Professional Engineer licensed in the Commonwealth of Kentucky.

Spiral reinforcement may be substituted for ties. If spiral reinforcement is used, one and one-half closed coils shall be provided at the ends of each spiral unit. Subsurface conditions consisting of very soft clay or very loose saturated sand could result in soil parameters weaker than those assumed. Engineer shall consult with the geotechnical branch if such conditions are encountered.

The bottom of the drilled hole shall be firm and thoroughly cleaned so no loose or compressible materials are present at the time of the concrete placement. If the drilled hole contains standing water, the concrete shall be placed using a tremie to displace water. Continuous concrete flow will be required to insure full displacement of any water.

The reinforcement and anchor bolts shall be adequately supported in the proper positions so no movement occurs during concrete placement. Welding of anchor bolts to the reinforcing cage is unacceptable, templates shall be used. Exposed portions of the foundation shall be formed to create a smooth finished surface. All forming shall be removed upon completion of foundation construction.

Subsection: 716.03.03 Trenching.
Part: A) Trenching of Conduit for Highmast Ducted Cables.
Revision: Add the following after the first sentence: If depths greater than 24 inches are necessary, obtain the Engineer's approval and maintain the required conduit depths coming into the junction boxes. No payment for additional junction boxes for greater depths will be allowed.

Supplemental Specifications to the
Standard Specifications for Road and Bridge Construction, 2012 Edition
Effective with the August 22, 2014 Letting

Subsection: **Part:** **Revision:**	716.03.03 Trenching. B) Trenching of Conduit for Non-Highmast Cables. Add the following after the second sentence: If depths greater than 24 inches are necessary for either situation listed previously, obtain the Engineer's approval and maintain the required conduit depths coming into the junction boxes. No payment for additional junction boxes for greater depths will be allowed.
Subsection: **Revision:**	716.03.10 Junction Boxes. Replace subsection title with the following: Electrical Junction Box.
Subsection: **Revision:**	716.04.07 Pole with Secondary Control Equipment. Replace the paragraph with the following: The Department will measure the quantity as each individual unit furnished and installed. The Department will not measure mounting the cabinet to the pole, backfilling, restoration, any necessary hardware to anchor pole, or electrical inspection fees, and will consider them incidental to this item of work. The Department will also not measure furnishing and installing electrical service conductors, specified conduits, meter base, transformer, service panel, fused cutout, fuses, lighting arrestors, photoelectrical control, circuit breaker, contactor, manual switch, ground rods, and ground wires and will consider them incidental to this item of work.
Subsection: **Revision:**	716.04.08 Lighting Control Equipment. Replace the paragraph with the following: The Department will measure the quantity as each individual unit furnished and installed. The Department will not measure constructing the concrete base, excavation, backfilling, restoration, any necessary anchors, or electrical inspection fees, and will consider them incidental to this item of work. The Department will also not measure furnishing and installing electrical service conductors, specified conduits, meter base, transformer, service panel, fused cutout, fuses, lighting arrestors, photoelectrical control, circuit breakers, contactor, manual switch, ground rods, and ground wires and will consider them incidental to this item of work.
Subsection: **Revision:**	716.04.09 Luminaire. Replace the first sentence with the following: The Department will measure the quantity as each individual unit furnished and installed.
Subsection: **Revision:**	716.04.10 Fused Connector Kits. Replace the first sentence with the following: The Department will measure the quantity as each individual unit furnished and installed.
Subsection: **Revision:**	716.04.13 Junction Box. Replace the subsection title with the following: Electrical Junction Box Type Various.
Subsection: **Part:** **Revision:**	716.04.13 Junction Box. A) Junction Electrical. Rename A) Junction Electrical to the following: A) Electrical Junction Box.
Subsection: **Revision:**	716.04.14 Trenching and Backfilling. Replace the second sentence with the following: The Department will not measure excavation, backfilling, underground utility warning tape (if required), the restoration of disturbed areas to original condition, and will consider them incidental to this item of work.

Supplemental Specifications to the
Standard Specifications for Road and Bridge Construction, 2012 Edition
Effective with the August 22, 2014 Letting

Subsection: **Revision:**	716.04.18 Remove Lighting. Replace the paragraph with the following: The Department will measure the quantity as a lump sum for the removal of lighting equipment. The Department will not measure the disposal of all equipment and materials off the project by the contractor. The Department also will not measure the transportation of the materials and will consider them incidental to this item of work.
Subsection: **Revision:**	716.04.20 Bore and Jack Conduit. Replace the paragraph with the following: The Department will measure the quantity in linear feet. This item shall include all work necessary for boring and installing conduit under an existing roadway. Construction methods shall be in accordance with Sections 706.03.02, paragraphs 1, 2, and 4.
Subsection: **Revision:**	716.05 PAYMENT. Replace items 04810-04811, 20391NS835 and, 20392NS835 under Code, Pay Item, and Pay Unit with the following: Code — Pay Item — Pay Unit 04810 — Electrical Junction Box — Each 04811 — Electrical Junction Box Type B — Each 20391NS835 — Electrical Junction Box Type A — Each 20392NS835 — Electrical Junction Box Type C — Each
Subsection: **Revision:**	723.02.02 Paint. Replace sentence with the following: Conform to Section 821.
Subsection: **Revision:**	723.03 CONSTRUCTION. Replace bullet 5) with the following: 5) AASHTO Standard Specifications for Structural Supports for Highway Signs, Luminaires, and Traffic Signals, 2013-6th Edition with current interims,
Subsection: **Revision:**	723.03.02 Poles and Bases Installation. Replace the first sentence with the following: Regardless of the station and offset noted, locate all poles/bases behind the guardrail a minimum of four feet from the front face of the guardrail to the front face of the pole base.
Subsection: **Part:** **Revision:**	723.03.02 Poles and Bases Installation. A) Steel Strain and Mastarm Poles Installation Replace the second paragraph with the following: For concrete base installation, see Section 716.03.02, B), 2), Paragraphs 2-7. Drilled shaft depth shall be based on the soil conditions encountered during drilling and slope condition at the site. Refer to the design chart below:
Subsection: **Part:** **Revision:**	723.03.02 Poles and Bases Installation. B) Pedestal or Pedestal Post Installation. Replace the fourth sentence of the paragraph with the following: For breakaway supports, conform to Section 12 of the AASHTO Standard Specifications for Structural Supports for Highway Signs, Luminaires, and Traffic Signals, 2013-6th Edition with current interims.

Supplemental Specifications to the
Standard Specifications for Road and Bridge Construction, 2012 Edition
Effective with the August 22, 2014 Letting

Subsection: **Part:** **Revision:**	723.03.03 Trenching. A) Under Roadway. Add the following after the second sentence: If depths greater than 24 inches are necessary, obtain the Engineer's approval and maintain ether required conduit depths coming into the junction boxes. No payment for additional junction boxes for greater depths will be allowed.
Subsection: **Revision:**	723.03.11 Wiring Installation. Add the following sentence between the fifth and sixth sentences: Provide an extra two feet of loop wire and lead-in past the installed conduit in poles, pedestals, and junction boxes.
Subsection: **Revision:**	723.03.12 Loop Installation. Replace the fourth sentence of the 2nd paragraph with the following: Provide an extra two feet of loop wire and lead-in past the installed conduit in poles, pedestals, and junction boxes.
Subsection: **Revision:**	723.04.02 Junction Box. Replace subsection title with the following: Electrical Junction Box Type Various.
Subsection: **Revision:**	723.04.03 Trenching and Backfilling. Replace the second sentence with the following: The Department will not measure excavation, backfilling, underground utility warning tape (if required), the restoration of disturbed areas to original condition, and will consider them incidental to this item of work.
Subsection: **Revision:**	723.04.10 Signal Pedestal. Replace the second sentence with the following: The Department will not measure excavation, concrete, reinforcing steel, specified conduits, fittings, ground rod, ground wire, backfilling, restoring disturbed areas, or other necessary hardware and will consider them incidental to this item of work.
Subsection: **Revision:**	723.04.15 Loop Saw Slot and Fill. Replace the second sentence with the following: The Department will not measure sawing, cleaning and filling induction loop saw slot, loop sealant, backer rod, and grout and will consider them incidental to this item of work.
Subsection: **Revision:**	723.04.16 Pedestrian Detector. Replace the paragraph with the following: The Department will measure the quantity as each individual unit furnished, installed and connected to pole/pedestal. The Department will not measure installing R10-3e (with arrow) sign, furnishing and installing mounting hardware for sign and will consider them incidental to this item of work.
Subsection: **Revision:**	723.04.18 Signal Controller- Type 170. Replace the second sentence with the following: The Department will not measure constructing the concrete base or mounting the cabinet to the pole, connecting the signal and detectors, excavation, backfilling, restoration, any necessary pole mounting hardware, electric service, or electrical inspection fees and will consider them incidental to this item of work. The Department will also not measure furnishing and connecting the induction of loop amplifiers, pedestrian isolators, load switches, model 400 modem card; furnishing and installing electrical service conductors, specified conduits, anchors, meter base, fused cutout, fuses, ground rods, ground wires and will consider them incidental to this item of work.

Supplemental Specifications to the
Standard Specifications for Road and Bridge Construction, 2012 Edition
Effective with the August 22, 2014 Letting

Subsection: **Revision:**	723.04.20 Install Signal Controller - Type 170. Replace the paragraph with the following: The Department will measure the quantity as each individual unit installed. The Department will not measure constructing the concrete base or mounting the cabinet to the pole, connecting the signal and detectors, and excavation, backfilling, restoration, any necessary pole mounting hardware, electric service, or electrical inspection fees and will consider them incidental to this item of work. The Department will also not measure connecting the induction loop amplifiers, pedestrian, isolators, load switches, model 400 modem card; furnishing and installing electrical service conductors, specified conduits, anchors, meter base, fused cutout, fuses, ground rods, ground wires and will consider them incidental to this item of work.
Subsection: **Revision:**	723.04.22 Remove Signal Equipment. Replace the paragraph with the following: The Department will measure the quantity as a lump sum removal of signal equipment. The Department will not measure the return of control equipment and signal heads to the Department of Highways as directed by the District Traffic Engineer. The Department also will not measure the transportation of materials of the disposal of all other equipment and materials off the project by the contractor and will consider them incidental to this item of work.
Subsection: **Revision:**	723.04.28 Install Pedestrian Detector Audible. Replace the second sentence with the following: The Department will not measure installing sign R10-3e (with arrow) and will consider it incidental to this item of work.
Subsection: **Revision:**	723.04.29 Audible Pedestrian Detector. Replace the second sentence with the following: The Department will not measure furnishing and installing the sign R10-3e (with arrow) and will consider it incidental to this item of work.
Subsection: **Revision:**	723.04.30 Bore and Jack Conduit. Replace the paragraph with the following: The Department will measure the quantity in linear feet. This item shall include all work necessary for boring and installing conduit under an existing roadway. Construction methods shall be in accordance with Sections 706.03.02, paragraphs 1, 2, and 4.
Subsection: **Revision:**	723.04.31 Install Pedestrian Detector. Replace the paragraph with the following: The Department will measure the quantity as each individual unit installed and connected to pole/pedestal. The Department will not measure installing sign R 10-3e (with arrow) and will consider it incidental to this item of work.
Subsection: **Revision:**	723.04.32 Install Mast Arm Pole. Replace the second sentence with the following: The Department will not measure arms, signal mounting brackets, anchor bolts, or any other necessary hardware and will consider them incidental to this item of work.
Subsection: **Revision:**	723.04.33 Pedestal Post. Replace the second sentence with the following: The Department will not measure excavation, concrete, reinforcing steel, anchor bolts, conduit, fittings, ground rod, ground wire, backfilling, restoration, or any other necessary hardware and will consider them incidental to this item of work.

Supplemental Specifications to the
Standard Specifications for Road and Bridge Construction, 2012 Edition
Effective with the August 22, 2014 Letting

Subsection: **Revision:**	723.04.36 Traffic Signal Pole Base. Replace the second sentence with the following: The Department will not measure excavation, reinforcing steel, anchor bolts, specified conduits, ground rods, ground wires, backfilling, or restoration and will consider them incidental to this item of work.
Subsection: **Revision:**	723.04.37 Install Signal Pedestal. Replace the second sentence with the following: The Department will not measure excavation, concrete, reinforcing steel, anchor bolts, specified conduits, fittings, ground rod, ground wire, backfilling, restoration, or any other necessary hardware and will consider them incidental to this item of work.
Subsection: **Revision:**	723.04.38 Install Pedestal Post. Replace the second sentence with the following: The Department will not measure excavation, concrete, reinforcing steel, anchor bolts, specified conduits, fittings, ground rod, ground wire, backfilling, restoration, or any other necessary hardware and will consider them incidental to this item of work.
Subsection: **Revision:**	723.05 PAYMENT. Replace items 04810-04811, 20391NS835 and, 20392NS835 under Code, Pay Item, and Pay Unit with the following: Code — Pay Item — Pay Unit 04810 — Electrical Junction Box — Each 04811 — Electrical Junction Box Type B — Each 20391NS835 — Electrical Junction Box Type A — Each 20392NS835 — Electrical Junction Box Type C — Each
Subsection: **Revision:**	804.01.02 Crushed Sand. Delete last sentence of the section.
Subsection: **Revision:**	804.01.06 Slag. Add subsection and following sentence. Provide blast furnace slag sand where permitted. The Department will allow steel slag sand only in asphalt surface applications.
Subsection: **Revision:**	804.04 Asphalt Mixtures. Replace the subsection with the following: Provide natural, crushed, conglomerate, or blast furnace slag sand, with the addition of filler as necessary, to meet gradation requirements. The Department will allow any combination of natural, crushed, conglomerate or blast furnace slag sand when the combination is achieved using cold feeds at the plant. The Engineer may allow other fine aggregates.
Subsection: **Revision:**	806.03.01 General Requirements. Replace the second sentence of the paragraph with the following: Additionally, the material must have a minimum solubility of 99.0 percent when tested according to AASHTO T 44 and PG 76-22 must exhibit a minimum recovery of 60 percent, with a J_{NR} (nonrecoverable creep compliance) between 0.1 and 0.5, when tested according to AASHTO TP 70.

Supplemental Specifications to the Standard Specifications for Road and Bridge Construction, 2012 Edition Effective with the August 22, 2014 Letting

Subsection: 806.03.01 General Requirements.
Table: PG Binder Requirements and Price Adjustment Schedule
Revision: Replace the Elastic Recovery, % [3] (AASHTO T301) and all corresponding values in the table with the following:

Test	Specification	100% Pay	90% Pay	80% Pay	70% Pay	50%Pay[1]
MSCR recovery, % [3] (AASHTO TP 70)	60 Min.	≥58	56	55	54	<53

Subsection: 806.03.01 General Requirements.
Table: PG Binder Requirements and Price Adjustment Schedule
Superscript: (3)
Revision: Replace [3] with the following:
Perform testing at 64°C.

Subsection: 813.04 Gray Iron Castings.
Revision: Replace the reference to "AASHTO M105" with "ASTM A48".

Subsection: 813.09.02 High Strength Steel Bolts, Nuts, and Washers.
Number: A) Bolts.
Revision: Delete first paragraph and "Hardness Number" Table. Replace with the following:
A) Bolts. Conform to ASTM A325 (AASHTO M164) or ASTM A490 (AASHTO 253) as applicable.

Subsection: 814.04.02 Timber Guardrail Posts.
Revision: Third paragraph, replace the reference to "AWPA C14" with "AWPA U1, Section B, Paragraph 4.1".

Subsection: 814.04.02 Timber Guardrail Posts.
Revision: Replace the first sentence of the fourth paragraph with the following:
Use any of the species of wood for round or square posts covered under AWPA U1.

Subsection: 814.04.02 Timber Guardrail Posts.
Revision: Fourth paragraph, replace the reference to "AWPA C2" with "AWPA U1, Section B, Paragraph 4.1".

Subsection: 814.04.02 Timber Guardrail Posts.
Revision: Delete the second sentence of the fourth paragraph.

Subsection: 814.05.02 Composite Plastic.
Revision: 1) Add the following to the beginning of the first paragraph: Select composite offset blocks conforming to this section and assure blocks are from a manufacturer included on the Department's List of Approved Materials.
2) Delete the last paragraph of the subsection.

Subsection: 816.07.02 Wood Posts and Braces.
Revision: First paragraph, replace the reference to "AWPA C5" with "AWPA U1, Section B, Paragraph 4.1".

Subsection: 816.07.02 Wood Posts and Braces.
Revision: Delete the second sentence of the first paragraph.

Subsection: 818.07 Preservative Treatment.
Revision: First paragraph, replace all references to "AWPA C14" with "AWPA U1, Section A".

Supplemental Specifications to the
Standard Specifications for Road and Bridge Construction, 2012 Edition
Effective with the August 22, 2014 Letting

Subsection: **Revision:**	834.14 Lighting Poles. Replace the first sentence with the following: Lighting pole design shall be in accordance with loading and allowable stress requirements of the AASHTO Standard Specifications for Structural Supports for Highway Signs, Luminaires, and Traffic Signals, 2013-6th Edition with current interims, with the exception of the following: The Cabinet will waive the requirement stated in the first sentence of Section 5.14.6.2 – Reinforced Holes and Cutouts for high mast poles (only). The minimum diameter at the base of the pole shall be 22 inches for high mast poles (only).
Subsection **Revision:**	834.14.03 High Mast Poles. Remove the second and fourth sentence from the first paragraph.
Subsection **Revision:**	834.14.03 High Mast Poles. Replace the third paragraph with the following: Provide calculations and drawings that are stamped by a Professional Engineer licensed in the Commonwealth of Kentucky.
Subsection: **Revision:**	834.14.03 High Mast Poles. Replace paragraph six with the following: Provide a pole section that conforms to ASTM A 595 grade A with a minimum yield strength of 55 KSI or ASTM A 572 with a minimum yield strength of 55 KSI. Use tubes that are round or 16 sided with a four inch corner radius, have a constant linear taper of .144 in/ft and contain only one longitudinal seam weld. Circumferential welded tube butt splices and laminated tubes are not permitted. Provide pole sections that are telescopically slip fit assembled in the field to facilitate inspection of interior surface welds and the protective coating. The minimum length of the telescopic slip splices shall be 1.5 times the inside diameter of the exposed end of the female section. Use longitudinal seam welds as commended in Section 5.15 of the AASHTO 2013 Specifications. The thickness of the transverse base shall not be less than 2 inches. Plates shall be integrally welded to the tubes with a telescopic welded joint or a full penetration groove weld with backup bar. The handhole cover shall be removable from the handhole frame. One the frame side opposite the hinge, provide a mechanism on the handhole cover/frame to place the Department's standard padlock as specified in Section 834.25. The handhole frame shall have two stainless studs installed opposite the hinge to secure the handhole cover to the frame which includes providing stainless steel wing nuts and washers. The handhole cover shall be manufactured from 0.25 inch thick galvanized steel (ASTM A 153) and have a neoprene rubber gasket that is permanently secured to the handhole frame to insure weather-tight protection. The hinge shall be manufactured from 7-guage stainless steel to provide adjustability to insure weather-tight fit for the cover. The minimum clear distance between the transverse plate and the bottom opening of the handhole shall not be less than the diameter of the bottom tube of the pole but needs to be at least 15 inches. Provide products that are hot-dip galvanized to the requirements of either ASTM A123 (fabricated products) or ASTM A 153 (hardware items).
Subsection: **Revision:**	834.16 ANCHOR BOLTS. Insert the following sentence at the beginning of the paragraph: The anchor bolt design shall follow the NCHRP Report 494 Section 2.4 and NCHRP 469 Appendix A Specifications.

Supplemental Specifications to the
Standard Specifications for Road and Bridge Construction, 2012 Edition
Effective with the August 22, 2014 Letting

Subsection: **Revision:**	834.17.01 Conventional. Add the following sentence after the second sentence: Provide a waterproof sticker mounted on the bottom of the housing that is legible from the ground and indicates the wattage of the fixture by providing the first two numbers of the wattage.
Subsection: **Revision:**	834.21.01 Waterproof Enclosures. Replace the last five sentences in the second paragraph with the following sentences: Provide a cabinet door with a louvered air vent, filter-retaining brackets and an easy to clean metal filter. Provide a cabinet door that is keyed with a factory installed standard no. 2 corbin traffic control key. Provide a light fixture with switch and bulb. Use a 120-volt fixture and utilize a L.E.D. bulb (equivalent to 60 watts minimum). Fixture shall be situated at or near the top of the cabinet and illuminate the contents of the cabinet. Provide a 120 VAC GFI duplex receptacle in the enclosure with a separate 20 amp breaker.
Subsection: **Revision:**	835.07 Traffic Poles. Replace the first sentence of the first paragraph with the following: Pole diameter and wall thickness shall be calculated in accordance with the AASHTO Standard Specifications for Structural Supports for Highway Signs, Luminaires, and Traffic Signals, 2013-6th Edition with current interims.
Subsection: **Revision:**	835.07 Traffic Poles. *Replace the first sentence of the fourth paragraph with the following: Ensure transverse plates have a thickness ≥ 2 inches. *Add the following sentence to the end of the fourth paragraph: The bottom pole diameter shall not be less than 16.25 inches.
Subsection: **Revision:**	835.07 Traffic Poles. Replace the third sentence of the fifth paragraph with the following: For anchor bolt design, pole forces shall be positioned in such a manner to maximize the force on any individual anchor bolt regardless of the actual anchor bolt orientation with the pole.
Subsection: **Revision:**	835.07 Traffic Poles. Replace the first and second sentence of the sixth paragraph with the following: The pole handhole shall be 25 inches by 6.5 inches. The handhole cover shall be removable from the handhole frame. On the frame side opposite the hinge, provide a mechanism on the handhole cover/frame to place the Department's standard padlock as specified in Section 834.25. The handhole frame shall have two stainless studs installed opposite the hinge to secure the handhole cover to the frame which includes providing stainless steel wing nuts and washers. The handhole cover shall be manufactured from 0.25 inch thick galvanized steel (ASTM 153) and have a neoprene rubber gasket that is permanently secured to the handhole frame to insure weather-tight protection. The hinge shall be manufactured from 7 gauge stainless steel to provide adjustability to insure a weather-tight fit for the cover. The minimum clear distance between the transverse plate and the bottom opening of the handhole shall not be less than the diameter of the bottom tube but needs to be at least 12 inches.

Supplemental Specifications to the Standard Specifications for Road and Bridge Construction, 2012 Edition Effective with the August 22, 2014 Letting

Subsection: **Revision:**	835.07 Traffic Poles. *Replace the first sentence of the last paragraph with the following: Provide calculations and drawings that are stamped by a Professional Engineer licensed in the Commonwealth of Kentucky. *Replace the third sentence of the last paragraph with the following: All tables referenced in 835.07 are found in the AASHTO Standard Specifications for Structural Supports for Highway Signs, Luminaires, and Traffic Signals, 2013-6th Edition with current interims.
Subsection: **Revision:**	835.07.01 Steel Strain Poles. Replace the second sentence of the second paragraph with the following: The detailed analysis shall be certified by a Professional Engineer licensed in the Commonwealth of Kentucky.
Subsection: **Revision:**	835.07.01 Steel Strain Poles. Replace number 7. after the second paragraph with the following: 7. Fatigue calculations should be shown for all fatigue related connections. Provide the corresponding detail, stress category and example from table 11.9.3.1-1.
Subsection: **Revision:**	835.07.02 Mast Arm Poles. Replace the second sentence of the fourth paragraph with the following: The detailed analysis shall be certified by a Professional Engineer licensed in the Commonwealth of Kentucky.
Subsection: **Revision:**	835.07.02 Mast Arm Poles. Replace number 7) after the fourth paragraph with the following: 7) Fatigue calculations should be shown for all fatigue related connections. Provide the corresponding detail, stress category and example from table 11.9.3.1-1.
Subsection: **Revision:**	835.07.03 Anchor Bolts. Add the following to the end of the paragraph: There shall be two steel templates (one can be used for the headed part of the anchor bolt when designed in this manner) provided per pole. Templates shall be contained within a 26.5 inch diameter. All templates shall be fully galvanized (ASTM A 153).
Subsection: **Revision:**	835.16.05 Optical Units. Replace the 3rd paragraph with the following: The list of certified products can be found on the following website: http://www.intertek.com.
Subsection: **Revision:**	835.19.01 Pedestrian Detector Body. Replace the first sentence with the following: Provide a four holed pole mounted aluminum rectangular housing that is compatible with the pedestrian detector.
Subsection: **Table:** **Revision:**	843.01.01 Geotextile Fabric. TYPE I FABRIC GEOTEXTILES FOR SLOPE PROTECTION AND CHANNEL LINING Add the following to the chart: Property — Minimum Value(1) — Test Method CBR Puncture (lbs) — 494 — ASTM D6241 Permittivity (1/s) — 0.7 — ASTM D4491

Supplemental Specifications to the
Standard Specifications for Road and Bridge Construction, 2012 Edition
Effective with the August 22, 2014 Letting

Subsection: 843.01.01 Geotextile Fabric.
Table: TYPE II FABRIC GEOTEXTILES FOR UNDERDRAINS
Revision: Add the following to the chart:

Property	Minimum Value[1]	Test Method
CBR Puncture (lbs)	210	ASTM D6241
Permittivity (1/s)	0.5	ASTM D4491

Subsection: 843.01.01 Geotextile Fabric.
Table: TYPE III FABRIC GEOTEXTILES FOR SUBGRADE OR EMBANKMENT STABILIZATION
Revision: Add the following to the chart:

Property	Minimum Value[1]	Test Method
CBR Puncture (lbs)	370	ASTM D6241
Permittivity (1/s)	0.05	ASTM D4491

Subsection: 843.01.01 Geotextile Fabric.
Table: TYPE IV FABRIC GEOTEXTILES FOR EMBANKMENT DRAINAGE BLANKETS AND PAVEMENT EDGE DRAINS
Revision: Add the following to the chart:

Property	Minimum Value[1]	Test Method
CBR Puncture (lbs)	309	ASTM D6241
Permittivity (1/s)	0.5	ASTM D4491

Subsection: 843.01.01 Geotextile Fabric.
Table: TYPE V HIGH STRENGTH GEOTEXTILE FABRIC
Revision: Make the following changes to the chart:

Property	Minimum Value[1]	Test Method
CBR Puncture (lbs)	618	ASTM D6241
Grab Strength (lbs)	700	ASTM D4632
Apparent Opening Size	U.S. #40[3]	ASTM D4751

[3] Maximum average roll value.

PART III

EMPLOYMENT, WAGE AND RECORD REQUIREMENTS

TRANSPORTATION CABINET
DEPARTMENT OF HIGHWAYS

LABOR AND WAGE REQUIREMENTS
APPLICABLE TO OTHER THAN FEDERAL-AID SYSTEM PROJECTS

I. Application
II. Nondiscrimination of Employees (KRS 344)
III. Payment of Predetermined Minimum Wages
IV. Statements and Payrolls

I. APPLICATION

1. These contract provisions shall apply to all work performed on the contract by the contractor with his own organization and with the assistance of workmen under his immediate superintendence and to all work performed on the contract by piecework, station work or by subcontract. The contractor's organization shall be construed to include only workmen employed and paid directly by the contractor and equipment owned or rented by him, with or without operators.

2. The contractor shall insert in each of his subcontracts all of the stipulations contained in these Required Provisions and such other stipulations as may be required.

3. A breach of any of the stipulations contained in these Required Provisions may be grounds for termination of the contract.

II. NONDISCRIMINATION OF EMPLOYEES

AN ACT OF THE KENTUCKY
GENERAL ASSEMBLY TO PREVENT
DISCRIMINATION IN EMPLOYMENT
KRS CHAPTER 344
EFFECTIVE JUNE 16, 1972

The contract on this project, in accordance with KRS Chapter 344, provides that during the performance of this contract, the contractor agrees as follows:

1. The contractor shall not fail or refuse to hire, or shall not discharge any individual, or otherwise discriminate against an individual with respect to his compensation, terms, conditions, or privileges of employment, because of such individual's race, color, religion, national origin, sex, disability or age (between forty and seventy); or limit, segregate, or classify his employees in any way which would deprive or tend to deprive an individual of employment opportunities or otherwise adversely affect his status as an employee, because of such individual's race, color, religion, national origin, sex, disability or age (between forty and seventy). The contractor agrees to post in conspicuous places, available to employees and applicants for employment, notices to be provided setting forth the provisions of this nondiscrimination clause.

2. The contractor shall not print or publish or cause to be printed or published a notice or advertisement relating to employment by such an employer or membership in or any classification or referral for employment by the employment agency, indicating any preference, limitation, specification, or discrimination, based on race, color, religion, national origin, sex, disability or age (between forty and seventy), except that such notice or advertisement may indicate a preference, limitation, or specification based on religion, or national origin when religion, or national origin is a bona fide occupational qualification for employment.

3. If the contractor is in control of apprenticeship or other training or retraining, including on-the-job training programs, he shall not discriminate against an individual because of his race, color, religion, national origin, sex, disability or age (between forty and seventy), in admission to, or employment in any program established to provide apprenticeship or other training.

4. The contractor will send to each labor union or representative of workers with which he has a collective bargaining agreement or other contract or understanding, a notice to be provided advising the said labor union or workers' representative of the contractor's commitments under this section, and shall post copies of the notice in conspicuous places available to employees and applicants for employment. The contractor will take such action with respect to any subcontract or purchase order as the administrating agency may direct as a means of enforcing such provisions, including sanctions for non-compliance.

III. PAYMENT OF PREDETERMINED MINIMUM WAGES

1. These special provisions are supplemented elsewhere in the contract by special provisions which set forth certain predetermined minimum wage rates. The contractor shall pay not less than those rates.

2. The minimum wage determination schedule shall be posted by the contractor, in a manner prescribed by the Department of Highways, at the site of the work in prominent places where it can be easily seen by the workers.

IV. STATEMENTS AND PAYROLLS

1. All contractors and subcontractors affected by the terms of KRS 337.505 to 337.550 shall keep full and accurate payroll records covering all disbursements of wages to their employees to whom they are required to pay not less than the prevailing rate of wages. Payrolls and basic records relating thereto will be maintained during the course of the work and preserved for a period of one (1) year from the date of completion of this contract.

2. The payroll records shall contain the name, address and social security number of each employee, his correct classification, rate of pay, daily and weekly number of hours worked, itemized deductions made and actual wages paid.

3. The contractor shall make his daily records available at the project site for inspection by the State Department of Highways contracting office or his authorized representative.

Periodic investigations shall be conducted as required to assure compliance with the labor provisions of the contract. Interrogation of employees and officials of the contractor shall be permitted during working hours.

Aggrieved workers, Highway Managers, Assistant District Engineers, Resident Engineers and Project Engineers shall report all complaints and violations to the Division of Contract Procurement.

The contractor shall be notified in writing of apparent violations. The contractor may correct the reported violations and notify the Department of Highways of the action taken or may request an informal hearing. The request for hearing shall be in writing within ten (10) days after receipt of the notice of the reported violation. The contractor may submit

records and information which will aid in determining the true facts relating to the reported violations.

Any person or organization aggrieved by the action taken or the findings established as a result of an informal hearing by the Division of Contract Procurement may request a formal hearing.

4. The wages of labor shall be paid in legal tender of the United States, except that this condition will be considered satisfied if payment is made by a negotiable check, on a solvent bank, which may be cashed readily by the employee in the local community for the full amount, without discount or collection charges of any kind. Where checks are used for payments, the contractor shall make all necessary arrangements for them to be cashed and shall give information regarding such arrangements.

5. No fee of any kind shall be asked or accepted by the contractor or any of his agents from any person as a condition of employment on the project.

6. No laborers shall be charged for any tools used in performing their respective duties except for reasonably avoidable loss or damage thereto.

7. Every employee on the work covered by this contract shall be permitted to lodge, board, and trade where and with whom he elects and neither the contractor nor his agents, nor his employees shall directly or indirectly require as a condition of employment that an employee shall lodge, board or trade at a particular place or with a particular person.

8. Every employee on the project covered by this contract shall be an employee of either the prime contractor or an approved subcontractor.

9. No charge shall be made for any transportation furnished by the contractor or his agents to any person employed on the work.

10. No individual shall be employed as a laborer or mechanic on this contract except on a wage basis, but this shall not be construed to prohibit the rental of teams, trucks or other equipment from individuals.

No Covered employee may be employed on the work except in accordance with the classification set forth in the schedule mentioned above; provided, however, that in the event additional classifications are required, application shall be made by the contractor to the Department of Highways and (1) the Department shall request appropriate classifications and rates from the proper agency, or (2) if there is urgent need for additional classification to avoid undue delay in the work, the contractor may employ such workmen at rates deemed comparable to rates established for similar classifications provided he has made written application through the Department of Highways, addressed to the proper agency, for the supplemental rates. The contractor shall retroactively adjust, upon receipt of the supplemental rates schedule, the wages of any employee paid less than the established rate and may adjust the wages of any employee overpaid.

11. No contractor or subcontractor contracting for any part of the contract work which may require or involve the employment of laborers or mechanics shall require or permit any laborer or mechanic in any work-week in which he is employed on such work, to work in excess of eight hours in any calendar day or in excess of forty hours in such work-week unless such laborer or mechanic receives compensation at a rate not less than one and one half times his basic rate of pay for all hours worked in excess of eight hours in any calendar day or in excess of forty hours in such work-week. A laborer, workman or mechanic and an employer may enter into a written agreement or a collective bargaining agreement to work more than eight (8) hours a calendar day but not more than ten (10) hours a calendar day for the straight time hourly rate. This agreement shall be in writing and shall be executed prior to the employee working in excess of eight (8) hours, but not more than ten (10) hours, in any one (1) calendar day.

12. Payments to the contractor may be suspended or withheld due to failure of the contractor to pay any laborer or mechanic employed or working on the site of the work, all or part of the wages required under the terms of the contract. The Department may suspend or withhold payments only after the contractor has been given written notice of the alleged violation and the contractor has failed to comply with the wage determination of the Department of Highways.

13. Contractors and subcontractors shall comply with the sections of Kentucky Revised Statutes, Chapter 337 relating to contracts for Public Works.

Revised 2-16-95

EXECUTIVE BRANCH CODE OF ETHICS

In the 1992 regular legislative session, the General Assembly passed and Governor Brereton Jones signed Senate Bill 63 (codified as KRS 11A), the Executive Branch Code of Ethics, which states, in part:

> KRS 11A.040 (6) provides:
>
> No present or former public servant shall, within six (6) months of following termination of his office or employment, accept employment, compensation or other economic benefit from any person or business that contracts or does business with the state in matters in which he was directly involved during his tenure. This provision shall not prohibit an individual from returning to the same business, firm, occupation, or profession in which he was involved prior to taking office or beginning his term of employment, provided that, for a period of six (6) months, he personally refrains from working on any matter in which he was directly involved in state government. This subsection shall not prohibit the performance of ministerial functions, including, but not limited to, filing tax returns, filing applications for permits or licenses, or filing incorporation papers.
>
> KRS 11A.040 (8) states:
>
> A former public servant shall not represent a person in a matter before a state agency in which the former public servant was directly involved, for a period of one (1) year after the latter of:
>
> a) The date of leaving office or termination of employment; or
> b) The date the term of office expires to which the public servant was elected.

This law is intended to promote public confidence in the integrity of state government and to declare as public policy the idea that state employees should view their work as a public trust and not as a way to obtain private benefits.

If you have worked for the executive branch of state government within the past six months, you may be subject to the law's prohibitions. The law's applicability may be different if you hold elected office or are contemplating representation of another before a state agency.

Also, if you are affiliated with a firm which does business with the state and which employs former state executive-branch employees, you should be aware that the law may apply to them.

In case of doubt, the law permits you to request an advisory opinion from the Executive Branch Ethics Commission, Room 136, Capitol Building, 700 Capitol Avenue, Frankfort, Kentucky 40601; telephone (502) 564-7954.

Kentucky Equal Employment Opportunity Act of 1978

The requirements of the Kentucky Equal Employment Opportunity Act of 1978 (KRS 45.560-45.640) shall apply to this Contract. The apparent low Bidder will be required to submit EEO forms to the Division of Construction Procurement, which will then forward to the Finance and Administration Cabinet for review and approval. No award will become effective until all forms are submitted and EEO/CC has certified compliance. The required EEO forms are as follows:

- EEO-1: Employer Information Report
- Affidavit of Intent to Comply
- Employee Data Sheet
- Subcontractor Report

These forms are available on the Finance and Administration's web page under ***Vendor Information, Standard Attachments and General Terms*** at the following address: **https://www.eProcurement.ky.gov**.

Bidders currently certified as being in compliance by the Finance and Administration Cabinet may submit a copy of their approval letter in lieu of the referenced EEO forms.

For questions or assistance please contact the Finance and Administration Cabinet by email at **finance.contractcompliance@ky.gov** or by phone at 502-564-2874.

General Decision Number: KY150102 01/30/2015 KY102

Superseded General Decision Number: KY20140102

State: Kentucky

Construction Type: Highway

Counties: Allen, Ballard, Butler, Caldwell, Calloway, Carlisle, Christian, Crittenden, Daviess, Edmonson, Fulton, Graves, Hancock, Henderson, Hickman, Hopkins, Livingston, Logan, Lyon, Marshall, McCracken, McLean, Muhlenberg, Ohio, Simpson, Todd, Trigg, Union, Warren and Webster Counties in Kentucky.

HIGHWAY CONSTRUCTION PROJECTS (excluding tunnels, building structures in rest area projects & railroad construction; bascule, suspension & spandrel arch bridges designed for commercial navigation, bridges involving marine construction; and other major bridges).

Note: Executive Order (EO) 13658 establishes an hourly minimum wage of $10.10 for 2015 that applies to all contracts subject to the Davis-Bacon Act for which the solicitation is issued on or after January 1, 2015. If this contract is covered by the EO, the contractor must pay all workers in any classification listed on this wage determination at least $10.10 (or the applicable wage rate listed on this wage determination, if it is higher) for all hours spent performing on the contract. The EO minimum wage rate will be adjusted annually. Additional information on contractor requirements and worker protections under the EO is available at www.dol.gov/whd/govcontracts.

Modification Number	Publication Date
0	01/02/2015
1	01/30/2015

BRIN0004-002 06/01/2014

BALLARD, BUTLER, CALDWELL, CARLISLE, CRITTENDEN, DAVIESS, EDMONSON, FULTON, GRAVES, HANCOCK, HENDERSON, HICKMAN, HOPKINS, LIVINGSTON, LYON, MARSHALL, MCCRACKEN, MCLEAN, MUHLENBERG, OHIO, UNION, and WEBSTER COUNTIES

	Rates	Fringes
BRICKLAYER		
Ballard, Caldwell, Carlisle, Crittenden, Fulton, Graves, Hickman, Livingston, Lyon, Marshall, and McCracken Counties	$ 29.52	13.37
Butler, Edmonson, Hopkins, Muhlenberg, and Ohio Counties	$ 24.61	10.22

Daviess, Hancock,
Henderson, McLean, Union,
and Webster Counties.....$ 28.68 13.72

BRTN0004-005 06/01/2014

ALLEN, CALLOWAY, CHRISTIAN, LOGAN, SIMPSON, TODD, TRIGG, and WARREN COUNTIES

	Rates	Fringes
BRICKLAYER	$ 25.37	10.50

CARP0357-002 04/01/2014

	Rates	Fringes
CARPENTER	$ 27.50	14.92
Diver	$ 41.63	14.92
PILEDRIVERMAN	$ 27.75	14.92

ELEC0369-006 05/28/2014

BUTLER, EDMONSON, LOGAN, TODD & WARREN COUNTIES:

	Rates	Fringes
ELECTRICIAN	$ 29.88	14.78

ELEC0429-001 06/01/2014

ALLEN & SIMPSON COUNTIES:

	Rates	Fringes
ELECTRICIAN	$ 24.44	10.15 + 5%

ELEC0816-002 06/01/2014

BALLARD, CALDWELL, CALLOWAY, CARLISLE, CHRISTIAN, CRITTENDEN, FULTON (Except a 5 mile radius of City Hall in Fulton), GRAVES, HICKMAN, LIVINGSTON, LYON, MARSHALL, MCCRACKEN & TRIGG COUNTIES:

	Rates	Fringes
ELECTRICIAN	$ 30.82	25.5%+5.85

Cable spicers receive $.25 per hour additional.

ELEC1701-003 06/01/2013

DAVIESS, HANCOCK, HENDERSON, HOPKINS, MCLEAN, MUHLENBERG, OHIO, UNION & WEBSTER COUNTIES:

	Rates	Fringes
ELECTRICIAN	$ 30.03	13.72

Cable spicers receive $.25 per hour additional.

ELEC1925-002 06/01/2014

FULTON COUNTY (Up to a 5 mile radius of City Hall in Fulton):

	Rates	Fringes
CABLE SPLICER	$ 25.00	10.27
ELECTRICIAN	$ 24.80	11.01

ENGI0181-017 07/01/2014

	Rates	Fringes
POWER EQUIPMENT OPERATOR		
GROUP 1	$ 28.85	14.15
GROUP 2	$ 26.24	14.15
GROUP 3	$ 26.65	14.15
GROUP 4	$ 25.95	14.15

OPERATING ENGINEER CLASSIFICATIONS

GROUP 1 - A-Frame Winch Truck; Auto Patrol; Backfiller; Batcher Plant; Bituminous Paver; Bituminous Transfer Machine; Boom Cat; Bulldozer; Mechanic; Cableway; Carry-All Scoop; Carry Deck Crane; Central Compressor Plant; Cherry Picker; Clamshell; Concrete Mixer (21 cu. ft. or Over); Concrete Paver; Truck-Mounted Concrete Pump; Core Drill; Crane; Crusher Plant; Derrick; Derrick Boat; Ditching & Trenching Machine; Dragline; Dredge Operator; Dredge Engineer; Elevating Grader & Loaders; Grade-All; Gurries; Heavy Equipment Robotics Operator/Mechanic; High Lift; Hoe-Type Machine; Hoist (Two or More Drums); Hoisting Engine (Two or More Drums); Horizontal Directional Drill Operator; Hydrocrane; Hyster; KeCal Loader; LeTourneau; Locomotive; Mechanic; Mechanically Operated Laser Screed; Mechanic Welder; Mucking Machine; Motor Scraper; Orangepeel Bucket; Overhead Crane; Piledriver; Power Blade; Pumpcrete; Push Dozer; Rock Spreader, attached to equipment; Rotary Drill; Roller (Bituminous); Rough Terrain Crane; Scarifier; Scoopmobile; Shovel; Side Boom; Subgrader; Tailboom; Telescoping Type Forklift; Tow or Push Boat; Tower Crane (French, German & other types); Tractor Shovel; Truck Crane; Tunnel Mining Machines, including Moles, Shields or similar types of Tunnel Mining Equipment

GROUP 2 - Air Compressor (Over 900 cu. ft. per min.); Bituminous Mixer; Boom Type Tamping Machine; Bull Float; Concrete Mixer (Under 21 cu. ft.); Dredge Engineer; Electric Vibrator; Compactor/Self-Propelled Compactor; Elevator (One Drum or Buck Hoist); Elevator (When used to Hoist Building Material); Finish Machine; Firemen & Hoist (One Drum); Flexplane; Forklift (Regardless of Lift Height); Form Grader; Joint Sealing Machine; Outboard Motor Boat; Power Sweeper (Riding Type); Roller (Rock); Ross Carrier; Skid Mounted or Trailer Mounted Conrete Pump; Skid Steer Machine with all Attachments; Switchman or Brakeman; Throttle Valve Person; Tractair & Road Widening Trencher;

Tractor (50 H.P. or Over); Truck Crane Oiler; Tugger; Welding Machine; Well Points;& Whirley Oiler

GROUP 3 -All Off Road Material Handling Equipment, including Articulating Dump Trucks; Greaser on Grease Facilities servicing Heavy Equipment

GROUP 4 - Bituminous Distributor; Burlap & Curing Machine; Cement Gun; Concrete Saw; Conveyor; Deckhand Oiler; Grout Pump; Hydraulic Post Driver; Hydro Seeder; Mud Jack; Oiler; Paving Joint Machine; Power Form Handling Equipment; Pump; Roller (Earth); Steerman; Tamping Machine; Tractor (Under 50 H.P.); & Vibrator

CRANES - with booms 150 ft. & Over (Including JIB), and where the length of the boom in combination with the length of the piling equals or exceeds 150 ft. - $1.00 above Group 1 rate

EMPLOYEES ASSIGNED TO WORK BELOW GROUND LEVEL ARE TO BE PAID 10% ABOVE BASIC WAGE RATE. THIS DOES NOT APPLY TO OPEN CUT WORK.

IRON0070-005 06/01/2014

BUTLER COUNTY (Eastern eighth, including the Townships of Decker, Lee & Tilford);
EDMONSON COUNTY (Northern three-fourths, including the Townships of Asphalt, Bee Spring, Brownsville, Grassland, Huff, Kyrock, Lindseyville, Mammoth Cave, Ollie, Prosperity, Rhoda, Sunfish & Sweden)

	Rates	Fringes
IRONWORKER		
Structural; Ornamental; Reinforcing; Precast Concrete Erectors	$ 26.97	19.75

IRON0103-004 04/01/2013

DAVIESS, HANCOCK, HENDERSON, HOPKINS, MCLEAN, OHIO, UNION & WEBSTER COUNTIES
BUTLER COUNTY (Townships of Aberdeen, Bancock, Casey, Dexterville, Dunbar, Elfie, Gilstrap, Huntsville, Logansport, Monford, Morgantown, Provo, Rochester, South Hill & Welchs Creek);
CALDWELL COUNTY (Northeastern third, including the Township of Creswell);
CHRISTIAN COUNTY (Northern third, including the Townships of Apex, Crofton, Kelly, Mannington & Wynns);
CRITTENDEN COUNTY (Northeastern half, including the Townships of Grove, Mattoon, Repton, Shady Grove & Tribune);
MUHLENBERG COUNTY (Townships of Bavier, Beech Creek Junction, Benton, Brennen, Browder, Central City, Cleaton, Depoy, Drakesboro, Eunis, Graham, Hillside, Luzerne, Lynn City, Martwick, McNary, Millport, Moorman, Nelson, Paradise, Powderly, South Carrollton, Tarina & Weir)

	Rates	Fringes
Ironworkers:.....	$ 27.82	16.555

IRON0492-003 05/01/2013

ALLEN, LOGAN, SIMPSON, TODD & WARREN COUNTIES
BUTLER COUNTY (Southern third, including the Townships of Boston, Berrys Lick, Dimple, Jetson, Quality, Sharer, Sugar Grove & Woodbury);
CHRISTIAN COUNTY (Eastern two-thirds, including the Townships of Bennettstown, Casky, Herndon, Hopkinsville, Howell, Masonville, Pembroke & Thompsonville);
EDMONSON COUNTY (Southern fourth, including the Townships of Chalybeate & Rocky Hill);
MUHLENBERG COUNTY (Southern eighth, including the Townships of Dunnior, Penrod & Rosewood)

	Rates	Fringes
Ironworkers:.....	$ 23.84	10.96

IRON0782-006 05/01/2014

BALLARD, CALLOWAY, CARLISLE, FULTON, GRAVES, HICKMAN, LIVINGSTON, LYON, MARSHALL, MCCRACKEN & TRIGG COUNTIES
CALDWELL COUNTY (Southwestern two-thirds, including the Townships of Cedar Bluff, Cider, Claxton, Cobb, Crowtown, Dulaney, Farmersville, Fredonia, McGowan, Otter Pond & Princeton);
CHRISTIAN COUNTY (Western third, Excluding the Townships of Apex, Crofton, Kelly, Mannington, Wynns, Bennettstown, Casky, Herndon, Hopkinsville, Howell, Masonville, Pembroke & Thompsonville);
CRITTENDEN COUNTY (Southwestern half, including the Townships of Crayne, Dycusburg, Frances, Marion, Mexico, Midway, Sheridan & Told)

	Rates	Fringes
Ironworkers:		
Projects with a total contract cost of $20,000,000.00 or above.....	$ 27.09	20.66
All Other Work.....	$ 25.50	19.02

LABO0189-005 07/01/2014

BALLARD, CALLOWAY, CARLISLE, FULTON, GRAVES, HICKMAN, LIVINGSTON, LYON, MARSHALL & MCCRACKEN COUNTIES

	Rates	Fringes
Laborers:		
GROUP 1.....	$ 21.50	12.26

GROUP 2.....$ 21.75 12.26
GROUP 3.....$ 21.80 12.26
GROUP 4.....$ 22.40 12.26

LABORER CLASSIFICATIONS

GROUP 1 - Aging & Curing of Concrete; Asbestos Abatement Worker; Asphalt Plant; Asphalt; Batch Truck Dump; Carpenter Tender; Cement Mason Tender; Cleaning of Machines; Concrete; Demolition; Dredging; Environmental - Nuclear, Radiation, Toxic & Hazardous Waste - Level D; Flagperson; Grade Checker; Hand Digging & Hand Back Filling; Highway Marker Placer; Landscaping, Mesh Handler & Placer; Puddler; Railroad; Rip-rap & Grouter; Right-of-Way; Sign, Guard Rail & Fence Installer; Signal Person; Sound Barrier Installer; Storm & Sanitary Sewer; Swamper; Truck Spotter & Dumper; Wrecking of Concrete Forms; General Cleanup

GROUP 2 - Batter Board Man (Sanitary & Storm Sewer); Brickmason Tender; Mortar Mixer Operator; Scaffold Builder; Burner & Welder; Bushammer; Chain Saw Operator; Concrete Saw Operator; Deckhand Scow Man; Dry Cement Handler; Environmental - Nuclear, Radiation, Toxic & Hazardous Waste - Level C; Forklift Operator for Masonary; Form Setter; Green Concrete Cutting; Hand Operated Grouter & Grinder Machine Operator; Jackhammer; Pavement Breaker; Paving Joint Machine; Pipelayer; Plastic Pipe Fusion; Power Driven Georgia Buggy & Wheel Barrow; Power Post Hole Digger; Precast Manhole Setter; Walk-Behind Tamper; Walk-Behind Trencher; Sand Blaster; Concrete Chipper; Surface Grinder; Vibrator Operator; Wagon Driller

GROUP 3 - Asphalt Luteman & Raker; Gunnite Nozzleman; Gunnite Operator & Mixer; Grout Pump Operator; Blaster; Side Rail Setter; Rail Paved Ditches; Screw Operator; Tunnel (Free Air); Water Blaster

GROUP 4 - Caisson Worker (Free Air); Cement Finisher; Environmental - Nuclear, Radiation, Toxic & Hazardous Waste - Levels A & B; Miner & Driller (Free Air); Tunnel Blaster; & Tunnel Mucker (Free Air); Directional & Horizontal Boring; Air Track Drillers (All Types); Powdermen & Blasters; Troxler & Concrete Tester if Laborer is Utilized

---

LABO0189-006 07/01/2014

ALLEN, BUTLER, CALDWELL, CHRISTIAN, DAVIESS, EDMONSON, HANCOCK, HOPKINS, LOGAN, MCLEAN, MUHLENBERG, OHIO, SIMPSON, TODD, TRIGG & WARREN COUNTIES

	Rates	Fringes
Laborers:		
GROUP 1	$ 22.66	11.10
GROUP 2	$ 22.91	11.10
GROUP 3	$ 22.96	11.10
GROUP 4	$ 23.56	11.10

LABORER CLASSIFICATIONS

GROUP 1 - Aging & Curing of Concrete; Asbestos Abatement Worker; Asphalt Plant; Asphalt; Batch Truck Dump; Carpenter Tender; Cement Mason Tender; Cleaning of Machines; Concrete; Demolition; Dredging; Environmental - Nuclear, Radiation, Toxic & Hazardous Waste - Level D; Flagperson; Grade Checker; Hand Digging & Hand Back Filling; Highway Marker Placer; Landscaping, Mesh Handler & Placer; Puddler; Railroad; Rip-rap & Grouter; Right-of-Way; Sign, Guard Rail & Fence Installer; Signal Person; Sound Barrier Installer; Storm & Sanitary Sewer; Swamper; Truck Spotter & Dumper; Wrecking of Concrete Forms; General Cleanup

GROUP 2 - Batter Board Man (Sanitary & Storm Sewer); Brickmason Tender; Mortar Mixer Operator; Scaffold Builder; Burner & Welder; Bushammer; Chain Saw Operator; Concrete Saw Operator; Deckhand Scow Man; Dry Cement Handler; Environmental - Nuclear, Radiation, Toxic & Hazardous Waste - Level C; Forklift Operator for Masonary; Form Setter; Green Concrete Cutting; Hand Operated Grouter & Grinder Machine Operator; Jackhammer; Pavement Breaker; Paving Joint Machine; Pipelayer; Plastic Pipe Fusion; Power Driven Georgia Buggy & Wheel Barrow; Power Post Hole Digger; Precast Manhole Setter; Walk-Behind Tamper; Walk-Behind Trencher; Sand Blaster; Concrete Chipper; Surface Grinder; Vibrator Operator; Wagon Driller

GROUP 3 - Asphalt Luteman & Raker; Gunnite Nozzleman; Gunnite Operator & Mixer; Grout Pump Operator; Blaster; Side Rail Setter; Rail Paved Ditches; Screw Operator; Tunnel (Free Air); Water Blaster

GROUP 4 - Caisson Worker (Free Air); Cement Finisher; Environmental - Nuclear, Radiation, Toxic & Hazardous Waste - Levels A & B; Miner & Driller (Free Air); Tunnel Blaster; & Tunnel Mucker (Free Air); Directional & Horizontal Boring; Air Track Drillers (All Types); Powdermen & Blasters; Troxler & Concrete Tester if Laborer is Utilized

---

LABO0561-001 07/01/2014

CRITTENDEN, HENDERSON, UNION & WEBSTER COUNTIES

	Rates	Fringes
Laborers:		
GROUP 1	$ 21.36	12.65
GROUP 2	$ 21.61	12.65
GROUP 3	$ 21.66	12.65
GROUP 4	$ 22.26	12.65

LABORER CLASSIFICATIONS

GROUP 1 - Aging & Curing of Concrete; Asbestos Abatement Worker; Asphalt Plant; Asphalt; Batch Truck Dump; Carpenter Tender; Cement Mason Tender; Cleaning of Machines; Concrete; Demolition; Dredging; Environmental - Nuclear, Radiation, Toxic & Hazardous Waste - Level D; Flagperson;

Grade Checker; Hand Digging & Hand Back Filling; Highway Marker Placer; Landscaping, Mesh Handler & Placer; Puddler; Railroad; Rip-rap & Grouter; Right-of-Way; Sign, Guard Rail & Fence Installer; Signal Person; Sound Barrier Installer; Storm & Sanitary Sewer; Swamper; Truck Spotter & Dumper; Wrecking of Concrete Forms; General Cleanup

GROUP 2 - Batter Board Man (Sanitary & Storm Sewer); Brickmason Tender; Mortar Mixer Operator; Scaffold Builder; Burner & Welder; Bushammer; Chain Saw Operator; Concrete Saw Operator; Deckhand Scow Man; Dry Cement Handler; Environmental - Nuclear, Radiation, Toxic & Hazardous Waste - Level C; Forklift Operator for Masonary; Form Setter; Green Concrete Cutting; Hand Operated Grouter & Grinder Machine Operator; Jackhammer; Pavement Breaker; Paving Joint Machine; Pipelayer; Plastic Pipe Fusion; Power Driven Georgia Buggy & Wheel Barrow; Power Post Hole Digger; Precast Manhole Setter; Walk-Behind Tamper; Walk-Behind Trencher; Sand Blaster; Concrete Chipper; Surface Grinder; Vibrator Operator; Wagon Driller

GROUP 3 - Asphalt Luteman & Raker; Gunnite Nozzleman; Gunnite Operator & Mixer; Grout Pump Operator; Blaster; Side Rail Setter; Rail Paved Ditches; Screw Operator; Tunnel (Free Air); Water Blaster

GROUP 4 - Caisson Worker (Free Air); Cement Finisher; Environmental - Nuclear, Radiation, Toxic & Hazardous Waste - Levels A & B; Miner & Driller (Free Air); Tunnel Blaster; & Tunnel Mucker (Free Air); Directional & Horizontal Boring; Air Track Drillers (All Types); Powdermen & Blasters; Troxler & Concrete Tester if Laborer is Utilized

---

PAIN0032-002 05/01/2013

BALLARD COUNTY

	Rates	Fringes
Painters:		
Bridges	$ 30.56	15.18
All Other Work	$ 28.26	15.18

Spray, Blast, Steam, High & Hazardous (Including Lead Abatement) and All Epoxy - $1.00 Premium

---

* PAIN0118-003 06/01/2014

EDMONSON COUNTY:

	Rates	Fringes
Painters:		
Brush & Roller	$ 18.50	11.97
Spray, Sandblast, Power Tools, Waterblast & Steam Cleaning	$ 19.50	11.97

---

* PAIN0156-006 04/01/2014

DAVIESS, HANCOCK, HENDERSON, MCLEAN, OHIO, UNION & WEBSTER COUNTIES

	Rates	Fringes
Painters:		
BRIDGES		
GROUP 1	$ 27.20	12.35
GROUP 2	$ 27.45	12.35
GROUP 3	$ 28.20	12.35
GROUP 4	$ 29.20	12.35
ALL OTHER WORK:		
GROUP 1	$ 26.05	12.35
GROUP 2	$ 26.30	12.35
GROUP 3	$ 27.05	12.35
GROUP 4	$ 28.05	12.35

PAINTER CLASSIFICATIONS

GROUP 1 - Brush & Roller

GROUP 2 - Plasterers

GROUP 3 - Spray; Sandblast; Power Tools; Waterblast; Steamcleaning; Brush & Roller of Mastics, Creosotes, Kwinch Koate & Coal Tar Epoxy

GROUP 4 - Spray of Mastics, Creosotes, Kwinch Koate & Coal Tar Epoxy

---

PAIN0456-003 07/01/2011

ALLEN, BUTLER, LOGAN, MUHLENBERG, SIMPSON, TODD & WARREN COUNTIES:

	Rates	Fringes
Painters:		
BRIDGES		
Brush & Roller	$ 22.55	9.65
Spray; Sandblast; Power Tools; Waterblast & Steam Cleaning	$ 23.55	9.65
ALL OTHER WORK		
Brush & Roller	$ 17.55	9.65
Spray; Sandblast; Power Tools; Waterblast & Steam Cleaning	$ 18.55	9.65

ALL OTHER WORK - HIGH TIME PAY
Over 35 feet (up to 100 feet) - $1.00 above base wage
100 feet and over - $2.00 above base wage

DURING SPRAY PAINTING AND SANDBLASTING OPERATIONS, POT TENDERS SHALL RECEIVE THE SAME WAGE RATES AS THE SPRAY

PAINTER OR NOZZLE OPERATOR

---

* PAIN0500-002 06/01/2014

CALDWELL, CALLOWAY, CARLISLE, CHRISTIAN, CRITTENDEN, FULTON, GRAVES, HICKMAN, HOPKINS, LIVINGSTON, LYON, MARSHALL, MCCRACKEN & TRIGG COUNTIES:

	Rates	Fringes
Painters:		
Bridges	$ 26.55	11.85
All Other Work	$ 20.30	11.85

Waterblasting units with 3500 PSI and above - $.50 premium
Spraypainting and all abrasive blasting - $1.00 premium
Work 40 ft. and above ground level - $1.00 premium

PLUM0184-002 07/01/2013

BALLARD, CALDWELL, CALLOWAY, CARLISLE, CHRISTIAN, CRITTENDEN, FULTON, GRAVES, HICKMAN, LIVINGSTON, LYON, MARSHALL, MCCRACKEN and TRIGG COUNTIES

	Rates	Fringes
Plumber; Steamfitter	$ 33.11	14.83

PLUM0502-004 08/01/2013

ALLEN, BUTLER, EDMONSON, SIMPSON & WARREN

	Rates	Fringes
Plumber; Steamfitter	$ 32.00	17.17

PLUM0633-002 08/01/2013

DAVIESS, HANCOCK, HENDERSON, HOPKINS, LOGAN, MCLEAN, MUHLENBERG, OHIO, TODD, UNION & WEBSTER COUNTIES:

	Rates	Fringes
PLUMBER/PIPEFITTER	$ 29.87	14.25

TEAM0089-003 03/30/2014

ALLEN, BUTLER, EDMONSON, LOGAN, SIMPSON & WARREN COUNTIES

	Rates	Fringes
Truck drivers:		
Zone 1:		
Group 1	$ 19.58	17.83
Group 2	$ 19.76	17.83

Group 3.....$ 19.84 17.83
Group 4.....$ 19.86 17.83

GROUP 1 - Greaser; Tire Changer

GROUP 2 - Truck Mechanic; Single Axle Dump; Flat Bed; All Terrain Vehicles when used to haul materials; Semi Trailer or Pole Trailer when used to pull building materials and equipment; Tandem Axle Dump; Driver of Distributors

GROUP 3 - Mixer All Types

GROUP 4 - Winch and A-Frame when used in transporting materials; Ross Carrier; Fork Lift when used to transport building materials; Driver on Pavement Breaker; Euclid and Other Heavy Earth Moving Equipment; Low Boy; Articulator Cat; Five Axle Vehicle

---

TEAM0215-003 03/31/2013

DAVIESS, HANCOCK, HENDERSON, HOPKINS, MCLEAN, MUHLENBERG, OHIO & WEBSTER COUNTIES

	Rates	Fringes
TRUCK DRIVER		
Group 1	$ 20.93	16.85
Group 2	$ 21.16	16.85
Group 3	$ 21.23	16.85
Group 4	$ 21.24	16.85

GROUP 1: Greaser, Tire Changer

GROUP 2: Truck Mechanic

GROUP 3: Single Axle Dump; Flat Bed; All Terrain Vehicle when used to haul materials; Semi Trailer or Pole Trailer when used to pull building materials and equipment; Tandem Axle Dump; Driver of Distributors; Mixer All Types

GROUP 4: Euclid and other heavy earth moving equipment; Low Boy; Articulator Cat; 5 Axle Vehicle; Winch and A- Frame when used in transporting materials; Ross Carrier; Fork Lift when used to transport building materials; Driver on Pavement Breaker

---

TEAM0236-001 03/31/2013

BALLARD, CALDWELL, CALLOWAY, CARLISLE, CHRISTIAN, CRITTENDEN, FULTON, GRAVES, HICKMAN, LIVINGSTON, LYON, MARSHALL, MCCRACKEN,TODD & TRIGG COUNTIES

	Rates	Fringes
TRUCK DRIVER		
Group 1	$ 19.38	16.85

Group 2.....$ 19.56 16.85
Group 3.....$ 19.56 16.85
Group 4.....$ 19.66 16.85
Group 5.....$ 19.64 16.85

GROUP 1: Greaser, Tire Changer

GROUP 2: Truck Mechanic

GROUP 3: Single Axle Dump; Flat Bed; All Terrain Vehicle when used to haul materials; Semi Trailer or Pole Trailer when used to pull building materials and equipment; Tandem Axle Dump; Drivers of Distributors

GROUP 4: Euclid and other heavy earth moving equipment; Low Boy; Articulator Cat; Five Axle Vehicle; Winch and A-Frame when used in transporting materials; Ross Carrier

GROUP 5: Mixer All Types

WELDERS - Receive rate prescribed for craft performing operation to which welding is incidental.

==========

Unlisted classifications needed for work not included within the scope of the classifications listed may be added after award only as provided in the labor standards contract clauses (29CFR 5.5 (a) (1) (ii)).

The body of each wage determination lists the classification and wage rates that have been found to be prevailing for the cited type(s) of construction in the area covered by the wage determination. The classifications are listed in alphabetical order of "identifiers" that indicate whether the particular rate is a union rate (current union negotiated rate for local), a survey rate (weighted average rate) or a union average rate (weighted union average rate).

Union Rate Identifiers

A four letter classification abbreviation identifier enclosed in dotted lines beginning with characters other than "SU" or "UAVG" denotes that the union classification and rate were prevailing for that classification in the survey. Example: PLUM0198-005 07/01/2014. PLUM is an abbreviation identifier of the union which prevailed in the survey for this classification, which in this example would be Plumbers. 0198 indicates the local union number or district council number where applicable, i.e., Plumbers Local 0198. The next number, 005 in the example, is an internal number used in processing the wage determination. 07/01/2014 is the effective date of the most current negotiated rate, which in this example is July 1,

2014.

Union prevailing wage rates are updated to reflect all rate changes in the collective bargaining agreement (CBA) governing this classification and rate.

Survey Rate Identifiers

Classifications listed under the "SU" identifier indicate that no one rate prevailed for this classification in the survey and the published rate is derived by computing a weighted average rate based on all the rates reported in the survey for that classification. As this weighted average rate includes all rates reported in the survey, it may include both union and non-union rates. Example: SULA2012-007 5/13/2014. SU indicates the rates are survey rates based on a weighted average calculation of rates and are not majority rates. LA indicates the State of Louisiana. 2012 is the year of survey on which these classifications and rates are based. The next number, 007 in the example, is an internal number used in producing the wage determination. 5/13/2014 indicates the survey completion date for the classifications and rates under that identifier.

Survey wage rates are not updated and remain in effect until a new survey is conducted.

Union Average Rate Identifiers

Classification(s) listed under the UAVG identifier indicate that no single majority rate prevailed for those classifications; however, 100% of the data reported for the classifications was union data. EXAMPLE: UAVG-OH-0010 08/29/2014. UAVG indicates that the rate is a weighted union average rate. OH indicates the state. The next number, 0010 in the example, is an internal number used in producing the wage determination. 08/29/2014 indicates the survey completion date for the classifications and rates under that identifier.

A UAVG rate will be updated once a year, usually in January of each year, to reflect a weighted average of the current negotiated/CBA rate of the union locals from which the rate is based.

WAGE DETERMINATION APPEALS PROCESS

1.) Has there been an initial decision in the matter? This can be:

* an existing published wage determination
* a survey underlying a wage determination
* a Wage and Hour Division letter setting forth a position on a wage determination matter
* a conformance (additional classification and rate) ruling

On survey related matters, initial contact, including requests for summaries of surveys, should be with the Wage and Hour

Regional Office for the area in which the survey was conducted because those Regional Offices have responsibility for the Davis-Bacon survey program. If the response from this initial contact is not satisfactory, then the process described in 2.) and 3.) should be followed.

With regard to any other matter not yet ripe for the formal process described here, initial contact should be with the Branch of Construction Wage Determinations. Write to:

Branch of Construction Wage Determinations
Wage and Hour Division
U.S. Department of Labor
200 Constitution Avenue, N.W.
Washington, DC 20210

2.) If the answer to the question in 1.) is yes, then an interested party (those affected by the action) can request review and reconsideration from the Wage and Hour Administrator (See 29 CFR Part 1.8 and 29 CFR Part 7). Write to:

Wage and Hour Administrator
U.S. Department of Labor
200 Constitution Avenue, N.W.
Washington, DC 20210

The request should be accompanied by a full statement of the interested party's position and by any information (wage payment data, project description, area practice material, etc.) that the requestor considers relevant to the issue.

3.) If the decision of the Administrator is not favorable, an interested party may appeal directly to the Administrative Review Board (formerly the Wage Appeals Board). Write to:

Administrative Review Board
U.S. Department of Labor
200 Constitution Avenue, N.W.
Washington, DC 20210

4.) All decisions by the Administrative Review Board are final.

==========

END OF GENERAL DECISION

Fringe benefit amounts are applicable for all hours worked except when otherwise noted.

These rates are listed pursuant to the Kentucky Determination No. CR-14-I-HWY dated July 14, 2014.

No laborer, workman or mechanic shall be paid at a rate less than that of a Journeyman except those classified as bona fide apprentices.

Apprentices or trainees shall be permitted to work as such subject to Administrative Regulations adopted by the Commissioner of Workplace Standards. Copies of these regulations will be furnished upon request from any interested person.

Before using apprentices on the job the contractor shall present to the Contracting Officer written evidence of registration of such employees in a program of a State apprenticeship and training agency approved and recognized by the U. S. Bureau of Apprenticeship and Training. In the absence of such a State agency, the contractor shall submit evidence of approval and registration by the U. S. Bureau of Apprenticeship and Training.

The contractor shall submit to the Contracting Officer, written evidence of the established apprenticeship-journeyman ratios and wage rates in the project area, which will be the basis for establishing such ratios and rates for the project under the applicable contract provisions.

TO: EMPLOYERS/EMPLOYEES

PREVAILING WAGE SCHEDULE:

The wages indicated on this wage schedule are the least permitted to be paid for the occupations indicated. When an employee works in more than one classification, the employer must record the number of hours worked in each classification at the prescribed hourly base rate.

OVERTIME:

Overtime is to be paid after an employee works eight (8) hours a day or forty (40) hours a week, whichever gives the employee the greater wages. At least time and one-half the base rate is required for all overtime. A laborer, workman or mechanic and an employer may enter into a written agreement or a collective bargaining agreement to work more than eight (8) hours a calendar day but not more than ten (10) hours a calendar day for the straight time hourly rate. Wage violations or questions should be directed to the designated Engineer or the undersigned.

Diana Castle Radcliffe, P.E.
Director, Division of Construction Procurement
Frankfort, Kentucky 40622

PART IV

INSURANCE

INSURANCE

The Contractor shall procure and maintain the following insurance in addition to the insurance required by law:

1) Commercial General Liability-Occurrence form – not less than $2,000,000 General aggregate, $2,000,000 Products & Completed Aggregate, $1,000,000 Personal & Advertising, $1,000,000 each occurrence.

2) Automobile Liability- $1,000,000 per accident

3) Employers Liability:

   a) $100,000 Each Accident Bodily Injury
   b) $500,000 Policy limit Bodily Injury by Disease
   c) $100,000 Each Employee Bodily Injury by Disease

4) The insurance required above must be evidenced by a Certificate of Insurance and this Certificate of Insurance must contain one of the following statements:
   a) "policy contains no deductible clauses."
   b) "policy contains _____ (amount) deductible property damage clause but company will pay claim and collect the deductible from the insured."

5) KENTUCKY WORKMEN'S COMPENSATION INSURANCE. The contractor shall furnish evidence of coverage of all his employees or give evidence of self-insurance by submitting a copy of a certificate issued by the Workmen's Compensation Board.

The cost of insurance is incidental to all contract items. All subcontractors must meet the same minimum insurance requirements.

PART V

BID ITEMS

151005

PROPOSAL BID ITEMS

Report Date 1/26/15

Section: 0001 - PAVING

LINE	BID CODE	ALT	DESCRIPTION	QUANTITY	UNIT	UNIT PRIC	FP	AMOUNT
0010	00001		DGA BASE	500.00	TON		$	
0020	00100		ASPHALT SEAL AGGREGATE	264.00	TON		$	
0030	00103		ASPHALT SEAL COAT	32.00	TON		$	
0040	00194		LEVELING & WEDGING PG76-22	370.00	TON		$	
0050	00212		CL2 ASPH BASE 1.00D PG64-22	1,454.00	TON		$	
0060	00216		CL3 ASPH BASE 1.00D PG76-22	1,585.00	TON		$	
0070	00309		CL2 ASPH SURF 0.50D PG64-22	5,455.00	TON		$	
0080	00332		CL3 ASPH SURF 0.50A PG76-22	16,369.00	TON		$	
0090	02677		ASPHALT PAVE MILLING & TEXTURING	23,709.00	TON		$	

Section: 0002 - ROADWAY

LINE	BID CODE	ALT	DESCRIPTION	QUANTITY	UNIT	UNIT PRIC	FP	AMOUNT
0100	00078		CRUSHED AGGREGATE SIZE NO 2	452.00	TON		$	
0110	01000		PERFORATED PIPE-4 IN	29,750.00	LF		$	
0120	01010		NON-PERFORATED PIPE-4 IN	3,500.00	LF		$	
0130	01015		INSPECT & CERTIFY EDGE DRAIN SYSTEM	1.00	LS		$	
0140	01020		PERF PIPE HEADWALL TY 1-4 IN	20.00	EACH		$	
0150	01024		PERF PIPE HEADWALL TY 2-4 IN	20.00	EACH		$	
0160	01028		PERF PIPE HEADWALL TY 3-4 IN	20.00	EACH		$	
0170	01032		PERF PIPE HEADWALL TY 4-4 IN	20.00	EACH		$	
0180	01897		ASPHALT WEDGE CURB	325.00	LF		$	
0190	01982		DELINEATOR FOR GUARDRAIL MONO DIRECTIONAL WHITE	3.00	EACH		$	
0200	02003		RELOCATE TEMP CONC BARRIER	1,120.00	LF		$	
0210	02165		REMOVE PAVED DITCH	36.00	SQYD		$	
0220	02220		FLOWABLE FILL	6.00	CUYD		$	
0230	02360		GUARDRAIL TERMINAL SECTION NO 1	1.00	EACH		$	
0240	02369		GUARDRAIL END TREATMENT TYPE 2A	1.00	EACH		$	
0250	02381		REMOVE GUARDRAIL	137.50	LF		$	
0260	02383		REMOVE & RESET GUARDRAIL	675.00	LF		$	
0270	02387		GUARDRAIL CONNECTOR TO BRIDGE END TY A-1	1.00	EACH		$	
0280	02391		GUARDRAIL END TREATMENT TYPE 4A	1.00	EACH		$	
0290	02482		CHANNEL LINING CLASS IA	18.00	TON		$	
0300	02483		CHANNEL LINING CLASS II	2,800.00	TON		$	
0310	02484		CHANNEL LINING CLASS III	1,400.00	TON		$	
0320	02562		TEMPORARY SIGNS	660.00	SQFT		$	
0330	02575		DITCHING AND SHOULDERING	29,753.00	LF		$	
0340	02599		FABRIC-GEOTEXTILE TYPE IV	200.00	SQYD		$	
0350	02650		MAINTAIN & CONTROL TRAFFIC	1.00	LS		$	
0360	02671		PORTABLE CHANGEABLE MESSAGE SIGN	4.00	EACH		$	
0370	02676		MOBILIZATION FOR MILL & TEXT	1.00	LS		$	
0380	02696		SHOULDER RUMBLE STRIPS-SAWED	128,978.00	LF		$	
0390	02726		STAKING	1.00	LS		$	
0400	02775		ARROW PANEL	4.00	EACH		$	
0410	02898		RELOCATE CRASH CUSHION	2.00	EACH		$	

151005

PROPOSAL BID ITEMS

Report Date 1/26/15

LINE	BID CODE	ALT	DESCRIPTION	QUANTITY	UNIT	UNIT PRIC	FP	AMOUNT
0420	03171		CONCRETE BARRIER WALL TYPE 9T	1,120.00	LF		$	
0430	03266		CLEANING AND SWEEPING	2.00	MILE		$	
0440	04793		CONDUIT-1 1/4 IN	120.00	LF		$	
0450	04795		CONDUIT-2 IN	40.00	LF		$	
0460	04811		ELECTRICAL JUNCTION BOX TYPE B	2.00	EACH		$	
0470	04820		TRENCHING AND BACKFILLING	160.00	LF		$	
0480	04829		PIEZOELECTRIC SENSOR	8.00	EACH		$	
0490	04830		LOOP WIRE	2,700.00	LF		$	
0500	04895		LOOP SAW SLOT AND FILL	400.00	LF		$	
0510	06401		FLEXIBLE DELINEATOR POST-M/W	968.00	EACH		$	
0520	06404		FLEXIBLE DELINEATOR POST-M/Y	76.00	EACH		$	
0530	06412		STEEL POST MILE MARKERS	10.00	EACH		$	
0540	06511		PAVE STRIPING-TEMP PAINT-6 IN	59,506.00	LF		$	
0550	06550		PAVE STRIPING-TEMP REM TAPE-W	2,200.00	LF		$	
0560	06551		PAVE STRIPING-TEMP REM TAPE-Y	2,200.00	LF		$	
0570	06592		PAVEMENT MARKER TYPE V-B W/R	780.00	EACH		$	
0580	06593		PAVEMENT MARKER TYPE V-B Y/R	124.00	EACH		$	
0590	08903		CRASH CUSHION TY VI CLASS BT TL3	2.00	EACH		$	
0600	10020NS		FUEL ADJUSTMENT	41,358.00	DOLL	$1.00	$	$41,358.00
0610	10030NS		ASPHALT ADJUSTMENT	103,878.00	DOLL	$1.00	$	$103,878.00
0620	20071EC		JOINT ADHESIVE	123,995.00	LF		$	
0630	20391NS835		ELECTRICAL JUNCTION BOX TYPE A	3.00	EACH		$	
0640	20411ED		LAW ENFORCEMENT OFFICER	300.00	HOUR		$	
0650	20587ES601		CONCRETE CLASS B	8.00	SQYD		$	
0660	21543EN		BORE AND JACK CONDUIT	85.00	LF		$	
0670	21802EN		G/R STEEL W BEAM-S FACE (7 FT POST)	137.50	LF		$	
0680	22664EN		WATER BLASTING EXISTING STRIPE	800.00	LF		$	
0690	23143ED		KPDES PERMIT AND TEMP EROSION CONTROL	1.00	LS		$	
0700	24189ER		DURABLE WATERBORNE MARKING-6 IN W	79,366.00	LF		$	
0710	24190ER		DURABLE WATERBORNE MARKING-6 IN Y	63,311.00	LF		$	
0720	24191ER		DURABLE WATERBORNE MARKING-12 IN W	956.00	LF		$	

Section: 0003 - BRIDGE

LINE	BID CODE	ALT	DESCRIPTION	QUANTITY	UNIT	UNIT PRIC	FP	AMOUNT
0730	03299		ARMORED EDGE FOR CONCRETE	175.00	LF		$	
0740	08151		STEEL REINFORCEMENT-EPOXY COATED	542.00	LB		$	
0750	08470		EXPANSION DAM-2 IN NEOPRENE	175.00	LF		$	
0760	08504		EPOXY SAND SLURRY	243.00	SQYD		$	
0770	08526		CONC CLASS M FULL DEPTH PATCH	8.00	CUYD		$	
0780	08534		CONCRETE OVERLAY-LATEX	89.00	CUYD		$	
0790	08549		BLAST CLEANING	2,267.00	SQYD		$	
0800	08551		MACHINE PREP OF SLAB	2,160.00	SQYD		$	
0810	24094EC		PARTIAL DEPTH PATCHING	19.00	CUYD		$	

Section: 0004 - DEMOBILIZATION & OR MOBILIZATION

151005

PROPOSAL BID ITEMS

Report Date 1/26/15

LINE	BID CODE	ALT	DESCRIPTION	QUANTITY	UNIT	UNIT PRIC	FP	AMOUNT
0820	02568		MOBILIZATION	1.00	LS		$	
0830	02569		DEMOBILIZATION	1.00	LS		$	