CALL NO. 202

CONTRACT ID. 154208

CASEY COUNTY

FED/STATE PROJECT NUMBER 023GR15T004-HSIP & FE01

DESCRIPTION LIBERTY-HUSTONVILLE RD (US 127)

WORK TYPE GUARDRAIL

PRIMARY COMPLETION DATE 8/21/2015

LETTING DATE: March 20,2015

Sealed Bids will be received electronically through the Bid Express bidding service until 10:00 AM EASTERN DAYLIGHT TIME March 20,2015. Bids will be publicly announced at 10:00 AM EASTERN DAYLIGHT TIME.

NO PLANS ASSOCIATED WITH THIS PROJECT.

DBE CERTIFICATION REQUIRED - 0%

REQUIRED BID PROPOSAL GUARANTY: Not less than 5% of the total bid.

TABLE OF CONTENTS

PART I SCOPE OF WORK

- PROJECT(S), COMPLETION DATE(S), & LIQUIDATED DAMAGES
- CONTRACT NOTES
- FEDERAL CONTRACT NOTES
- NATIONAL HIGHWAY
- DGA BASE
- SPECIAL NOTE(S) APPLICABLE TO PROJECT
- WASTE AND BORROW SITES
- COORDINATION OF WORK WITH OTHER CONTRACTS
- DOUBLE ASPHALT SEAL COAT
- GUARDRAIL
- TYPICAL SECTION DIMENSIONS
- TRAFFIC CONTROL PLAN
- RIGHT OF WAY NOTES
- UTILITY CLEARANCE
- SKETCH MAP(S)
- MATERIAL SUMMARY
- SUMMARY SHEET(S)
- TYPICAL SECTION(S)
- DETAIL SHEET(S)
- GUARDRAIL DELIVERY VERIFICATION SHEET

PART II SPECIFICATIONS AND STANDARD DRAWINGS

- SPECIFICATIONS REFERENCE
- SUPPLEMENTAL SPECIFICATION
- STANDARD DRAWINGS THAT APPLY ENTIRE LIST 2012
- DELINEATORS FOR GUARDRAIL
- GUARDRAIL COMPONENTS
- STEEL BEAM GUARDRAIL ("W" BEAM)
- GUARDRAIL POSTS
- LANE CLOSURE TWO-LANE HIGHWAY
- GUARDRAIL END TREATMENT TYPE 7 ALTERNATE ANCHOR
- GUARDRAIL END TREATMENT TYPE 7

PART III EMPLOYMENT, WAGE AND RECORD REQUIREMENTS

- FEDERAL-AID CONSTRUCTION CONTRACTS - FHWA 1273
- NONDISCRIMINATION OF EMPLOYEES
- EXECUTIVE BRANCH CODE OF ETHICS
- PROJECT WAGE RATES LOCALITY 2 / FEDERAL (OVER)
- NOTICE OF REQUIREMENT FOR AFFIRMATIVE ACTION TO ENSURE EEO CASEY

PART IV INSURANCE

PART V BID ITEMS

PART I

SCOPE OF WORK

ADMINISTRATIVE DISTRICT - 08

CONTRACT ID - 154208

023GR15T004-HSIP & FE01

COUNTY - CASEY

PCN - 0802301271502
HSIP 1271 (114)

LIBERTY-HUSTONVILLE RD (US 127) (MP 18.946) FROM KY 1552 EXTENDING NORTH TO THE CASEY/LINCOLN COUNTY LINE (MP 23.715), A DISTANCE OF 04.77 MILES.GUARDRAIL SYP NO. 08-00933.00.

GEOGRAPHIC COORDINATES LATITUDE 37:23:41.02 LONGITUDE 84:51:52.25

PCN - 0802301271504
FE01 023 0127 018-024

LIBERTY-HUSTONVILLE RD (US 127) (MP 18.946) FROM KY 1552 EXTENDING NORTH TO THE CASEY/LINCOLN COUNTY LINE (MP 23.715), A DISTANCE OF 04.77 MILES.GUARDRAIL

GEOGRAPHIC COORDINATES LATITUDE 37:23:41.02 LONGITUDE 84:51:52.25

COMPLETION DATE(S):

COMPLETED BY 08/21/2015 APPLIES TO ENTIRE CONTRACT

CONTRACT NOTES

PROPOSAL ADDENDA

All addenda to this proposal must be applied when calculating bid and certified in the bid packet submitted to the Kentucky Department of Highways. Failure to use the correct and most recent addenda may result in the bid being rejected.

BID SUBMITTAL

Bidder must use the Department's Expedite Bidding Program available on the Internet web site of the Department of Highways, Division of Construction Procurement. (www.transportation.ky.gov/construction-procurement)

The Bidder must download the bid file located on the Bid Express website (www.bidx.com) to prepare a bid packet for submission to the Department. The bidder must submit electronically using Bid Express.

JOINT VENTURE BIDDING

Joint venture bidding is permissible. All companies in the joint venture must be prequalified in one of the work types in the Qualifications for Bidders for the project. The bidders must get a vendor ID for the joint venture from the Division of Construction Procurement and register the joint venture as a bidder on the project. Also, the joint venture must obtain a digital ID from Bid Express to submit a bid. A joint bid bond of 5% may be submitted for both companies or each company may submit a separate bond of 5%.

UNDERGROUND FACILITY DAMAGE PROTECTION

The contractor is advised that the Underground Facility Damage Protection Act of 1994, became law January 1, 1995. It is the contractor's responsibility to determine the impact of the act regarding this project, and take all steps necessary to be in compliance with the provision of the act.

SPECIAL NOTE FOR PIPE INSPECTION

Contrary to Section 701.03.08 of the 2012 Standard Specifications for Road and Bridge Construction and Kentucky Method 64-114, certification by the Kentucky Transportation Center for prequalified Contractors to perform laser/video inspection is not required on this contract. It will continue to be a requirement for the Contractor performing any laser/video pipe inspection to be prequalified for this specialized item with the Kentucky Transportation Cabinet-Division of Construction Procurement.

SPECIAL NOTE FOR COMPOSITE OFFSET BLOCKS

Contrary to the Standard Drawings (2012 edition) the Cabinet will allow 6" composite offset blocks in lieu of wooden offset blocks, except as specified on proprietary end treatments and crash cushions. The composite blocks shall be selected from the Cabinet's List of Approved Materials.

REGISTRATION WITH THE SECRETARY OF STATE BY A FOREIGN ENTITY

Pursuant to KRS 176.085(1)(b), an agency, department, office, or political subdivision of the Commonwealth of Kentucky shall not award a state contract to a person that is a foreign entity required by KRS 14A.9-010 to obtain a certificate of authority to transact business in the Commonwealth ("certificate") from the Secretary of State under KRS 14A.9-030 unless the person produces the certificate within fourteen (14) days of the bid or proposal opening. If the foreign entity is not required to obtain a certificate as provided in KRS 14A.9-010, the foreign entity should identify the applicable exception. Foreign entity is defined within KRS 14A.1-070.

For all foreign entities required to obtain a certificate of authority to transact business in the Commonwealth, if a copy of the certificate is not received by the contracting agency within the time frame identified above, the foreign entity's solicitation response shall be deemed non-responsive or the awarded contract shall be cancelled.

Businesses can register with the Secretary of State at https://secure.kentucky.gov/sos/ftbr/welcome.aspx .

SPECIAL NOTE FOR PROJECT QUESTIONS DURING ADVERTISEMENT

Questions about projects during the advertisement should be submitted in writing to the Division of Construction Procurement. This may be done by fax (502) 564-7299 or email to kytc.projectquestions@ky.gov. The Department will attempt to answer all submitted questions. The Department reserves the right not to answer if the question is not pertinent or does not aid in clarifying the project intent.

The deadline for posting answers will be 3:00 pm Eastern Daylight Time, the day preceding the Letting. Questions may be submitted until this deadline with the understanding that the later a question is submitted, the less likely an answer will be able to be provided.

The questions and answers will be posted for each Letting under the heading "Questions & Answers" on the Construction Procurement website (www.transportation.ky.gov/contract). The answers provided shall be considered part of

this Special Note and, in case of a discrepancy, will govern over all other bidding documents.

HARDWOOD REMOVAL RESTRICTIONS

The US Department of Agriculture has imposed a quarantine in Kentucky and several surrounding states, to prevent the spread of an invasive insect, the emerald ash borer. Hardwood cut in conjunction with the project may not be removed from the state. Chipping or burning on site is the preferred method of disposal.

INSTRUCTIONS FOR EXCESS MATERIAL SITES AND BORROW SITES

Identification of excess material sites and borrow sites shall be the responsibility of the Contractor. The Contractor shall be responsible for compliance with all applicable state and federal laws and may wish to consult with the US Fish and Wildlife Service to seek protection under Section 10 of the Endangered Species Act for these activities.

ACCESS TO RECORDS

The contractor, as defined in KRS 45A.030 (9) agrees that the contracting agency, the Finance and Administration Cabinet, the Auditor of Public Accounts, and the Legislative Research Commission, or their duly authorized representatives, shall have access to any books, documents, papers, records, or other evidence, which are directly pertinent to this contract for the purpose of financial audit or program review. Records and other prequalification information confidentially disclosed as part of the bid process shall not be deemed as directly pertinent to the contract and shall be exempt from disclosure as provided in KRS 61.878(1)(c). The contractor also recognizes that any books, documents, papers, records, or other evidence, received during a financial audit or program review shall be subject to the Kentucky Open Records Act, KRS 61.870 to 61.884.

In the event of a dispute between the contractor and the contracting agency, Attorney General, or the Auditor of Public Accounts over documents that are eligible for production and review, the Finance and Administration Cabinet shall review the dispute and issue a determination, in accordance with Secretary's Order 11-004. (See attachment)

10/29/12

Commonwealth of Kentucky
Finance and Administration Cabinet
OFFICE OF THE SECRETARY
Room 383, Capitol Annex
702 Capital Avenue
Frankfort, KY 40601-3462
(502) 564-4240
Fax (502) 564-6785

Steven L. Beshear
Governor

Lori H. Flanery
Secretary

SECRETARY'S ORDER 11-004

FINANCE AND ADMINISTRATION CABINET

Vendor Document Disclosure

WHEREAS, in order to promote accountability and transparency in governmental operations, the Finance and Administration Cabinet believes that a mechanism should be created which would provide for review and assistance to an Executive Branch agency if said agency cannot obtain access to documents that it deems necessary to conduct a review of the records of a private vendor that holds a contract to provide goods and/or services to the Commonwealth; and

WHEREAS, in order to promote accountability and transparency in governmental operations, the Finance and Administration Cabinet believes that a mechanism should be created which would provide for review and assistance to an Executive Branch agency if said agency cannot obtain access to documents that it deems necessary during the course of an audit, investigation or any other inquiry by an Executive Branch agency that involves the review of documents; and

WHEREAS, KRS 42.014 and KRS 12.270 authorizes the Secretary of the Finance and Administration Cabinet to establish the internal organization and assignment of functions which are not established by statute relating to the Finance and Administration Cabinet; further, KRS Chapter 45A.050 and 45A.230 authorizes the Secretary of the Finance and Administration Cabinet to procure, manage and control all supplies and services that are procured by the Commonwealth and to intervene in controversies among vendors and state agencies; and

NOW, THEREFORE, pursuant to the authority vested in me by KRS 42.014, KRS 12.270, KRS 45A.050, and 45A.230, I, Lori H. Flanery, Secretary of the Finance and Administration Cabinet, do hereby order and direct the following:

I. Upon the request of an Executive Branch agency, the Finance and Administration Cabinet ("FAC") shall formally review any dispute arising where the agency has requested documents from a private vendor that holds a state contract and the vendor has refused access to said documents under a claim that said documents are not directly pertinent or relevant to the agency's inquiry upon which the document request was predicated.

II. Upon the request of an Executive Branch agency, the FAC shall formally review any situation where the agency has requested documents that the agency deems necessary to

conduct audits, investigations or any other formal inquiry where a dispute has arisen as to what documents are necessary to conclude the inquiry.

III. Upon receipt of a request by a state agency pursuant to Sections I & II, the FAC shall consider the request from the Executive Branch agency and the position of the vendor or party opposing the disclosure of the documents, applying any and all relevant law to the facts and circumstances of the matter in controversy. After FAC's review is complete, FAC shall issue a Determination which sets out FAC's position as to what documents and/or records, if any, should be disclosed to the requesting agency. The Determination shall be issued within 30 days of receipt of the request from the agency. This time period may be extended for good cause.

IV. If the Determination concludes that documents are being wrongfully withheld by the private vendor or other party opposing the disclosure from the state agency, the private vendor shall immediately comply with the FAC's Determination. Should the private vendor or other party refuse to comply with FAC's Determination, then the FAC, in concert with the requesting agency, shall effectuate any and all options that it possesses to obtain the documents in question, including, but not limited to, jointly initiating an action in the appropriate court for relief.

V. Any provisions of any prior Order that conflicts with the provisions of this Order shall be deemed null and void.

FEDERAL CONTRACT NOTES

The Kentucky Department of Highways, in accordance with the Regulations of the United States Department of Transportation 23 CFR 635.112 (h), hereby notifies all bidders that failure by a bidder to comply with all applicable sections of the current Kentucky Standard Specifications, including, but not limited to the following, may result in a bid not being considered responsive and thus not eligible to be considered for award:

102.02 Current Capacity Rating 102.10 Delivery of Proposals
102.08 Irregular Proposals 102.14 Disqualification of Bidders
102.09 Proposal Guaranty

CIVIL RIGHTS ACT OF 1964

The Kentucky Department of Highways, in accordance with the provisions of Title VI of the Civil Rights Act of 1964 (78 Stat. 252) and the Regulations of the Federal Department of Transportation (49 C.F.R., Part 21), issued pursuant to such Act, hereby notifies all bidders that it will affirmatively insure that the contract entered into pursuant to this advertisement will be awarded to the lowest responsible bidder without discrimination on the ground of race, color, or national origin.

NOTICE TO ALL BIDDERS

To report bid rigging activities call: 1-800-424-9071.

The U.S. Department of Transportation (DOT) operates the above toll-free “hotline” Monday through Friday, 8:00 a.m. to 5:00 p.m. eastern time. Anyone with knowledge of possible bid rigging, bidder collusion, or other fraudulent activities should use the “hotline” to report such activities.

The “hotline” is part of the DOT’s continuing effort to identify and investigate highway construction contract fraud and abuse and is operated under the direction of the DOT Inspector General. All information will be treated confidentially and caller anonymity will be respected.

SECOND TIER SUBCONTRACTS

Second Tier subcontracts on federally assisted projects shall be permitted. However, in the case of DBE’s, second tier subcontracts will only be permitted where the other subcontractor is also a DBE. All second tier subcontracts shall have the consent of both the Contractor and the Engineer.

DISADVANTAGED BUSINESS ENTERPRISE PROGRAM

It is the policy of the Kentucky Transportation Cabinet ("the Cabinet") that Disadvantaged Business Enterprises ("DBE") shall have the opportunity to participate in the performance of highway construction projects financed in whole or in part by Federal Funds in order to create a level playing field for all businesses who wish to contract with the Cabinet. To that end, the Cabinet will comply with the regulations found in 49 CFR Part 26, and the definitions and requirements contained therein shall be adopted as if set out verbatim herein.

The Cabinet, contractors, subcontractors, and sub-recipients shall not discriminate on the basis of race, color, national origin, or sex in the performance of work performed pursuant to Cabinet contracts. The contractor shall carry out applicable requirements of 49 CFR 26 in the award and administration of federally assisted highway construction projects. The contractor will include this provision in all its subcontracts and supply agreements pertaining to contracts with the Cabinet.

Failure by the contractor to carry out these requirements is a material breach of its contract with the Cabinet, which may result in the termination of the contract or such other remedy as the Cabinet deems necessary.

DBE GOAL

The Disadvantaged Business Enterprise (DBE) goal established for this contract, as listed on the front page of the proposal, is the percentage of the total value of the contract.

The contractor shall exercise all necessary and reasonable steps to ensure that Disadvantaged Business Enterprises participate in a least the percent of the contract as set forth above as goals for this contract.

OBLIGATION OF CONTRACTORS

Each contractor prequalified to perform work on Cabinet projects shall designate and make known to the Cabinet a liaison officer who is assigned the responsibility of effectively administering and promoting an active program for utilization of DBEs.

If a formal goal has not been designated for the contract, all contractors are encouraged to consider DBEs for subcontract work as well as for the supply of material and services needed to perform this work.

Contractors are encouraged to use the services of banks owned and controlled by minorities and women.

CERTIFICATION OF CONTRACT GOAL

Contractors shall include the following certification in bids for projects for which a DBE goal has been established. BIDS SUBMITTED WHICH DO NOT INCLUDE CERTIFICATION OF DBE PARTICIPATION WILL NOT BE ACCEPTED. These bids will not be considered for award by the Cabinet and they will be returned to the bidder.

"The bidder certifies that it has secured participation by Disadvantaged Business Enterprises ("DBE") in the amount of ____ percent of the total value of this contract and that the DBE participation is in compliance with the requirements of 49 CFR 26 and the policies of the Kentucky Transportation Cabinet pertaining to the DBE Program."

The certification statement is located in the electronic bid file. All contractors must certify their DBE participation on that page. DBEs utilized in achieving the DBE goal must be certified and prequalified for the work items at the time the bid is submitted.

DBE PARTICIPATION PLAN

Lowest responsive bidders must submit the *DBE Plan/ Subcontractor Request*, form TC 63-35 DBE, within 10 days of the letting. This is necessary before the Awards Committee will review and make a recommendation. **The project will not be considered for award prior to submission and approval of the apparent low bidder's DBE Plan/Subcontractor Request.**

The DBE Participation Plan shall include the following:

1 Name and address of DBE Subcontractor(s) and/or supplier(s) intended to be used in the proposed project;

2 Description of the work each is to perform including the work item , unit, quantity, unit price and total amount of the work to be performed by the individual DBE. The Project Code Number (PCN), Category Number, and the Project Line Number can be found in the "material listing" on the Construction Procurement website under the specific letting;

3 The dollar value of each proposed DBE subcontract and the percentage of total project contract value this represents. DBE participation may be counted as follows; a) If DBE suppliers and manufactures assume actual and contractual responsibility, the dollar value of materials to be furnished will be counted toward the goal as follows:

- The entire expenditure paid to a DBE manufacturer;
- 60 percent of expenditures to DBE suppliers that are not manufacturers provided the supplier is a regular dealer in the product involved. A regular dealer must be engaged in, as its principal business and in its own name, the sale of products to

the public, maintain an inventory and own and operate distribution equipment; and

- The amount of fees or commissions charged by the DBE firms for a bona fide service, such as professional, technical, consultant, or managerial services and assistance in the procurement of essential personnel, facilities, equipment, materials, supplies, delivery of materials and supplies or for furnishing bonds, or insurance, providing such fees or commissions are determined to be reasonable and customary.

b) The dollar value of services provided by DBEs such as quality control testing, equipment repair and maintenance, engineering, staking, etc.;

c) The dollar value of joint ventures. DBE credit for joint ventures will be limited to the dollar amount of the work actually performed by the DBE in the joint venture;

4 Written and signed documentation of the bidder's commitment to use a DBE contractor whose participation is being utilized to meet the DBE goal; and

5 Written and signed confirmation from the DBE that it is participating in the contract as provided in the prime contractor's commitment.

UPON AWARD AND BEFORE A WORK ORDER WILL BE ISSUED

Contractors must submit the signed subcontract between the contractor and the DBE contractor, the DBE's certificate of insurance, and an affidavit for bidders, offerors, and contractors from the DBE to the Division of Construction Procurement. The affidavit can be found on the Construction Procurement website. If the DBE is a supplier of materials for the project, a signed purchase order and an affidavit for bidders, offerors, and contractors must be submitted to the Division of Construction Procurement.

Changes to DBE Participation Plans must be approved by the Cabinet. The Cabinet may consider extenuating circumstances including, but not limited to, changes in the nature or scope of the project, the inability or unwillingness of a DBE to perform the work in accordance with the bid, and/or other circumstances beyond the control of the prime contractor.

CONSIDERATION OF GOOD FAITH EFFORTS REQUESTS

If the DBE participation submitted in the bid by the apparent lowest responsive bidder does not meet or exceed the DBE contract goal, the apparent lowest responsive bidder must submit a Good Faith Effort Package to satisfy the Cabinet that sufficient good faith efforts were made to meet the contract goals prior to submission of the bid. Efforts to increase the goal after bid submission will not be considered in justifying the good faith effort, unless the contractor can show that the proposed DBE was solicited prior to the letting date. DBEs utilized in achieving the DBE goal must be certified and prequalified for the work items at the time the bid is submitted. One complete set and nine (9) copies of this information must be received in the

office of the Division of Contract Procurement no later than 12:00 noon of the tenth calendar day after receipt of notification that they are the apparent low bidder.

Where the information submitted includes repetitious solicitation letters it will be acceptable to submit a sample representative letter along with a distribution list of the firms solicited. Documentation of DBE quotations shall be a part of the good faith effort submittal as necessary to demonstrate compliance with the factors listed below which the Cabinet considers in judging good faith efforts. This documentation may include written subcontractors' quotations, telephone log notations of verbal quotations, or other types of quotation documentation.

The Good Faith Effort Package shall include, but may not be limited to information showing evidence of the following:

1 Whether the bidder attended any pre-bid meetings that were scheduled by the Cabinet to inform DBEs of subcontracting opportunities;
2 Whether the bidder provided solicitations through all reasonable and available means;
3 Whether the bidder provided written notice to all DBEs listed in the DBE directory at the time of the letting who are prequalified in the areas of work that the bidder will be subcontracting;
4 Whether the bidder followed up initial solicitations of interest by contacting DBEs to determine with certainly whether they were interested. If a reasonable amount of DBEs within the targeted districts do not provide an intent to quote or no DBEs are prequalified in the subcontracted areas, the bidder must notify the DBE Liaison in the Office of Minority Affairs to give notification of the bidder's inability to get DBE quotes;
5 Whether the bidder selected portions of the work to be performed by DBEs in order to increase the likelihood of meeting the contract goals. This includes, where appropriate, breaking out contract work items into economically feasible units to facilitate DBE participation, even when the prime contractor might otherwise perform these work items with its own forces;
6 Whether the bidder provided interested DBEs with adequate and timely information about the plans, specifications, and requirements of the contract;
7 Whether the bidder negotiated in good faith with interested DBEs not rejecting them as unqualified without sound reasons based on a thorough investigation of their capabilities. Any rejection should be so noted in writing with a description as to why an agreement could not be reached;
8 Whether quotations were received from interested DBE firms but were rejected as unacceptable without sound reasons why the quotations were considered unacceptable. The fact that the DBE firm's quotation for the work is not the lowest quotation received will not in itself be considered as a sound reason for rejecting the quotation as unacceptable. The fact that the bidder has the ability and/or desire to perform the contract work with its own forces will not be considered a sound reason for rejecting a DBE quote. Nothing in this provision shall be construed to require the bidder to accept unreasonable quotes in order to satisfy DBE goals;
9 Whether the bidder specifically negotiated with subcontractors to assume part of the responsibility to meet the contract DBE goal when the work to be subcontracted includes potential DBE participation;
10 Whether the bidder made any efforts and/or offered assistance to interested DBEs in obtaining the necessary equipment, supplies, materials, insurance and/or bonding to satisfy the

work requirements of the bid proposal; and

11 Any other evidence that the bidder submits which may show that the bidder has made reasonable good faith efforts to include DBE participation.

FAILURE TO MEET GOOD FAITH REQUIREMENT

Where the apparent lowest responsive bidder fails to submit sufficient participation by DBE firms to meet the contract goal and upon a determination by the Good Faith Committee based upon the information submitted that the apparent lowest responsive bidder failed to make sufficient reasonable efforts to meet the contract goal, the bidder will be offered the opportunity to meet in person for administrative reconsideration. The bidder will be notified of the Committee's decision within 24 hours of its decision. The bidder will have 24 hours to request reconsideration of the Committee's decision. The reconsideration meeting will be held within two days of the receipt of a request by the bidder for reconsideration.

The request for reconsideration will be heard by the Office of the Secretary. The bidder will have the opportunity to present written documentation or argument concerning the issue of whether it met the goal or made an adequate good faith effort. The bidder will receive a written decision on the reconsideration explaining the basis for the finding that the bidder did or did not meet the goal or made adequate Good Faith efforts to do so.

The result of the reconsideration process is not administratively appealable to the Cabinet or to the United States Department of Transportation.

The Cabinet reserves the right to award the contract to the next lowest responsive bidder or to rebid the contract in the event that the contract is not awarded to the low bidder as the result of a failure to meet the good faith requirement.

SANCTIONS FOR FAILURE TO MEET DBE REQUIREMENTS OF THE PROJECT

Failure by the prime contractor to fulfill the DBE requirements of a project under contract or to demonstrate good faith efforts to meet the goal constitutes a breach of contract. When this occurs, the Cabinet will hold the prime contractor accountable, as would be the case with all other contract provisions. Therefore, the contractor's failure to carry our the DBE contract requirements shall constitute a breach of contract and as such the Cabinet reserves the right to exercise all administrative remedies at its disposal including, but not limited to the following:

- Disallow credit toward the DBE goal;
- Withholding progress payments;
- Withholding payment to the prime in an amount equal to the unmet portion of the contract goal; and/or
- Termination of the contract.

PROMPT PAYMENT

The prime contractor will be required to pay the DBE within seven (7) working days after he or she has received payment from the Kentucky Transportation Cabinet for work performed or materials furnished.

CONTRACTOR REPORTING

All contractors must keep detailed records and provide reports to the Cabinet on their progress in meeting the DBE requirement on any highway contract. These records may include, but shall not be limited to payroll, lease agreements, cancelled payroll checks, executed subcontracting agreements, etc. Prime contractors will be required to submit certified reports on monies paid to each DBE subcontractor or supplier utilized to meet a DBE goal. These reports must be submitted within 14 days of payment made to the DBE contractor.

Payment information that needs to be reported includes date the payment is sent to the DBE, check number, Contract ID, amount of payment and the check date. Before Final Payment is made on this contract, the Prime Contractor will certify that all payments were made to the DBE subcontractor and/or DBE suppliers.

The Prime Contractor should supply the payment information at the time the DBE is compensated for their work. Form to use is located at:
http://transportation.ky.gov/Construction/Pages/Subcontracts.aspx

The prime contractor should notify the KYTC Office of Civil Rights and Small Business Development seven (7) days prior to DBE contractors commencing work on the project. The contact is Melvin Bynes and the telephone number is (502) 564-3601.

Photocopied payments and completed form to be submitted to: Office of Civil Rights and Small Business Development 6th Floor West 200 Mero Street Frankfort, KY 40622

DEFAULT OR DECERTIFICATION OF THE DBE

If the DBE subcontractor or supplier is decertified or defaults in the performance of its work, and the overall goal cannot be credited for the uncompleted work, the prime contractor may utilize a substitute DBE or elect to fulfill the DBE goal with another DBE on a different work item. If after exerting good faith effort in accordance with the Cabinet's Good Faith Effort policies and procedures, the prime contractor is unable to replace the DBE, then the unmet portion of the goal may be waived at the discretion of the Cabinet.

06/20/2014

NATIONAL HIGHWAY

Be advised this project is on the NATIONAL HIGHWAY SYSTEM.

DGA BASE

Unless otherwise noted, the Department estimates the rate of application for DGA Base to be 115 lbs/sy per inch of depth.

SPECIAL NOTE FOR
GUARDRAIL END TREATMENT TYPE 1

Contrary to KYTC Standard Drawing RBR-020-05, the guardrail end treatment ET-Plus manufactured by Trinity Industries will not be permitted as an option for bid item “Guardrail End Treatment Type 1”.

SPECIAL PROVISION FOR WASTE AND BORROW SITES

Obtain U.S. Army Corps of Engineer's approval before utilizing a waste or borrow site that involves "Waters of the United States". The Corps of Engineers defines "Waters of the United States" as perennial or intermittent streams, ponds or wetlands. The Corps of Engineers also considers ephemeral streams, typically dry except during rainfall but having a defined drainage channel, to be jurisdictional waters. Direct questions concerning any potential impacts to "Waters of the United States" to the attention of the appropriate District Office for the Corps of Engineers for a determination prior to disturbance. Be responsible for any fees associated with obtaining approval for waste and borrow sites from the U.S. Army Corps of Engineer or other appropriate regulatory agencies.

1-296 Waste & Borrow Sites
01/02/2012

COORDINATION OF WORK WITH OTHER CONTRACTS

Be advised, there may be an active project(s) adjacent to or within this project. The Engineer will coordinate the work of the Contractors. See Section 105.06.

1-3193 Coordination Contracts
01/02/2012

SPECIAL NOTE FOR DOUBLE ASPHALT SEAL COAT

Use RS-2 or RS-2C asphalt material that is compatible with the seal aggregate. Apply the first course of asphalt seal coat at the rate of 3.2 lbs/sy of asphalt and 30 lbs/sy of size #78 seal coat aggregate. Apply the second course at 2.8 lbs/sy of asphaltt and 20 lbs/sy of size #9M seal coat aggregate. The Engineer may adjust the rate of application as conditions warrant. Use caution in applying liquid asphalt material to avoid over spray getting on curbs, gutter, barrier walls, bridges, guardrail, and other roadway appurtenances.

The Department will not measure any surface preparation required prior to applying the asphalt seal coat, but shall be incidental to “Asphalt Material for Asphalt Seal Coat”.

1-3215 Double Asphalt Seal Coat
01/02/2012

SPECIAL NOTES FOR GUARDRAIL

I. DESCRIPTION

Except as specified herein, perform all work in accordance with the Department's Standard and Supplemental Specifications and Standard and Sepia Drawings, current editions. Article references are to the Standard Specifications.

Furnish all equipment, labor, materials, and incidentals for the following work items:

(1) Site preparation; (2) Remove existing guardrail systems; (3) Construct Guardrail, End Treatments, Bridge End Connectors, Bridge Rail – Thrie Beam Retrofit, Guardrail – Single Face A, and Terminal Sections, as applicable; (4) Install Delineators for Guardrail; (5) Maintain and Control Traffic; and (6) all other work specified as part of this contract.

II. MATERIALS

Except as specified herein, provide for all materials to be sampled and tested in accordance with the Department's Sampling Manual and make the materials available for sampling a sufficient time in advance of the use of the materials to allow for the necessary time for testing.

A. Maintain and Control Traffic. See Traffic Control Plan.

B. Guardrail. Furnish guardrail system components according to section 814 and the Standard and Sepia Drawings; except use steel posts only, no alternates. Furnish Bridge Rail - Thrie Beam Retrofit according to the Detail Sheets within this proposal. Furnish Guardrail – Steel W Beam – Single Face A according to the Detail Sheets within this proposal; except use steel posts only, no alternates.

C. Delineators for Guardrail. Furnish white and/or yellow Delineators for Guardrail according to the Delineators for Guardrail Sepia Drawing.

D. DGA. Furnish Dense Graded Aggregate as per Section 805.

III. CONSTRUCTION METHODS

A. Maintain and Control Traffic. See Traffic Control Plan.

B. Site Preparation. Remove existing guardrail system including the guardrail end treatments, Bridge End connectors and all other elements of the existing guardrail system as per Section 719, except that the Contractor will take possession of all concrete posts and all concrete associated with existing bridge and/or guardrail end treatments. Locate

all disposal areas off the Right of Way. Be responsible for all site preparation, including but not limited to, clearing and grubbing, excavation, embankment, and removal of all obstructions or any other items; regrading, reshaping, adding and compacting of suitable materials on the existing shoulders to provide proper template or foundation for the guardrail; filling voids left as the result of removing existing guardrail and guard posts with dry sand; temporary pollution and erosion control; disposal, of excess and waste materials and debris; and final dressing, cleanup, and seeding and protection. Perform all site preparation as approved or directed by the engineer.

C. Guardrail. Except as specified herein, construct guardrail system according to Section 719 and the Standard and Sepia Drawings. Locations listed on the summary and/or shown on the drawings are approximate only. The Engineer will determine the exact termini for individual guardrail installations at the time of construction. Unless directed otherwise by the Engineer, provide a minimum two (2) foot shoulder width. Construct radii at entrances and road intersections as directed by the Engineer.

Erect guardrail to the lines and grades shown on the current Standard and Sepia Drawings or as directed by the Engineer by any method approved by the Engineer which allows construction of the guardrail to the true grade without apparent sags.

When removing existing guardrail and installing new guardrail, do not leave the blunt end exposed where it would be hazardous to the public. When it is not practical to complete the construction of the guardrail and the permanent end treatments and terminal sections first, provide a temporary end by connecting at least 25 feet of rail to the last post, and by slightly flaring, and burying the end of the rail completely into the existing shoulder. If left overnight, place a drum with bridge panel in advance of the guardrail end and maintain during use.

Erect “Bridge Rail – Thrie Beam Retrofit” and “Guardrail – Single Face A” according to the Detail Sheets and applicable Standard and Sepia Drawings.

D. Delineators for Guardrail. Construct Delineators for Guardrail according to the Delineators for Guardrail Sepia Drawing.

E. Property Damage. Be responsible for all damage to public and/or private property resulting from the work. Restore damaged roadway features and private property at no additional cost to the Department.

F. Coordination with Utility Companies. Locate all underground, above ground, and overhead utilities prior to beginning construction. Be responsible for contacting and maintaining liaison with all utility companies that have utilities located within the project limits. Do not disturb existing overhead or underground utilities. It is not anticipated that any utility facilities will need to be relocated and/or adjusted; however, in the event that it is discovered that the work does require that utilities be relocated and/or adjusted, the utility companies will work concurrently with the Contractor while relocating their

facilities. Be responsible for repairing all utility damage that occurs as a result of guardrail operations at no additional cost to the Department.

G. Right of Way Limits. The Department has not established exact limits of the Right-of-Way. Limit work activities to obvious Right-of-Way, permanent or temporary easements, and work areas secured by the Department through consent and release of the adjacent property owners. Be responsible for all encroachments onto private lands.

H. Disposal of Waste. Dispose of all removed concrete, debris, and other waste and debris off the Right-of-Way at sites obtained by the Contractor at no additional cost to the Department. See Special Provision for Waste and Borrow Sites.

I. Final Dressing, Clean Up, and Seeding and Protection. Apply Class A Final Dressing to all disturbed areas, both on and off the Right-of-Way. Sow all disturbed earthen areas with the applicable seed mixture(s) according to Section 212.03.03.

IV. METHOD OF MEASUREMENT

A. Maintain and Control Traffic. See Traffic Control Plan.

B. Site preparation. Other than the bid items listed, the Department will not measure Site Preparation for separate payment but shall be incidental to the project bid items.

C. Guardrail, End Treatments, Bridge End Connectors, Terminal Sections, and Remove Guardrail. The Department will measure according to Section 719.04.

D. Bridge Rail – Thrie Beam Retrofit. The Department will measure Guardrail Thrie Beam in linear feet along the face of the guardrail, according to the pay limits as shown on the Detail Sheets within this proposal.

E. Guardrail – Steel W Beam – Single Face A. The Department will measure Guardrail – Steel W Beam – Single Face A in linear feet along the face of the guardrail, according to the pay limits as shown on the Detail Sheets within this proposal.

F. Delineators for Guardrail. See Delineators for Guardrail Sepia Drawing.

G. DGA. The Department will measure according to Section 302.

H. Final Dressing, Clean Up, and Seeding and Protection. The Department will NOT measure for payment the operations of Final Dressing, Clean Up, and Seeding and Protection. These activities shall be incidental to Guardrail, End Treatments, Bridge End Connectors, and Terminal Sections as applicable.

V. BASIS OF PAYMENT

A. Maintain and Control Traffic. See Traffic Control Plan.

B. Guardrail, End Treatments, Bridge End Connectors, Terminal Sections, and Remove Guardrail. The Department will make payment according to Section 719.05.

C. Bridge Rail – Thrie Beam Retrofit. The Department will make payment for the completed and accepted quantities of Guardrail Thrie Beam in linear feet, according to the pay limits as shown on the Detail Sheets within this proposal. Payment at the Contract unit price per linear foot shall be full compensation for furnishing all materials, equipment, tools, hardware, labor, and incidentals necessary to properly install the thrie beam guardrail along the existing bridge structure as shown on the Detail Sheets and according to these notes.

D. Guardrail – Steel W Beam – Single Face A. The Department will make payment for the completed and accepted quantities of Guardrail – Steel W Beam – Single Face A in linear feet, according to the pay limits as shown on the Detail Sheets within this proposal. Payment at the Contract unit price per linear foot shall be full compensation for furnishing all materials, equipment, tools, hardware, labor, and incidentals necessary to properly install the approach guardrail within the 25'-0" limits at each corner of the structure as shown on the Detail Sheets and according to these notes.

E. Delineators for Guardrail. See Delineators for Guardrail Sepia Drawing.

F. DGA. The Department will make payment according to Section 302.

SPECIAL NOTE FOR TYPICAL SECTION DIMENSIONS

Consider the dimensions shown on the typical sections for pavement and shoulder widths and thickness' to be nominal or typical dimensions. The Engineer may direct or approve varying the actual dimensions to be constructed to fit existing conditions. Do not widen existing pavement or shoulders unless specified elsewhere in this proposal or directed by the engineer.

1-3725 Typical Section Dimensions
01/02/2012

TRAFFIC CONTROL PLAN

TRAFFIC CONTROL GENERAL

Except as provided herein, maintain and control traffic in accordance with the Standard and Supplemental Specifications and the Standard and Sepia Drawings, current editions. Except for the roadway and traffic control bid items listed, all items of work necessary to maintain and control traffic will be paid at the lump sum bid price to "Maintain and Control Traffic".

Contrary to Section 106.01, furnish new, or used in like new condition, traffic control devices at the beginning of the work and maintain in like new condition until completion of the work.

PROJECT PHASING & CONSTRUCTION PROCEDURES

Maintain alternating one way traffic during construction. Provide a minimum clear lane width of 11 feet; however, provide for the passage of vehicles of up to 16 feet in width. If traffic should be stopped due to construction operations, and a school bus or emergency vehicle on an official run arrives on the scene, make provisions for the passage of the school bus or emergency vehicle as quickly as possible.

LANE CLOSURES

The Engineer may specify days and hours when lane closures will not be allowed. Do not leave lane closures in place during non-working hours.

SIGNS

Contrary to section 112.04.02, only long term signs (signs intended to be continuously in place for more than 3 days) will be measured for payment; short term signs (signs intended to be left in place for 3 days or less) will not be measured for payment but will be incidental to Maintain and Control Traffic.

CHANGEABLE MESSAGE SIGNS

Provide changeable message signs in advance of and within the project at locations determined by the Engineer. If work is in progress concurrently in both directions or if more than one lane closure is in place in the same direction of travel, provide additional changeable message signs as directed by the Engineer. Place changeable message signs one mile in advance of the anticipated queue at each lane closure. As the actual queue lengthens and/or shortens, relocate or provide additional changeable message signs so that traffic has warning of slowed or stopped traffic at least one mile but not more than two miles before reaching the end of the actual queue. The Engineer may vary the designated locations as the work progresses. The Engineer will determine the messages to be displayed. In the event of damage or mechanical/electrical failure, repair or replace the Changeable Message Sign within 24 hours. The Department will measure for payment the maximum number of Changeable Message Signs in concurrent use at the same time on a single day on all sections

of the contract. The Department will measure individual Changeable Message Signs only once for payment, regardless of how many times they are set, reset, removed, and relocated during the duration of the project. The Department will not measure replacements for damaged Changeable Message Signs or for signs the Engineer directs be replaced due to poor condition or readability. Retain possession of the Changeable Message Signs upon completion of the work.

BARRICADES

The Department will not measure barricades used in lieu of barrels and cones for channelization or delineation, but shall be incidental to Maintain and Control Traffic according to Section 112.04.01.

PAVEMENT EDGE DROP-OFFS

Do not allow a pavement edge between opposing directions of traffic or lanes that traffic is expected to cross in a lane change situation with an elevation difference greater than 1½". Place Warning signs (MUTCD W8-11 or W8-9A) in advance of and at 1500' intervals throughout the drop-off area. Dual post the signs on both sides of the traveled way. Wedge all transverse transitions between resurfaced and unresurfaced areas which traffic may cross with asphalt mixture for leveling and wedging. Remove the wedges prior to placement of the final surface course.

Protect pavement edges that traffic is not expected to cross, except accidentally, as follows:

Less than 2" - No protection required.

2" to 4" - Place plastic drums, vertical panels, or barricades every 50 feet. During daylight working hours only, the Engineer will allow the Contractor to use cones in lieu of plastic drums, panels, and barricades. Wedge the drop-off with DGA or asphalt mixture for leveling and wedging with a 1:1 or flatter slope in daylight hours, or 3:1 or flatter slope during nighttime hours, when work is not active in the drop-off area.

Greater than 4" - Protect drop-offs greater than 4 inches within 10 feet of traffic by placing drums, vertical panels, or barricades every 25 feet. The Engineer will not allow the use of cones in lieu of drums, vertical panels, or barricades for drop-offs greater than 4". Place Type III Barricades directly in front of the drop-off facing on coming traffic in both directions of travel. Provide warning signs as shown on the Standard Drawings or as directed by the Engineer

Pedestrians & Bicycles - Protect pedestrian and bicycle traffic as directed by the Engineer.

USE AND PLACEMENT OF CHANGEABLE MESSAGE SIGNS

The following policy is based upon current Changeable Message Signs (CMS) standards and practice from many sources, including the Federal Highway Administration (FHWA), other State Departments of Transportation, and Traffic Safety Associations. It is understood that each CMS installation or use requires individual consideration due to the specific location or purpose. However, there will be elements that are constant in nearly all applications. Accordingly these recommended guidelines bring a level of uniformity, while still being open to regional experience and engineering judgment.

Application

The primary purpose of CMS is to advise the driver of unexpected traffic and routing situations. Examples of applications where CMS can be effective include:

- Closures (road, lane, bridge, ramp, shoulder, interstate)
- Changes in alignment or surface conditions
- Significant delays, congestion
- Construction/maintenance activities (delays, future activities)
- Detours/alternative routes
- Special events with traffic and safety implications
- Crash/incidents
- Vehicle restrictions (width, height, weight, flammable)
- Advance notice of new traffic control devices
- Real-time traffic conditions (must be kept up to date)
- Weather /driving conditions, environmental conditions, Roadway Weather Information Systems
- Emergency Situations
- Referral to Highway Advisory Radio (if available)
- Messages as approved by the County Engineer's Office

CMS should not be used for:

- Replacement of static signs (e.g. road work ahead), regulatory signage (e.g. speed limits), pavement markings, standard traffic control devices, conventional warning or guide signs.
- Replacement of lighted arrow board
- Advertising (Don't advertise the event unless clarifying "action" to be taken by driver – e.g. Speedway traffic next exit)
- Generic messages
- Test messages (portable signs only)
- Describe recurrent congestion (e.g. rush hour)
- Public service announcements (not traffic related)

Messages

Basic principles that are important to providing proper messages and insuring the proper operation of a CMS are:

- Visible for at least ½ mile under ideal daytime and nighttime conditions
- Legible from all lanes a minimum of 650 feet
- Entire message readable twice while traveling at the posted speed
- No more than two message panels should be used (three panels may be used on roadways where vehicles are traveling less than 45 mph). A panel is the message that fits on the face of the sign without flipping or scrolling.
- Each panel should convey a single thought; short and concise
- Do not use two unrelated panels on a sign
- Do not use the sign for two unrelated messages
- Should not scroll text horizontally or vertically
- Should not contain both the words left and right
- Use standardized abbreviations and messages
- Should be accurate and timely
- Avoid filler/unnecessary words and periods (hazardous, a, an, the)
- Avoid use of speed limits
- Use words (not numbers) for dates

Placement

Placement of the CMS is important to insure that the sign is visible to the driver and provides ample time to take any necessary action. Some of the following principles may only be applicable to controlled access roadways. The basic principles of placement for a CMS are:

- When 2 signs are needed, place on same side of roadway and at least 1,000 feet apart
- Place behind semi-rigid/rigid protection (guardrail, barrier) or outside of the clear zone
- Place 1,000 feet in advance of work zone; at least one mile ahead of decision point
- Normally place on right side of roadway; but should be placed closest to the affected lane so that either side is acceptable
- Signs should not be dual mounted (one on each side of roadway facing same direction)
- Point trailer hitch downstream
- Secure to immovable object to prevent theft (if necessary)
- Do not place in sags or just beyond crest
- Check for reflection of sun to prevent the blinding of motorist
- Should be turned ~3 degrees outward from perpendicular to the edge of pavement
- Bottom of sign should be 7 feet above the elevation of edge of roadway
- Should be removed when not in use

Traffic Control Plan
Page 5 of 7

Standard Abbreviations

The following is a list of standard abbreviations to be used on CMS:

Word	Abbrev	Example
Access	ACCS	ACCIDENT AHEAD/ USE ACCS RD NEXT RIGHT
Alternate	ALT	ACCIDENT AHEAD/ USE ALT RTE NEXT RIGHT
Avenue	AVE	FIFTH AVE CLOSED/ DETOUR NEXT LEFT
Blocked	BLKD	FIFTH AVE BLKD/ MERGE LEFT
Boulevard	BLVD	MAIN BLVD CLOSED/ USE ALT RTE
Bridge	BRDG	SMITH BRDG CLOSED/ USE ALT RTE
Cardinal Directions	N, S, E, W	N I75 CLOSED/ DETOUR EXIT 30
Center	CNTR	CNTR LANE CLOSED/ MERGE LEFT
Commercial	COMM	OVRSZ COMM VEH/ USE I275
Condition	COND	ICY COND POSSIBLE
Congested	CONG	HVY CONG NEXT 3 MI
Construction	CONST	CONST WORK AHEAD/ EXPECT DELAYS
Downtown	DWNTN	DWNTN TRAF USE EX 40
Eastbound	E-BND	E-BND I64 CLOSED/ DETOUR EXIT 20
Emergency	EMER	EMER VEH AHEAD/ PREPARE TO STOP
Entrance, Enter	EX, EXT	DWNTN TRAF USE EX 40
Expressway	EXPWY	WTRSN EXPWY CLOSED/ DETOUR EXIT 10
Freeway	FRWY, FWY	GN SYNDR FWY CLOSED/ DETOUR EXIT 15
Hazardous Materials	HAZMAT	HAZMAT IN ROADWAY/ ALL TRAF EXIT 25
Highway	HWY	ACCIDENT ON AA HWY/ EXPECT DELAYS
Hour	HR	ACCIDENT ON AA HWY/ 2 HR DELAY
Information	INFO	TRAF INFO TUNE TO 1240 AM
Interstate	I	E-BND I64 CLOSED/ DETOUR EXIT 20
Lane	LN	LN CLOSED MERGE LEFT
Left	LFT	LANE CLOSED MERGE LFT
Local	LOC	LOC TRAF USE ALT RTE
Maintenance	MAINT	MAINT WRK ON BRDG/ SLOW
Major	MAJ	MAJ DELAYS I75/ USE ALT RTE
Mile	MI	ACCIDENT 3 MI AHEAD/ USE ALT RTE
Minor	MNR	ACCIDENT 3 MI MNR DELAY
Minutes	MIN	ACCIDENT 3 MI/ 30 MIN DELAY
Northbound	N-BND	N-BND I75 CLOSED/ DETOUR EXIT 50
Oversized	OVRSZ	OVRSZ COMM VEH/ USE I275 NEXT RIGHT
Parking	PKING	EVENT PKING NEXT RGT
Parkway	PKWY	CUM PKWAY TRAF/ DETOUR EXIT 60
Prepare	PREP	ACCIDENT 3 MI/ PREP TO STOP
Right	RGT	EVENT PKING NEXT RGT
Road	RD	HAZMAT IN RD/ ALL TRAF EXIT 25
Roadwork	RDWK	RDWK NEXT 4 MI/ POSSIBLE DELAYS
Route	RTE	MAJ DELAYS I75/ USE ALT RTE
Shoulder	SHLDR	SHLDR CLOSED NEXT 5 MI
Slippery	SLIP	SLIP COND POSSIBLE/ SLOW SPD
Southbound	S-BND	S-BND I75 CLOSED/ DETOUR EXIT 50
Speed	SPD	SLIP COND POSSIBLE/ SLOW SPD

Standard Abbreviations (cont)

Word	Abbrev	Example
Street	ST	MAIN ST CLOSED/ USE ALT RTE
Traffic	TRAF	CUM PKWAY TRAF/ DETOUR EXIT 60
Vehicle	VEH	OVRSZ COMM VEH/ USE I275 NEXT RIGHT
Westbound	W-BND	W-BND I64 CLOSED/ DETOUR EXIT 50
Work	WRK	CONST WRK 2MI/ POSSIBLE DELAYS

Certain abbreviations are prone to inviting confusion because another word is abbreviated or could be abbreviated in the same way. DO NO USE THESE ABBREVIATIONS:

Abbrev	Intended Word	Word Erroneously Given
ACC	Accident	Access (Road)
CLRS	Clears	Colors
DLY	Delay	Daily
FDR	Feeder	Federal
L	Left	Lane (merge)
LOC	Local	Location
LT	Light (traffic)	Left
PARK	Parking	Park
POLL	Pollution (index)	Poll
RED	Reduce	Red
STAD	Stadium	Standard
TEMP	Temporary	Temperature
WRNG	Warning	Wrong

Typical Messages

The following is a list of typical messages used on CMS. The list consists of the reason or problem that you want the driver to be aware of and the action that you want the driver to take.

Reason/Problem	Action
ACCIDENT	ALL TRAFFIC EXIT RT
ACCIDENT/XX MILES	AVOID DELAY USE XX
XX ROAD CLOSED	CONSIDER ALT ROUTE
XX EXIT CLOSED	DETOUR
BRIDGE CLOSED	DETOUR XX MILES
BRIDGE/(SLIPPERY, ICE, ETC.)	DO NOT PASS
CENTER/LANE/CLOSED	EXPECT DELAYS
DELAY(S), MAJOR/DELAYS	FOLLOW ALT ROUTE
DEBRIS AHEAD	KEEP LEFT
DENSE FOG	KEEP RIGHT
DISABLED/VEHICLE	MERGE XX MILES
EMER/VEHICLES/ONLY	MERGE LEFT
EVENT PARKING	MERGE RIGHT
EXIT XX CLOSED	ONE-WAY TRAFFIC
FLAGGER XX MILES	PASS TO LEFT
FOG XX MILES	PASS TO RIGHT

Traffic Control Plan
Page 7 of 7

Typical Messages (cont)

Reason/Problem	**Action**
FREEWAY CLOSED	PREPARE TO STOP
FRESH OIL	REDUCE SPEED
HAZMAT SPILL	SLOW
ICE	SLOW DOWN
INCIDENT AHEAD	STAY IN LANE
LANES (NARROW, SHIFT, MERGE, ETC.)	STOP AHEAD
LEFT LANE CLOSED	STOP XX MILES
LEFT LANE NARROWS	TUNE RADIO 1610 AM
LEFT 2 LANES CLOSED	USE NN ROAD
LEFT SHOULDER CLOSED	USE CENTER LANE
LOOSE GRAVEL	USE DETOUR ROUTE
MEDIAN WORK XX MILES	USE LEFT TURN LANE
MOVING WORK ZONE, WORKERS IN ROADWAY	USE NEXT EXIT
NEXT EXIT CLOSED	USE RIGHT LANE
NO OVERSIZED LOADS	WATCH FOR FLAGGER
NO PASSING	
NO SHOULDER	
ONE LANE BRIDGE	
PEOPLE CROSSING	
RAMP CLOSED	
RAMP (SLIPPERY, ICE, ETC.)	
RIGHT LANE CLOSED	
RIGHT LANE NARROWS	
RIGHT SHOULDER CLOSED	
ROAD CLOSED	
ROAD CLOSED XX MILES	
ROAD (SLIPPERY, ICE, ETC.)	
ROAD WORK	
ROAD WORK (OR CONSTRUCTION) (TONIGHT, TODAY, TOMORROW, DATE)	
ROAD WORK XX MILES	
SHOULDER (SLIPPERY, ICE, SOFT, BLOCKED, ETC.)	
NEW SIGNAL XX MILES	
SLOW 1 (OR 2) - WAY TRAFFIC	
SOFT SHOULDER	
STALLED VEHICLES AHEAD	
TRAFFIC BACKUP	
TRAFFIC SLOWS	
TRUCK CROSSING	
TRUCKS ENTERING	
TOW TRUCK AHEAD	
UNEVEN LANES	
WATER ON ROAD	
WET PAINT	
WORK ZONE XX MILES	
WORKERS AHEAD	

Right-of-Way Certification Form

Revised 2/22/11

☑ Federal Funded ☑ Original

☐ State Funded ☐ Re-Certification

This form must be completed and submitted to FHWA with the PS&E package for federal-aid funded Interstate, Appalachia, and Major projects. This form shall also be submitted to FHWA for all federal-aid projects that fall under Conditions No. 2 or 3 outlined elsewhere in this form. When Condition No. 2 or 3 apply, KYTC shall resubmit this ROW Certification prior to construction contract Award. For all other federal-aid projects, this form shall be completed and retained in the KYTC project file.

Date: 12/18/2014

Project Name: NHS Guardrail ET Upgrades

Letting Date: March 20, 2015

Project #: FD52-023-0127-018-024

County: Casey

Item #: 8-933.00

Federal #:

Description of Project: Upgrade turn-down style guardrail end treatments from MP 18.946-23.715

Projects that require NO new or additional right-of-way acquisitions and/or relocations

☑ The proposed transportation improvement will be built within the existing rights-of -way and there are no properties to be acquired, individuals, families, and businesses ("relocatees") to be relocated, or improvements to be removed as a part of this project.

Projects that require new or additional right-of-way acquisitions and/or relocations

☐ Per 23 CFR 635.309, the KYTC hereby certify that all relocatees have been relocated to decent, safe, and sanitary housing or that KYTC has made available to relocatees adequate replacement housing in accordance with the provisions of the current FHWA directive(s) covering the administration of the Highway Relocation Assistance Program and that at least one of the following three conditions has been met. (Check those that apply.)

☐ **Condition 1.** All necessary rights-of-way, including control of access rights when applicable, have been acquired including legal and physical possession. Trial or appeal of cases may be pending in court but legal possession has been obtained. There may be some improvements remaining on the right-of-way, but all occupants have vacated the lands and improvements, and KYTC has physical possession and the rights to remove, salvage, or demolish all improvements and enter on all land. Fair market value has been paid or deposited with the court.

☐ **Condition 2.** Although all necessary rights-of-way have not been fully acquired, the right to occupy and to use all rights-of-way required for the proper execution of the project has been acquired. Trial or appeal of some parcels may be pending in court and on other parcels full legal possession has not been obtained, but right of entry has been obtained, the occupants of all lands and improvements have vacated, and KYTC has physical possession and right to remove, salvage, or demolish all improvements. Fair market value has been paid or deposited with the court for most parcels. Fair market value for all pending parcels will be paid or deposited with the court prior to AWARD of construction contract. (See note 1 below.)

Note 1: The KYTC shall re-submit a right-of-way certification form for this project prior to AWARD of **all** Federal-Aid construction contracts. Award must not to be made until after KYTC has obtained full legal possession and fair market value for all parcels has been paid or deposited with the court and FHWA has concurred in the re-submitted right-of-way certification.

Right-of-Way Certification Form

Revised 2/22/11

☐ **Condition 3.** The acquisition or right of occupancy and use of a few remaining parcels are not complete and/or some parcels still have occupants. However, all remaining occupants have had replacement housing made available to them in accordance with 49 CFR 24.204. The KYTC is hereby requesting authorization to advertise this project for bids and to proceed with bid letting even though the necessary rights-of-way will not be fully acquired, and/or some occupants will not be relocated, and/or the fair market value will not be paid or deposited with the court for some parcels until after bid letting. KYTC will fully meet all the requirements outlined in 23 CFR 635.309(c)(3) and 49 CFR 24.102(j) and will expedite completion of all acquisitions, relocations, and full payments after bid letting and prior to AWARD of the construction contract or force account construction. A full explanation and reason for this request, including identification of each such parcel and dates on which acquisitions, payments, and relocations will be completed, is attached to this certification form for FHWA concurrence. (See note 2.)

Note 2: The KYTC may request authorization on this basis only in unique and unusual circumstances. Proceeding to bid letting shall be the exception and never become the rule. In all cases, the KYTC shall make extraordinary efforts to expedite completion of the acquisition, payment for all affected parcels, and the relocation of all relocatees prior to AWARD of all Federal-Aid construction contracts or force account construction.

Approved: Charles Hale (Printed Name) — Charles Hale (Signature) — Right-of-Way Supervisor

Approved: (Printed Name) — (Signature) — 28 January 2015 — KYTC, Director of ROW &Utilities

Approved: (Printed Name) — No Signature Required as per FHWA - KYTC 2013 Stewardship Agreement (Signature) — FHWA, ROW Officer (when applicable)

Right-of-Way Certification Form

Revised 2/22/11

Date: 12/18/2014

Project Name: NHS Guardrail ET Upgrades
Project #: FD52-023-0127-018-024
Item #: 8-933.00
Letting Date: March 20, 2015

County: Casey
Federal #: _____

This project has 0 total number of parcels to be acquired, and 0 total number of individuals or families to be relocated, as well as 0 total number of businesses to be relocated.

0 Parcels where acquired by a signed fee simple deed and fair market value has been paid

0 Parcels have been acquired by IOJ through condemnation and fair market value has been deposited with the court

0 Parcels have not been acquired at this time (*explain below for each parcel*)

0 Parcels have been acquired or have a "right of entry" but fair market value has not been paid or has not been deposited with the court *(explain below for each parcel)*

0 Relocatees have not been relocated from parcels ____, ____, ____, ____, ____, ____, and ____ *(explain below for each parcel)*

Parcel #	Name/Station	Explanation for delayed acquisition, delayed relocation, or delayed payment of fair market value	Proposed date of payment or of relocation

There are 0 billboards and/or 0 cemeteries involved on this project.

There are 0 water or monitoring wells on parcels ____, ____, ____, ____, and ____. All have been acquired and are the responsibility of the project contractor to close/cap.

Form Effective Date: April 1, 2006
Last Revised: February 22, 2011

SPECIAL NOTES FOR UTILITY CLEARANCE

IMPACT ON CONSTRUCTION

CASEY COUNTY
HSIP 1271 (114), FD52 023 0127 018-024, FE01 023 0127 018-024
US 127 Guardrail and End Treatment Replacement
from KY 1552 (MP 18.946) to Casey/Lincoln Co. Line (MP 23.715)
SYP Item No. 8-933.00

GENERAL PROJECT NOTE ON UTILITY PROTECTION

The location of the guardrail project on US 127 in Casey county has no utility impact expected. *Utility coordination efforts determined that no significant utility relocation work is required to complete the project. Any work pertaining to these utility facilities is defined in the bid package and is to be carried out as instructed by the Kentucky Transportation Cabinet. The contractor will be responsible for any coordination or adjustments that are discussed or quantified in the proposal.*
Note: No railroads are within the project limits.

NOTE: DO NOT DISTURB ANY UTILITIES LOCATED WITHIN THE PROJECT DISTURB LIMITS

The Contractor is fully responsible for protection of all utilities

THE FOLLOWING COMPANIES ARE RELOCATING/ADJUSTING THEIR UTILITIES WITHIN THE PROJECT LIMITS AND WILL BE COMPLETE PRIOR TO CONSTRUCTION

N/A

THE FOLLOWING COMPANIES HAVE FACILITIES TO BE RELOCATED/ADJUSTED BY THE COMPANY OR THE COMPANY'S SUBCONTRACTOR AND IS TO BE COORDINATED WITH THE ROAD CONTRACT

N/A

THE FOLLOWING COMPANIES HAVE FACILITIES TO BE RELOCATED/ADJUSTED BY THE ROAD CONTRACTOR AS INCLUDED IN THIS CONTRACT

N/A

SPECIAL NOTES FOR UTILITY CLEARANCE

IMPACT ON CONSTRUCTION

CASEY COUNTY
HSIP 1271 (114), FD52 023 0127 018-024, FE01 023 0127 018-024
US 127 Guardrail and End Treatment Replacement
from KY 1552 (MP 18.946) to Casey/Lincoln Co. Line (MP 23.715)
SYP Item No. 8-933.00

SPECIAL CAUTION NOTE – PROTECTION OF UTILITIES

The contractor will be responsible for contacting all utility facility owners on the subject project to coordinate his activities. The contractor will coordinate his activities to minimize and, where possible, avoid conflicts with utility facilities. Due to the nature of the work proposed, it is unlikely to conflict with the existing utilities beyond minor facility adjustments. Where conflicts with utility facilities are unavoidable, the contractor will coordinate any necessary relocation work with the facility owner and Resident Engineer. The Kentucky Transportation Cabinet maintains the right to remove or alter portions of this contract if a utility conflict occurs.

The utility facilities as noted in the previous section(s) have been determined using data garnered by varied means and with varying degrees of accuracy: from the facility owners, a result of S.U.E., field inspections, and/or reviews of record drawings. The facilities defined may not be inclusive of all utilities in the project scope and are not Level A quality, unless specified as such. It is the contractor's responsibility to verify all utilities and their respective locations before excavating.

BEFORE YOU DIG

The contractor is instructed to call 1-800-752-6007 to reach KY 811, the one-call system for information on the location of existing underground utilities. The call is to be placed a minimum of two (2) and no more than ten (10) business days prior to excavation. The contractor should be aware that owners of underground facilities are not required to be members of the KY 811 one-call Before-U-Dig (BUD) service. The contractor must coordinate excavation with the utility owners, including those whom do not subscribe to KY 811. **It may be necessary for the contractor to contact the County Court Clerk to determine what utility companies have facilities in the area.**

Please Note: The information presented in this Utility Note is informational in nature and the information contained herein is not guaranteed.

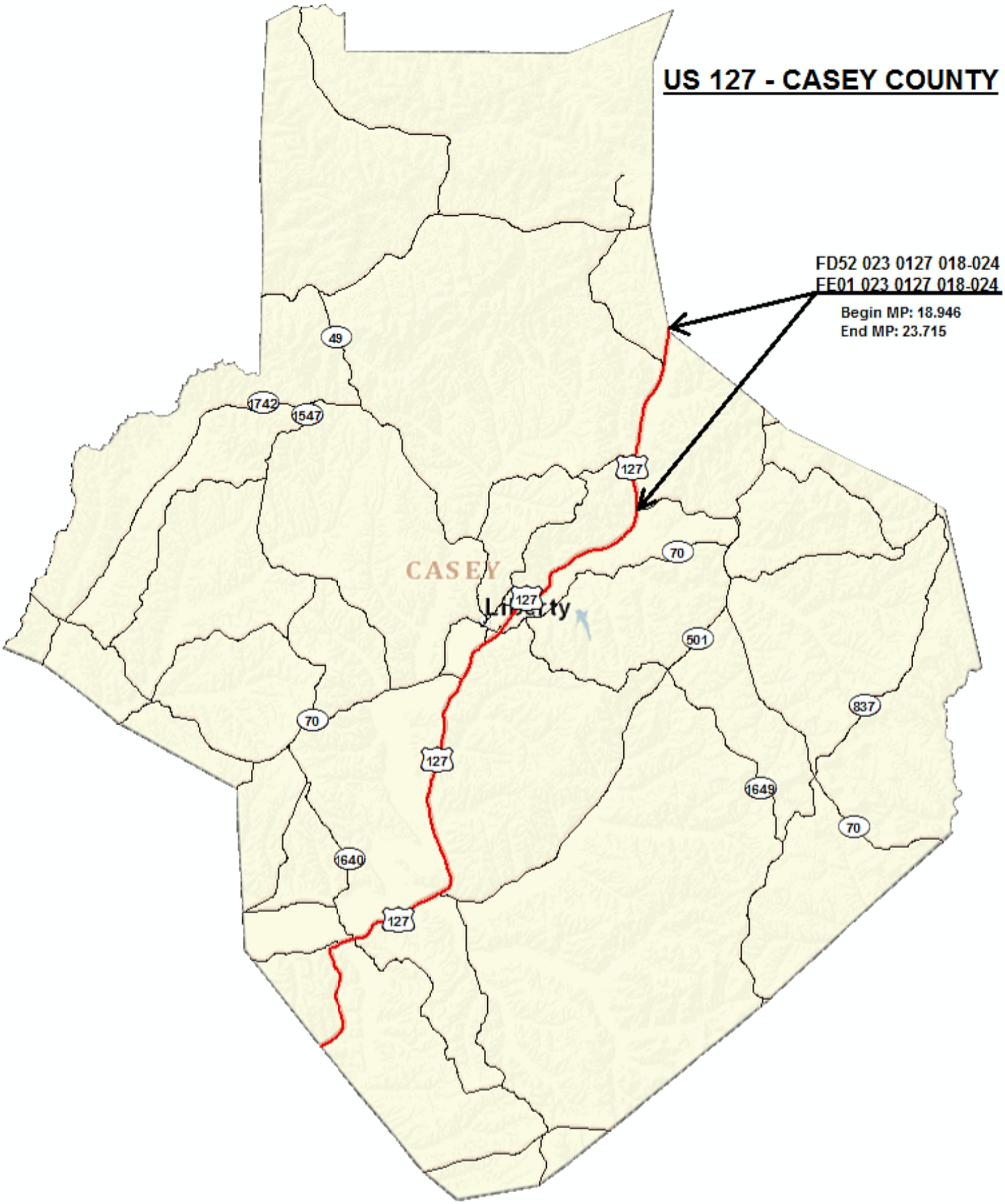
US 127 - CASEY COUNTY
FD52 023 0127 018-024
FE01 023 0127 018-024
Begin MP: 18.946
End MP: 23.715
49
1742
1547
127
70
CASEY
Liberty
501
837
1649
1640

MATERIAL SUMMARY

CONTRACT ID: 154208 **023GR15T004-HSIP & FE01** **0802301271502**

LIBERTY-HUSTONVILLE RD (US 127) FROM KY 1552 EXTENDING NORTH TO THE CASEY/LINCOLN COUNTY LINE GUARDRAIL, A DISTANCE OF 4.77 MILES.

Project Line No	Bid Code	DESCRIPTION	Quantity	Unit
0001	00001	DGA BASE	2,932.00	TON
0002	00100	ASPHALT SEAL AGGREGATE	513.00	TON
0003	00103	ASPHALT SEAL COAT	62.00	TON
0004	01987	DELINEATOR FOR GUARDRAIL BI DIRECTIONAL WHITE	250.00	EACH
0005	02355	GUARDRAIL-STEEL W BEAM-S FACE A	100.00	LF
0006	02360	GUARDRAIL TERMINAL SECTION NO 1	14.00	EACH
0007	02367	GUARDRAIL END TREATMENT TYPE 1	13.00	EACH
0008	02371	GUARDRAIL END TREATMENT TYPE 7	1.00	EACH
0009	02381	REMOVE GUARDRAIL	8,675.00	LF
0010	02562	TEMPORARY SIGNS	150.00	SQFT
0011	02650	MAINTAIN & CONTROL TRAFFIC - (CASEY CO. US 127)	1.00	LS
0012	20629NS719	THRIE BEAM TO W BEAM CONNECTOR	4.00	EACH
0013	21380ES719	GUARDRAIL THRIE BEAM	62.50	LF
0014	21802EN	G/R STEEL W BEAM-S FACE (7 FT POST)	9,512.50	LF
0015	02569	DEMOBILIZATION	1.00	LS

CONTRACT ID: 154208 **023GR15T004-HSIP & FE01** **0802301271504**

LIBERTY-HUSTONVILLE RD (US 127) FROM KY 1552 EXTENDING NORTH TO THE CASEY/LINCOLN COUNTY LINE GUARDRAIL, A DISTANCE OF 4.77 MILES.

Project Line No	Bid Code	DESCRIPTION	Quantity	Unit
0016	02360	GUARDRAIL TERMINAL SECTION NO 1	20.00	EACH
0017	02381	REMOVE GUARDRAIL	4,437.50	LF
0018	21802EN	G/R STEEL W BEAM-S FACE (7 FT POST)	4,602.50	LF
0019	02569	DEMOBILIZATION	1.00	LS

Casey County US 127 MP 18.946 - 23.715 - Guardrail Summary

NEW GUARDRAIL								REMOVE GUARDRAIL						
LANE	END TREAT.	BEGIN MILEPOINT	END MILEPOINT	END TREAT.	LIN FEET	NO. OF RADIUS RAIL	REMARKS	LANE	END TREAT.	BEGIN MILEPOINT	END MILEPOINT	END TREAT.	LIN FEET	REMARKS
NB	Terminal Section 1	19.210	19.284	Terminal Section 1	415.0	4	Extend End MP approx. 137.5' North to Entrance and use Term. Sect. 1	NB	Terminal Section 1	19.210	19.258	Type 3	262.5	
NB	Type 1	19.377	19.480	Type 1	450.0			NB	Type 4	19.377	19.480	Type 7	550.0	
NB	Terminal Section 1	19.489	19.659	Terminal Section 1	915.0	4	Extend End MP approx. 112.5' North to Entrance and use Term. Sect. 1	NB	Terminal Section 1	19.489	19.638	Type 4	787.5	
NB	Terminal Section 1	19.662	19.725	Terminal Section 1	352.5	4		NB	Terminal Section 1	19.662	19.725	Terminal Section 1	337.5	
NB	Type 1	19.827	19.894	Terminal Section 1	320.0	2		NB	Type 4	19.827	19.894	Terminal Section 1	362.5	
NB	Terminal Section 1	19.981	20.063	Terminal Section 1	452.5	4		NB	Terminal Section 1	19.981	20.063	Terminal Section 1	437.5	
NB	Terminal Section 1	20.091	20.192	Terminal Section 1	552.5	4		NB	Terminal Section 1	20.091	20.192	Terminal Section 1	537.5	
NB	Terminal Section 1	20.416	20.551	Terminal Section 1	740.0	4		NB	Terminal Section 1	20.416	20.551	Terminal Section 1	725.0	
NB	Terminal Section 1	21.268	21.677	Type 1	2,120.0	2	Remove Existing Type 3s at MPs 21.426 & 21.449 and connect into one string of rail Extend End MP approx. 125' North due to Length of Need/Recovery Area for proposed ET Type 1	NB	Terminal Section 1	21.268	21.426	Type 3	837.5	
								NB	Type 3	21.449	21.653	Type 3	1,087.5	
NB	Tie to Rail on Patsy Riffe Ridge Rd	21.747	21.858	Terminal Section 1	595.0	2		NB	Ties to Rail on Patsy Riffe Ridge Rd	21.747	21.858	Terminal Section 1	587.5	
NB	Type 1	21.919	22.064	Terminal Section 1	732.5	2	Extend Beg. MP approx. 100' South due to Length of Need/Recovery Area for proposed ET Type 1	NB	Type 4	21.938	22.064	Terminal Section 1	675.0	
NB	Type 1	22.322	22.433	Type 1	487.5		Extend End MP approx. 75' North due to Length of Need/Recovery Area for proposed ET Type 1	NB	Type 4	22.322	22.419	Type 4	512.5	
NB	Terminal Section 1	22.451	22.461	Terminal Section 1	81.25	5		NB	Terminal Section 1	22.451	22.461	Terminal Section 1	62.5	
NB	Terminal Section 1	22.755	22.792	Connect to Thrie Beam	207.5	2	Extend Beg. MP approx. 75' South to Entrance and use Term. Sect. 1 25 FT of Single Face A	NB	Terminal Section 1	22.769	22.795	Connect Type C	137.5	
NB		22.792	22.800		31.25		Bridge Rail - Thrie Beam Retrofit. See Detail Sheets. 2 Thrie Beam to "W" Beam Connectors	NB					0.0	
NB	Connect to Thrie Beam	22.800	22.810	Type 7	73.75	3	25 FT of Single Face A Type 7 on Kidds Store Loop Rd (gravel road)	NB	Connect Type C	22.798	22.809	Terminal Section 1	62.5	
NB	Type 1	23.514	23.636	Terminal Section 1	607.5	2		NB	Type 2A	23.514	23.636	Terminal Section 1	650.0	
NB	Terminal Section 1	23.640	23.710	Tie to Rail on Green Valley Rd	386.25	3	Extend Beg. MP approx. 50' South to Entrance and use Term. Sect. 1	NB	Type 3	23.650	23.710	Ties to Rail on Green Valley Rd	325.0	
SB	Terminal Section 1	23.635	23.578	Tie to Rail on Carpenter Creek Rd	331.25	5		SB	Terminal Section 1	23.635	23.578	Ties to Rail on Carpenter Creek Rd	312.5	

Casey County US 127 MP 18.946 - 23.715 - Guardrail Summary

NEW GUARDRAIL								REMOVE GUARDRAIL						
LANE	END TREAT.	BEGIN MILEPOINT	END MILEPOINT	END TREAT.	LIN FEET	NO. OF RADIUS RAIL	REMARKS	LANE	END TREAT.	BEGIN MILEPOINT	END MILEPOINT	END TREAT.	LIN FEET	REMARKS
SB	Tie to Rail along entrance	23.337	23.291	Type 1	311.25	3	Extend End MP approx. 75' South due to Length of Need/Recovery Area for proposed ET Type 1	SB	Ties to Rail along entrance	23.337	23.305	Type 3	225.0	
SB	Tie to Rail on KY 906	22.818	22.808	Connect to Thrie Beam	70.0	2	25 FT of Single Face A	SB	Ties to Rail on KY 906	22.818	22.806	Connect Type C	75.0	
SB		22.808	22.800		31.25		Bridge Rail - Thrie Beam Retrofit. See Detail Sheets. 2 Thrie Beam to "W" Beam Connectors	SB					0.0	
SB	Connect to Thrie Beam	22.800	22.790	Terminal Section 1	70.0	2	25 FT of Single Face A	SB	Connect Type C	22.802	22.792	Terminal Section 1	62.5	
SB	Terminal Section 1	22.449	22.324	Type 1	620.0	2	Extend End MP approx. 175' South due to Length of Need/Recovery Area for proposed ET Type 1	SB	Terminal Section 1	22.449	22.358	Type 2A	487.5	
SB	Terminal Section 1	21.847	21.730	Type 1	582.5	2	Extend End MP approx. 50' South due to Length of Need/Recovery Area for proposed ET Type 1	SB	Terminal Section 1	21.847	21.740	Type 3	575.0	
SB	Terminal Section 1	20.562	20.417	Terminal Section 1	790.0	4		SB	Terminal Section 1	20.562	20.417	Terminal Section 1	775.0	
SB	Type 1	20.242	20.106	Tie to Rail on KY 1552	686.25	3	Extend Beg. MP approx. 150' North due to Length of Need/Recovery Area for proposed ET Type 1	SB	Type 3	20.213	20.106	Ties to Rail on KY 1552	575.0	
SB	Terminal Section 1	20.039	19.998	Terminal Section 1	240.0	4		SB	Terminal Section 1	20.039	19.998	Terminal Section 1	225.0	
SB	Terminal Section 1	19.933	19.873	Terminal Section 1	340.0	4		SB	Terminal Section 1	19.933	19.873	Terminal Section 1	325.0	
SB	Terminal Section 1	19.722	19.702	Terminal Section 1	127.5	4		SB	Terminal Section 1	19.722	19.702	Terminal Section 1	112.5	
SB	Terminal Section 1	19.117	19.004	Type 1	557.5	2	Extend End MP approx. 175' South due to Length of Need/Recovery Area for proposed ET Type 1	SB	Terminal Section 1	19.117	19.037	Type 3	425.0	
				Total =	**14,277.5**							**Total =**	**13,112.5**	

62.5	Guardrail Thrie Beam
100.0	Guardrail - Single Face A
4,602.50	GR Steel W Beam S-Face (7 FT Post) - Paid with FE01 Funds
9,512.50	GR Steel W Beam S-Face (7 FT Post) - Paid with FD52 HSIP Funds

Remove Guardrail - Paid with FE01 Funds	4437.5
Remove Guardrail - Pd with FD52 HSIP Funds	8675.0

	Summary	Totals:
	End Treatment Type 1	13
	End Treatment Type 7	1
	Delineator for Guardrail B/W	250
	DGA (under G-Rail)	2932
	Asphalt Seal Aggregate	513
	Asphalt Seal Coat	62
	Thrie Beam to "W" Beam Connector	4
	Terminal Section No. 1	14
Paid with FE01 Funds	Terminal Section No. 1	20

*** HIGHLIGHTED TO BE PAID WITH FED01 FUNDS**

TYPICAL SECTIONS
CASEY COUNTY - US 127
FD52 023 0127 018-024
FE01 023 0127 018-024

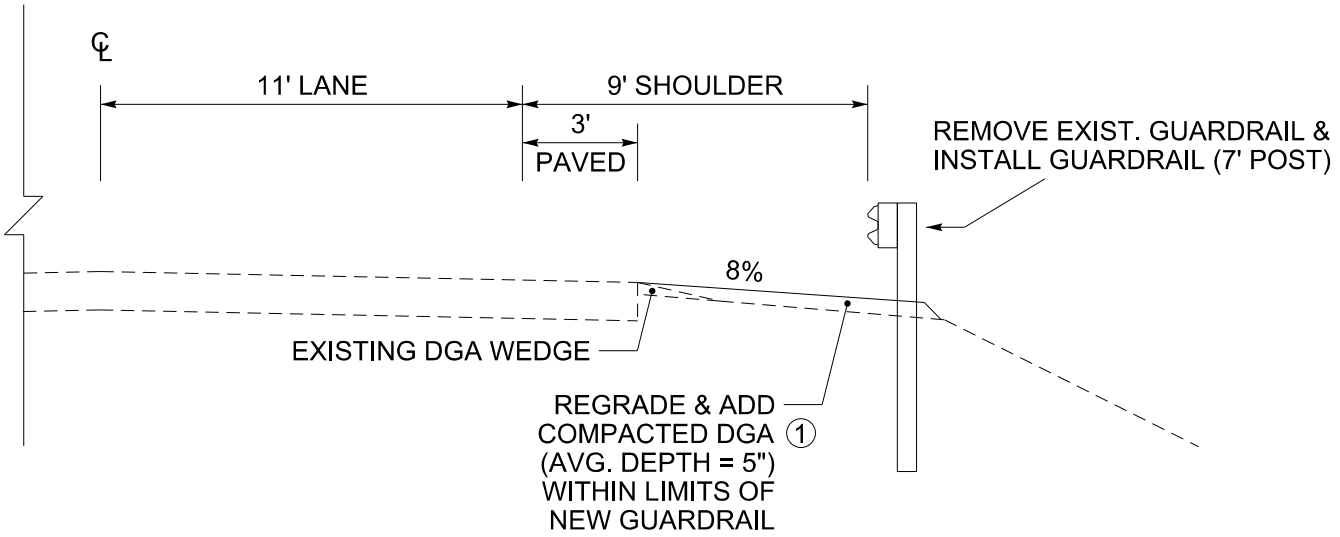

PROPOSED GUARDRAIL
TYPICAL SECTION
MP 18.946 - 22.94
(SYMMETRICAL ABOUT CL)

① APPLY DOUBLE ASPHALT SEAL COAT TO ALL DGA PLACED WITH THIS PROJECT, AS WELL AS THE EXISTING DGA WEDGE THAT WILL REMAIN BETWEEN THE LIMITS OF NEW GUARDRAIL

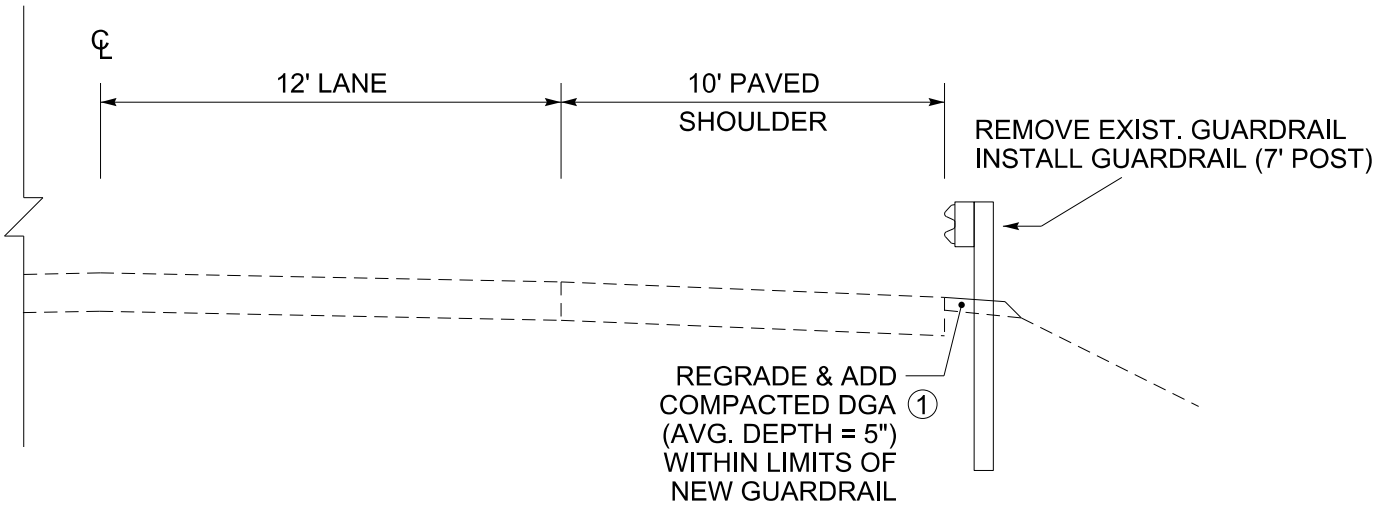

PROPOSED GUARDRAIL
TYPICAL SECTION
MP 22.94 - 23.715
(SYMMETRICAL ABOUT CL)

* SEE GUARDRAIL SUMMARY FOR APPROXIMATE MP LIMITS OF PROPOSED GUARDRAIL

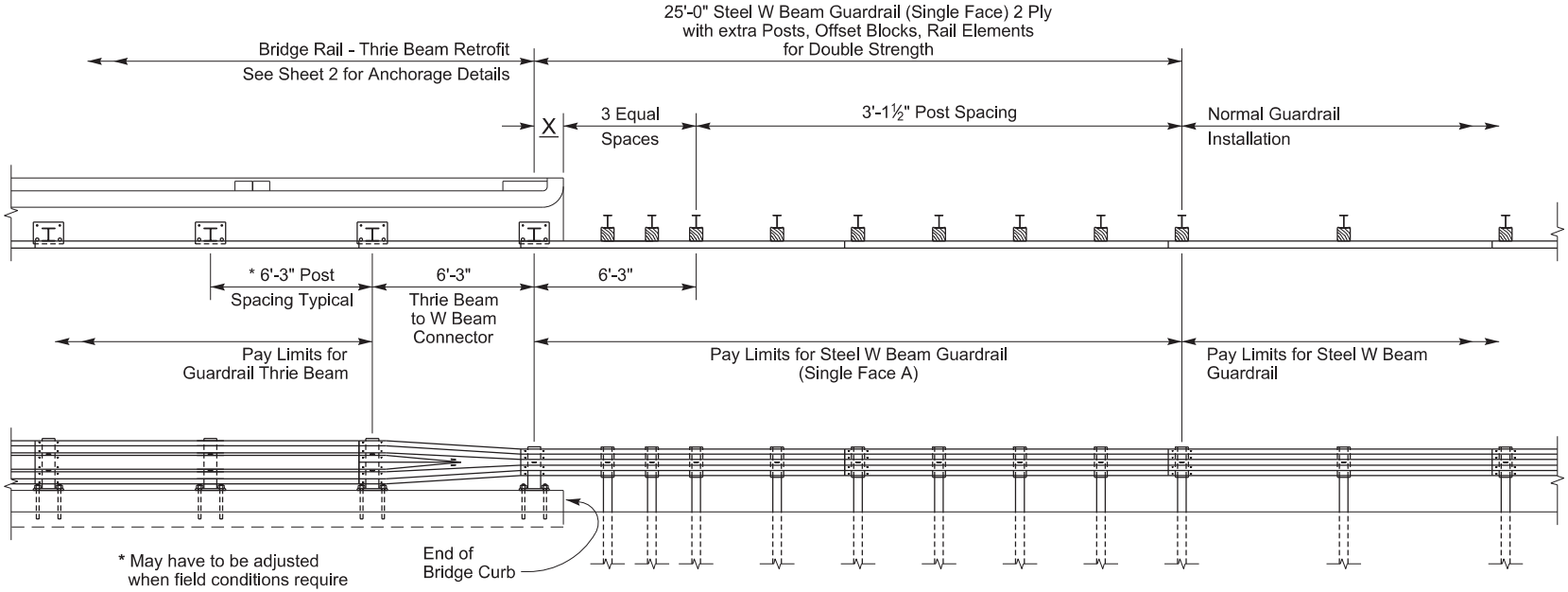

① Existing Bridge Length ≈ 46 FT - Using X ≈ 1'-1½" should leave 7 Spaces @ 6'-3" (43'-9")
-2 Spaces (the first and last spaces on each end of bridge) will have the Thrie Beam to W Beam Connector
-5 Spaces @ 6'-3" (31'-3") will have the Guardrail Thrie Beam

① ADJUST X BASED ON ACTUAL LENGTH OF BRIDGE

BID ITEMS AND UNIT TO BID:
- GUARDRAIL THRIE BEAM - LF
- THRIE BEAM TO W BEAM CONNECTOR - EACH
- GUARDRAIL-STEEL W BEAM-S FACE A - LF

PAYMENT AT THE UNIT BID PRICES SHALL INCLUDE ALL MATERIALS, TOOLS, LABOR, AND INCIDENTALS NEEDED TO COMPLETE THE WORK AS SHOWN IN THESE DETAILS AND ACCORDING TO THE PROPOSAL NOTES.

DIMENSIONAL TOLERANCES NOT SHOWN OR IMPLIED ARE INTENDED TO BE THOSE CONSISTENT WITH THE PROPER FUNCTIONING OF THE PART, INCLUDING ITS APPEARANCE AND ACCEPTED MANUFACTURING PRACTICES. THE SAME TYPE OF RAIL ELEMENT, POST, FASTENINGS AND ACCESSORIES SHALL BE USED THROUGHOUT THE WORK.

IF REINFORCING IS ENCOUNTERED DURING DRILLING FOR ANCHORS, GROUT AND MAKE APPROPRIATE ADJUSTMENTS.

GUARDRAIL THRIE BEAM: This item includes the Thrie Beam guardrail, guardrail posts and base plates, hardware, labor, and incidentals necessary to properly install the thrie beam guardrail along the existing bridge structure. For thrie beam guardrail components, refer to Standard Drawing RBR-100.

THRIE BEAM TO W BEAM CONNECTOR: This item includes the Thrie Beam to W Beam Connector, guardrail posts and base plates, hardware, labor, and incidentals necessary to properly install the connector between the Thrie Beam and W-Beam guadrail. For details on the Thrie Beam to W Beam Connector refer to the Sepia Drawing for Guardrail Components.

GUARDRAIL-STEEL W BEAM (SINGLE FACE A): This item includes the W-Beam guardrail (2 ply for extra strength), guardrail posts, offset blocks, hardware, labor, and incidentals necessary to properly install the approach guardrail within the 25'-0" limits at each corner of the structure. For guardrail components, refer to the Sepia Drawings for Steel Beam Guardrail ("W" Beam), Guardrail Components, and Guardrail Posts.

THE DIMENSIONS SHOWN IN THESE DETAILS ARE BASED ON ORIGINAL CONSTRUCTION RECORDS. THE EXISTING BRIDGE DIMENSIONS, ESPECIALLY THE CURB HEIGHT AND CURB LENGTH, SHALL BE MEASURED IN THE FIELD BY THE CONTRACTOR PRIOR TO THE FABRICATION OF ANY COMPONENTS.

Detail Sheet 1 of 2	BRIDGE RAIL - THRIE BEAM RETROFIT	COUNTY:	Casey
		ROUTE:	US 127
		CROSSING:	Frey Creek

TYPICAL STEEL POST ANCHORAGE

PROJECT TOTAL OF APPROXIMATELY 16 POSTS REQUIRED

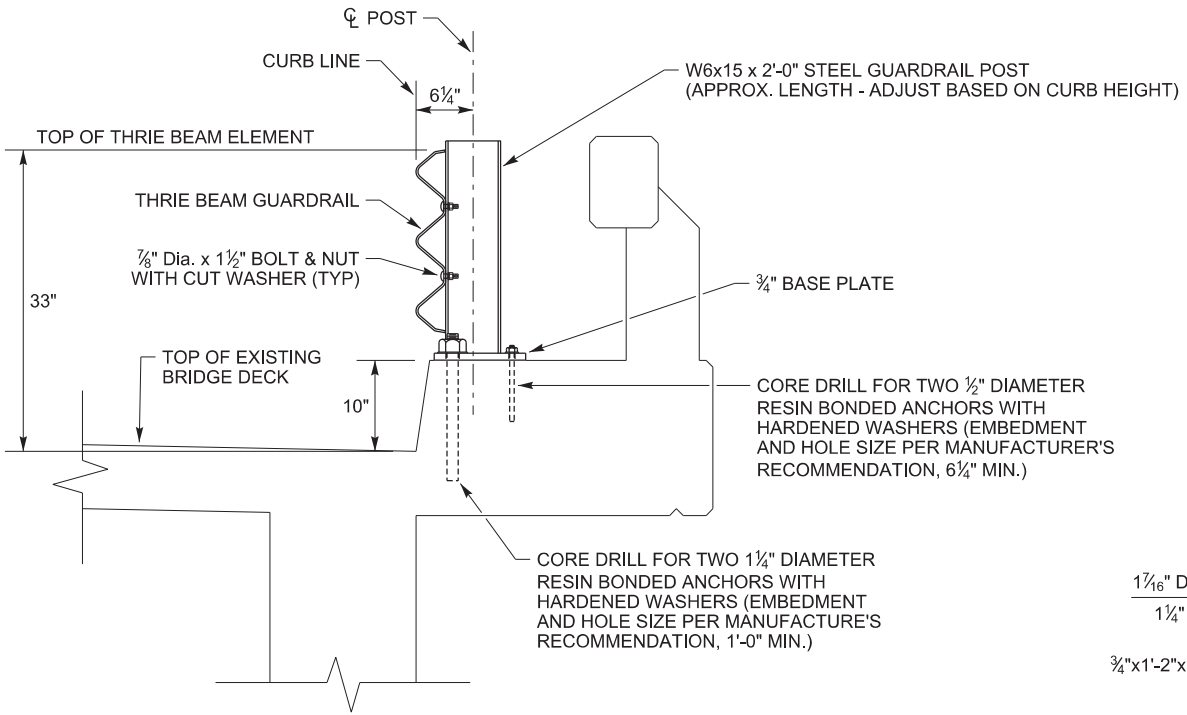

BASE PLATE DETAIL

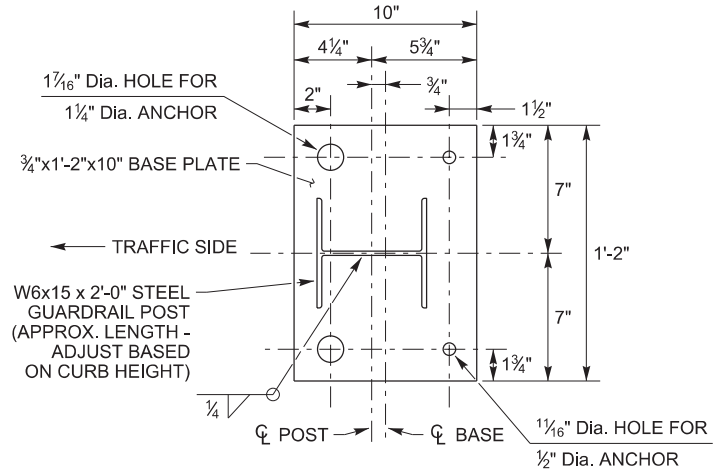

GENERAL NOTES:

1. ALL MATERIAL, LABOR, AND WORKMANSHIP SHALL BE IN ACCORDANCE WITH THE REQUIREMENTS OF THE KENTUCKY TRANSPORTATION CABINET STANDARD SPECIFICATIONS FOR ROAD AND BRIDGE CONSTRUCTION, CURRENT EDITION.

2. MATERIAL SPECIFICATIONS:
STEEL SHAPES AND PLATES: ASTM A 36 OR ASTM A 992
BOLTS, NUTS, AND WASHERS (UNLESS OTHERWISE NOTED): ASTM A 307 AND STD. SPEC. SECT. 813.09
RESIN BONDED ANCHORS (ALL THREAD): ASTM A 193 GRADE B7, OR ASTM A 449

3. ALL STEEL POSTS AND PLATES SHALL BE GALVANIZED IN ACCORDANCE WITH AASHTO M 111 AFTER FABRICATION. BOLTS AND HARDWARE SHALL BE GALVANIZED IN ACCORDANCE WITH AASHTO M 232.

4. ALL BOLT HOLES SHALL BE 3/16" LARGER THAN THE BOLT DIAMETER UNLESS OTHERWISE SPECIFIED. USE TEMPLATE TO LOCATE HOLES IN CONCRETE. BOLT LENGTHS NOT SHOWN SHALL BE SIZED TO PROVIDE A ¼" MIN. OF THREAD EXPOSED BEYOND THE NUT.

5. THE DIMENSIONS SHOWN IN THESE DETAILS ARE BASED ON ORIGINAL CONSTRUCTION RECORDS. THE EXISTING BRIDGE DIMENSIONS, ESPECIALLY THE CURB HEIGHT AND CURB LENGTH, SHALL BE MEASURED IN THE FIELD BY THE CONTRACTOR PRIOR TO THE FABRICATION OF ANY COMPONENTS.

Detail Sheet 2 of 2	BRIDGE RAIL - THRIE BEAM RETROFIT	COUNTY:	Casey
		ROUTE:	US 127
		CROSSING:	Frey Creek

GUARDRAIL DELIVERY VERIFICATION SHEET

Contract Id: _____ **Contractor:** _____

Section Engineer: _____ **District & County:** _____

DESCRIPTION	UNIT	QTY LEAVING PROJECT	QTY RECEIVED@BB YARD
GUARDRAIL (Includes End treatments & crash cushions)	LF	_____	_____
STEEL POSTS	EACH	_____	_____
STEEL BLOCKS	EACH	_____	_____
WOOD OFFSET BLOCKS	EACH	_____	_____
BACK UP PLATES	EACH	_____	_____
CRASH CUSHION	EACH	_____	_____
NUTS, BOLTS, WASHERS	BAG/BCKT	_____	_____
DAMAGED RAIL TO MAINT. FACILITY	LF	_____	_____
DAMAGED POSTS TO MAINT. FACILITY	EACH	_____	_____

****Required Signatures before Leaving Project Site***

Printed Section Engineer's Representative_____ & Date_____

Signature Section Engineer's Representative_____& Date_____

Printed Contractor's Representative_____& Date_____

Signature Contractor's Representative_____& Date_____

****Required Signatures after Arrival at Bailey Bridge Yard (All material on truck must be counted & the quantity received column completed before signatures)***

Printed Bailey Bridge Yard Representative_____ & Date_____

Signature Bailey Bridge Yard Representative_____& Date_____

Printed Contractor's Representative_____& Date_____

Signature Contractor's Representative_____& Date_____

**Payment for the bid item remove guardrail will be based upon the quantities shown in the Bailey Bridge Yard received column. Payment will not be made for guardrail removal until the guardrail verification sheets are electronically submitted to the Section Engineer by the Bailey Bridge Yard Representative.

Completed Form Submitted to Section Engineer Date: _____ By: _____

PART II

SPECIFICATIONS AND STANDARD DRAWINGS

SPECIFICATIONS REFERENCE

Any reference in the plans or proposal to previous editions of the *Standard Specifications for Road and Bridge Construction* and *Standard Drawings* are superseded by *Standard Specifications for Road and Bridge Construction, Edition of 2012* and *Standard Drawings, Edition of 2012 with the 2012 Revision.*

Supplemental Specifications to the Standard Specifications for Road and Bridge Construction, 2012 Edition Effective with the August 22, 2014 Letting

Subsection: **Revision:**	102.15 Process Agent. Replace the 1st paragraph with the following: Every corporation doing business with the Department shall submit evidence of compliance with KRS Sections 14A.4-010, 271B.11-010, 271B.11-070, 271B.11-080, 271B.5-010 and 271B.16-220, and file with the Department the name and address of the process agent upon whom process may be served.
Subsection: **Revision:**	105.13 Claims Resolution Process. Delete all references to TC 63-34 and TC 63-44 from the subsection as these forms are no longer available through the forms library and are forms generated within the AASHTO SiteManager software.
Subsection: **Revision:**	108.03 Preconstruction Conference. Replace 8) Staking with the following: 8) Staking (designated by a Professional Engineer or Land Surveyor licensed in the Commonwealth of Kentucky.
Subsection: **Revision:**	109.07.02 Fuel. Revise item Crushed Aggregate Used for Embankment Stabilization to the following: Crushed Aggregate Used for Stabilization of Unsuitable Materials Used for Embankment Stabilization
	Delete the following item from the table. ~~Crushed Sandstone Base (Cement Treated)~~
Subsection: **Revision:**	110.02 Demobilization. Replace the first part of the first sentence of the second paragraph with the following: Perform all work and operations necessary to accomplish final clean-up as specified in the first paragraph of Subsection 105.12;
Subsection: **Revision:**	112.03.12 Project Traffic Coordinator (PTC). Replace the last paragraph of this subsection with the following: Ensure the designated PTC has sufficient skill and experience to properly perform the task assigned and has successfully completed the qualification courses.
Subsection: **Revision:**	112.04.18 Diversions (By-Pass Detours). Insert the following sentence after the 2nd sentence of this subsection. The Department will not measure temporary drainage structures for payment when the contract documents provide the required drainage opening that must be maintained with the diversion. The temporary drainage structures shall be incidental to the construction of the diversion. If the contract documents fail to provide the required drainage opening needed for the diversion, the cost of the temporary drainage structure will be handled as extra work in accordance with section 109.04.
Subsection: **Revision:**	201.03.01 Contractor Staking. Replace the first paragraph with the following: Perform all necessary surveying under the general supervision of a Professional Engineer or Land Surveyor licensed in the Commonwealth of Kentucky.

Supplemental Specifications to the
Standard Specifications for Road and Bridge Construction, 2012 Edition
Effective with the August 22, 2014 Letting

Subsection: **Revision:**	201.04.01 Contractor Staking. Replace the last sentence of the paragraph with the following: Complete the general layout of the project under the supervision of a Professional Engineer or Land Surveyor licensed in the Commonwealth of Kentucky.
Subsection: **Revision:**	206.04.01 Embankment-in-Place. Replace the fourth paragraph with the following: The Department will not measure **suitable** excavation included in the original plans that is disposed of for payment and will consider it incidental to Embankment-in-Place.
Subsection: **Revision:**	208.02.01 Cement. Replace paragraph with the following: Select Type I or Type II cement conforming to Section 801. Use the same type cement throughout the work.
Subsection: **Revision:**	208.03.06 Curing and Protection. Replace the fourth paragraph with the following: Do not allow traffic or equipment on the finished surface until the stabilized subgrade has cured for a total of 7-days with an ambient air temperature above 40 degrees Fahrenheit. A curing day consists of a continuous 24-hour period in which the ambient air temperature does not fall below 40 degrees Fahrenheit. Curing days will not be calculated consecutively, but must total seven (7) , 24-hour days with the ambient air temperature remaining at or above 40 degrees Fahrenheit before traffic or equipment will be allowed to traverse the stabilized subgrade. The Department may allow a shortened curing period when the Contractor requests. The Contractor shall give the Department at least 3 day notice of the request for a shortened curing period. The Department will require a minimum of 3 curing days after final compaction. The Contractor shall furnish cores to the treated depth of the roadbed at 500 feet intervals for each lane when a shortened curing time is requested. The Department will test cores using an unconfined compression test. Roadbed cores must achieve a minimum strength requirement of 80 psi.
Subsection: **Revision:**	208.03.06 Curing and Protection. Replace paragraph eight with the following: At no expense to the Department, repair any damage to the subgrade caused by freezing.
Subsection: **Part:** **Revision:**	212.03.03 Permanent Seeding and Protection. A) Seed Mixtures for Permanent Seeding. Revise **Seed Mix Type I** to the mixture shown below: 50% Kentucky 31 Tall Fescue (Festuca arundinacea) 35% Hard Fescue (Festuca (Festuca longifolia) 10% Ryegrass, Perennial (Lolium perenne) 5% White Dutch Clover (Trifolium repens)
Subsection: **Part:** **Number:** **Revision:**	212.03.03 Permanent Seeding and Protection. A) Seed Mixtures for Permanent Seeding. 2) Replace the paragraph with the following: Permanent Seeding on Slopes Greater than 3:1 in Highway Districts 4, 5, 6, and 7. Apply seed mix Type II at a minimum application rate of 100 pounds per acre. If adjacent to a golf course replace the crown vetch with Kentucky 31 Tall Fescue.

Supplemental Specifications to the
Standard Specifications for Road and Bridge Construction, 2012 Edition
Effective with the August 22, 2014 Letting

Subsection: **Part:** **Number:** **Revision:**	212.03.03 Permanent Seeding and Protection. A) Seed Mixtures for Permanent Seeding. 3) Replace the paragraph with the following: Permanent Seeding on Slopes Greater than 3:1 in Highway Districts 1, 2, 3, 8, 9, 10, 11, and 12. Apply seed mix Type III at a minimum application rate of 100 pounds per acre. If adjacent to crop land or golf course, replace the Sericea Lespedeza with Kentucky 31 Fescue.
Subsection: **Part:** **Revision:**	212.03.03 Permanent Seeding and Protection. B) Procedures for Permanent Seeding. Delete the first sentence of the section.
Subsection: **Part:** **Revision:**	212.03.03 Permanent Seeding and Protection. B) Procedures for Permanent Seeding. Replace the second and third sentence of the section with the following: Prepare a seedbed and apply an initial fertilizer that contains a minimum of 100 pounds of nitrogen, 100 pounds of phosphate, and 100 pounds of potash per acre. Apply agricultural limestone to the seedbed when the Engineer determines it is needed. When required, place agricultural limestone at a rate of 3 tons per acre.
Subsection: **Part:** **Revision:**	212.03.03 Permanent Seeding and Protection. D) Top Dressing. Change the title of part to D) Fertilizer.
Subsection: **Part:** **Revision:**	212.03.03 Permanent Seeding and Protection. D) Fertilizer. Replace the first paragraph with the following: Apply fertilizer at the beginning of the seeding operation and after vegetation is established. Use fertilizer delivered to the project in bags or bulk. Apply initial fertilizer to all areas prior to the seeding or sodding operation at the application rate specified in 212.03.03 B). Apply 20-10-10 fertilizer to the areas after vegetation has been established at a rate of 11.5 pounds per 1,000 square feet. Obtain approval from the Engineer prior to the 2nd fertilizer application. Reapply fertilizer to any area that has a streaked appearance. The reapplication shall be at no additional cost to the Department. Re-establish any vegetation severely damaged or destroyed because of an excessive application of fertilizer at no cost to the Department.
Subsection: **Part:** **Revision:**	212.03.03 Permanent Seeding and Protection. D) Fertilizer. Delete the second paragraph.
Subsection: **Revision:**	212.04.04 Agricultural Limestone. Replace the entire section with the following: The Department will measure the quantity of agricultural limestone in tons.
Subsection: **Revision:**	212.04.05 Fertilizer. Replace the entire section with the following: The Department will measure fertilizer used in the seeding or sodding operations for payment. The Department will measure the quantity by tons.

Supplemental Specifications to the
Standard Specifications for Road and Bridge Construction, 2012 Edition
Effective with the August 22, 2014 Letting

Subsection:	212.05 PAYMENT.
Revision:	Delete the following item code: Code — Pay Item — Pay Unit 05966 — Topdressing Fertilizer — Ton
Subsection:	212.05 PAYMENT.
Revision:	Add the following pay items: Code — Pay Item — Pay Unit 05963 — Initial Fertilizer — Ton 05964 — 20-10-10 Fertilizer — Ton 05992 — Agricultural Limestone — Ton
Subsection:	213.03.02 Progress Requirements.
Revision:	Replace the last sentence of the third paragraph with the following: Additionally, the Department will apply a penalty equal to the liquidated damages when all aspects of the work are not coordinated in an acceptable manner within 7 calendar days after written notification.
Subsection:	213.03.05 Temporary Control Measures.
Part:	E) Temporary Seeding and Protection.
Revision:	Delete the second sentence of the first paragraph.
Subsection:	304.02.01 Physical Properties.
Table:	Required Geogrid Properties
Revision:	Replace all references to Test Method "GRI-GG2-87" with ASTM D 7737.
Subsection:	402.03.02 Contractor Quality Control and Department Acceptance.
Part:	B) Sampling.
Revision:	Replace the second sentence with the following: The Department will determine when to obtain the quality control samples using the random-number feature of the mix design submittal and approval spreadsheet. The Department will randomly determine when to obtain the verification samples required in Subsections 402.03.03 and 402.03.04 using the Asphalt Mixture Sample Random Tonnage Generator.
Subsection:	402.03.02 Contractor Quality Control and Department Acceptance.
Part:	D) Testing Responsibilities.
Number:	3) VMA.
Revision:	Add the following paragraph below Number 3) VMA: Retain the AV/VMA specimens and one additional corresponding G_{mm} sample for 5 working days for mixture verification testing by the Department. For Specialty Mixtures, retain a mixture sample for 5 working days for mixture verification testing by the Department. When the Department's test results do not verify that the Contractor's quality control test results are within the acceptable tolerances according to Subsection 402.03.03, retain the samples and specimens from the affected sublot(s) for the duration of the project.
Subsection:	402.03.02 Contractor Quality Control and Department Acceptance.
Part:	D) Testing Responsibilities.
Number:	4) Density.
Revision:	Replace the second sentence of the Option A paragraph with the following: Perform coring by the end of the following work day.

Supplemental Specifications to the
Standard Specifications for Road and Bridge Construction, 2012 Edition
Effective with the August 22, 2014 Letting

Subsection: **Part:** **Number:** **Revision:**	402.03.02 Contractor Quality Control and Department Acceptance. D) Testing Responsibilities. 5) Gradation. Delete the second paragraph.
Subsection: **Part:** **Number:** **Revision:**	402.03.02 Contractor Quality Control and Department Acceptance. H) Unsatisfactory Work. 1) Based on Lab Data. Replace the second paragraph with the following: When the Engineer determines that safety concerns or other considerations prohibit an immediate shutdown, continue work and the Department will make an evaluation of acceptability according to Subsection 402.03.05.
Subsection: **Revision:**	402.03.03 Verification. Replace the first paragraph with the following: **402.03.03 Mixture Verification.** For volumetric properties, the Department will perform a minimum of one verification test for AC, AV, and VMA according to the corresponding procedures as given in Subsection 402.03.02. The Department will randomly determine when to obtain the verification sample using the Asphalt Mixture Sample Random Tonnage Generator. For specialty mixtures, the Department will perform one AC and one gradation determination per lot according to the corresponding procedures as given in Subsection 402.03.02. However, Department personnel will not perform AC determinations according to KM 64-405. The Contractor will obtain a quality control sample at the same time the Department obtains the mixture verification sample and perform testing according to the procedures given in Subsection 402.03.02. If the Contractor's quality control sample is verified by the Department's test results within the tolerances provided below, the Contractor's sample will serve as the quality control sample for the affected sublot. The Department may perform the mixture verification test on the Contractor's equipment or on the Department's equipment.
Subsection: **Part:** **Revision:**	402.03.03 Verification. A) Evaluation of Sublot(s) Verified by Department. Replace the third sentence of the second paragraph with the following: When the paired *t* -test indicates that the Contractor's data and Department's data are possibly not from the same population, the Department will investigate the cause for the difference according to Subsection 402.03.05 and implement corrective measures as the Engineer deems appropriate.
Subsection: **Part:** **Revision:**	402.03.03 Verification. B) Evaluation of Sublots Not Verified by Department. Replace the third sentence of the first paragraph with the following: When differences between test results are not within the tolerances listed below, the Department will resolve the discrepancy according to Subsection 402.03.05.

Supplemental Specifications to the
Standard Specifications for Road and Bridge Construction, 2012 Edition
Effective with the August 22, 2014 Letting

Subsection: **Part:** **Revision:**	402.03.03 Verification. B) Evaluation of Sublots Not Verified by Department. Replace the third sentence of the second paragraph with the following: When the *F* -test or *t* -test indicates that the Contractor's data and Department's data are possibly not from the same population, the Department will investigate the cause for the difference according to Subsection 402.03.05 and implement corrective measures as the Engineer deems appropriate.
Subsection: **Part:** **Revision:**	402.03.03 Verification. C) Test Data Patterns. Replace the second sentence with the following: When patterns indicate substantial differences between the verified and non-verified sublots, the Department will perform further comparative testing according to subsection 402.03.05.
Subsection: **Revision:**	402.03 CONSTRUCTION. Add the following subsection: **402.03.04 Testing Equipment and Technician Verification.** For mixtures with a minimum quantity of 20,000 tons and for every 20,000 tons thereafter, the Department will obtain an additional verification sample at random using the Asphalt Mixture Sample Random Tonnage Generator in order to verify the integrity of the Contractor's and Department's laboratory testing equipment and technicians. The Department will obtain a mixture sample of at least 150 lb at the asphalt mixing plant according to KM 64-425 and split it according to AASHTO R 47. The Department will retain one split portion of the sample and provide the other portion to the Contractor. At a later time convenient to both parties, the Department and Contractor will simultaneously reheat the sample to the specified compaction temperature and test the mixture for AV and VMA using separate laboratory equipment according to the corresponding procedures given in Subsection 402.03.02. The Department will evaluate the differences in test results between the two laboratories. When the difference between the results for AV or VMA is not within ± 2.0 percent, the Department will investigate and resolve the discrepancy according to Subsection 402.03.05.
Subsection: **Revision:**	402.03.04 Dispute Resolution. Change the subsection number to 402.03.05.
Subsection: **Part:** **Table:** **Revision:**	402.05 PAYMENT. Lot Pay Adjustment Schedule Compaction Option A Base and Binder Mixtures AC Replace the Deviation from JMF(%) that corresponds to a Pay Value of 0.95 to ±0.6.
Subsection: **Revision:**	403.02.10 Material Transfer Vehicle (MTV). Replace the first sentence with the following: In addition to the equipment specified above, provide a MTV with the following minimum characteristics:
Subsection: **Revision:**	412.02.09 Material Transfer Vehicle (MTV). Replace the paragraph with the following: Provide and utilize a MTV with the minimum characteristics outlined in section 403.02.10.

Supplemental Specifications to the
Standard Specifications for Road and Bridge Construction, 2012 Edition
Effective with the August 22, 2014 Letting

Subsection: **Revision:**	412.03.07 Placement and Compaction. Replace the first paragraph with the following: Use a MTV when placing SMA mixture in the driving lanes. The MTV is not required on ramps and/or shoulders unless specified in the contract. When the Engineer determines the use of the MTV is not practical for a portion of the project, the Engineer may waive its requirement for that portion of pavement by a letter documenting the waiver.
Subsection: **Revision:**	412.04 MEASUREMENT. Add the following subsection: 412.04.03. Material Transfer Vehicle (MTV). The Department will not measure the MTV for payment and will consider its use incidental to the asphalt mixture.
Subsection: **Part:** **Revision:**	501.03.19 Surface Tolerances and Testing Surface. B) Ride Quality. Add the following to the end of the first paragraph: The Department will specify if the ride quality requirements are Category A or Category B when ride quality is specified in the Contract. Category B ride quality requirements shall apply when the Department fails to classify which ride quality requirement will apply to the Contract.
Subsection: **Revision:**	603.03.06 Cofferdams. Replace the seventh sentence of paragraph one with the following: Submit drawings that are stamped by a Professional Engineer licensed in the Commonwealth of Kentucky.
Subsection: **Revision:**	605.03.04 Tack Welding. Insert the subsection and the following: 605.03.04 Tack Welding. The Department does not allow tack welding.
Subsection: **Part:** **Number:** **Revision:**	606.03.17 Special Requirements for Latex Concrete Overlays. A) Existing Bridges and New Structures. 1) Prewetting and Grout-Bond Coat. Add the following sentence to the last paragraph: Do not apply a grout-bond coat on bridge decks prepared by hydrodemolition.
Subsection: **Revision:**	609.03 Construction. Replace Subsection 609.03.01 with the following: 609.03.01 A) Swinging the Spans. Before placing concrete slabs on steel spans or precast concrete release the temporary erection supports under the bridge and swing the span free on its supports. 609.03.01 B) Lift Loops. Cut all lift loops flush with the top of the precast beam once the beam is placed in the final location and prior to placing steel reinforcement. At locations where lift loops are cut, paint the top of the beam with galvanized or epoxy paint.
Subsection: **Revision:**	611.03.02 Precast Unit Construction. Replace the first sentence of the subsection with the following: Construct units according to ASTM C1577, **replacing Table 1 (Design Requirements for Precast Concrete Box Sections Under Earth, Dead and HL-93 Live Load Conditions) with KY Table 1 (Precast Culvert KYHL-93 Design Table)**, and Section 605 with the following exceptions and additions:

Supplemental Specifications to the
Standard Specifications for Road and Bridge Construction, 2012 Edition
Effective with the August 22, 2014 Letting

Subsection: **Number:** **Revision:**	613.03.01 Design. 2) Replace "AASHTO Standard Specifications for Highway Bridges" with "AASHTO LRFD Bridge Design Specifications"
Subsection: **Revision:**	615.06.02 Add the following sentence to the end of the subsection. The ends of units shall be normal to walls and centerline except exposed edges shall be beveled ¾ inch.
Subsection: **Revision:**	615.06.03 Placement of Reinforcement in Precast 3-Sided Units. Replace the reference of 6.6 in the section to 615.06.06.
Subsection: **Revision:**	615.06.04 Placement of Reinforcement for Precast Endwalls. Replace the reference of 6.7 in the section to 615.06.07.
Subsection: **Revision:**	615.06.06 Laps, Welds, and Spacing for Precast 3-Sided Units. Replace the subsection with the following: Tension splices in the circumferential reinforcement shall be made by lapping. Laps may not be tack welded together for assembly purposes. For smooth welded wire fabric, the overlap shall meet the requirements of AASHTO 2012 Bridge Design Guide Section 5.11.2.5.2 and AASHTO 2012 Bridge Design Guide Section 5.11.6.3. For deformed welded wire fabric, the overlap shall meet the requirements of AASHTO 2012 Bridge Design Guide Section 5.11.2.5.1 and AASHTO 2012 Bridge Design Guide Section 5.11.6.2. The overlap of welded wire fabric shall be measured between the outer most longitudinal wires of each fabric sheet. For deformed billet-steel bars, the overlap shall meet the requirements of AASHTO 2012 Bridge Design Guide Section 5.11.2.1. For splices other than tension splices, the overlap shall be a minimum of 12" for welded wire fabric or deformed billet-steel bars. The spacing center to center of the circumferential wires in a wire fabric sheet shall be no less than 2 inches and no more than 4 inches. The spacing center to center of the longitudinal wires shall not be more than 8 inches. The spacing center to center of the longitudinal distribution steel for either line of reinforcing in the top slab shall be not more than 16 inches.
Subsection: **Revision:**	615.06.07 Laps, Welds, and Spacing for Precast Endwalls. Replace the subsection with the following: Splices in the reinforcement shall be made by lapping. Laps may not be tack welded together for assembly purposes. For smooth welded wire fabric, the overlap shall meet the requirements of AASHTO 2012 Bridge Design Guide Section 5.11.2.5.2 and AASHTO 2012 Bridge Design Guide Section 5.11.6.3. For deformed welded wire fabric, the overlap shall meet the requirements of AASHTO 2012 Bridge Design Guide Section 5.11.2.5.1 and AASHTO 2012 Bridge Design Guide Section 5.11.6.2. For deformed billet-steel bars, the overlap shall meet the requirements of AASHTO 2012 Bridge Design Guide Section 5.11.2.1. The spacing center-to-center of the wire fabric sheet shall not be less than 2 inches or more than 8 inches.

Supplemental Specifications to the
Standard Specifications for Road and Bridge Construction, 2012 Edition
Effective with the August 22, 2014 Letting

Subsection: **Revision:**	615.08.01 Type of Test Specimen. Replace the subsection with the following: Start-up slump, air content, unit weight, and temperature tests will be performed each day on the first batch of concrete. Acceptable start-up results are required for production of the first unit. After the first unit has been established, random acceptance testing is performed daily for each 50 yd^3 (or fraction thereof). In addition to the slump, air content, unit weight, and temperature tests, a minimum of one set of cylinders shall be required each time plastic property testing is performed.
Subsection: **Revision:**	615.08.02 Compression Testing. Delete the second sentence.
Subsection: **Revision:**	615.08.04 Acceptability of Core Tests. Delete the entire subsection.
Subsection: **Revision:**	615.12 Inspection. Add the following sentences to the end of the subsection: Units will arrive at jobsite with the "Kentucky Oval" stamped on the unit which is an indication of acceptable inspection at the production facility. Units shall be inspected upon arrival for any evidence of damage resulting from transport to the jobsite.
Subsection: **Revision:**	716.02.02 Paint. Replace sentence with the following: Conform to Section 821.
Subsection: **Revision:**	716.03 CONSTRUCTION. Replace bullet 5) with the following: 5) AASHTO Standard Specifications for Structural Supports for Highway Signs, Luminaires, and Traffic Signals, 2013-6th Edition with current interims,
Subsection: **Revision:**	716.03.02 Lighting Standard Installation. Replace the second sentence with the following: Regardless of the station and offset noted, locate all poles/bases behind the guardrail a minimum of four feet from the front face of the guardrail to the front face of the pole base.
Subsection: **Part:** **Revision:**	716.03.02 Lighting Standard Installation. A) Conventional Installation. Replace the third sentence with the following: Orient the transformer base so the door is positioned on the side away from on-coming traffic.
Subsection: **Part:** **Number:** **Revision:**	716.03.02 Lighting Standard Installation. A) Conventional Installation. 1) Breakaway Installation and Requirements. Replace the first sentence with the following: For breakaway supports, conform to Section 12 of the AASHTO Standard Specifications for Structural Supports for Highway Signs, Luminaires, and Traffic Signals, 2013-6th Edition with current interims.
Subsection: **Part:** **Revision:**	716.03.02 Lighting Standard Installation. B) High Mast Installation Replace the first sentence with the following: Install each high mast pole as noted on plans.
Subsection: **Part:** **Number:** **Revision:**	716.03.02 Lighting Standard Installation. B) High Mast Installation 2) Concrete Base Installation Modification of Chart and succeeding paragraphs within this section:

Supplemental Specifications to the
Standard Specifications for Road and Bridge Construction, 2012 Edition
Effective with the August 22, 2014 Letting

Drilled Shaft Depth Data							
Level Ground		3:1 Ground Slope		2:1 Ground Slope		1.5:1 Ground Slope (2)	
Soil	Rock	Soil	Rock	Soil	Rock	Soil	Rock
17 ft	7 ft	19 ft	7 ft	20 ft	7 ft	(1)	7 ft

Steel Requirements			
Vertical Bars		Ties or Spiral	
Size	Total	Size	Spacing or Pitch
#10	16	#4	12 inch

(1): Shaft length is 22' for cohesive soil only. For cohesionless soil, contact geotechnical branch for design.
(2): Do not construct high mast drilled shafts on ground slopes steeper than 1.5:1 without the approval of the Division of Traffic.

If rock is encountered during drilling operations and confirmed by the engineer to be of sound quality, the shaft is only required to be further advanced into the rock by the length of rock socket shown in the table. The total length of the shaft need not be longer than that of soil alone. Both longitudinal rebar length and number of ties or spiral length shall be adjusted accordingly.

If a shorter depth is desired for the drilled shaft, the contractor shall provide, for the state's review and approval, a detailed column design with individual site specific soil and rock analysis performed and approved by a Professional Engineer licensed in the Commonwealth of Kentucky.

Spiral reinforcement may be substituted for ties. If spiral reinforcement is used, one and one-half closed coils shall be provided at the ends of each spiral unit. Subsurface conditions consisting of very soft clay or very loose saturated sand could result in soil parameters weaker than those assumed. Engineer shall consult with the geotechnical branch if such conditions are encountered.

The bottom of the drilled hole shall be firm and thoroughly cleaned so no loose or compressible materials are present at the time of the concrete placement. If the drilled hole contains standing water, the concrete shall be placed using a tremie to displace water. Continuous concrete flow will be required to insure full displacement of any water.

The reinforcement and anchor bolts shall be adequately supported in the proper positions so no movement occurs during concrete placement. Welding of anchor bolts to the reinforcing cage is unacceptable, templates shall be used. Exposed portions of the foundation shall be formed to create a smooth finished surface. All forming shall be removed upon completion of foundation construction.

Subsection: 716.03.03 Trenching.
Part: A) Trenching of Conduit for Highmast Ducted Cables.
Revision: Add the following after the first sentence: If depths greater than 24 inches are necessary, obtain the Engineer's approval and maintain the required conduit depths coming into the junction boxes. No payment for additional junction boxes for greater depths will be allowed.

Supplemental Specifications to the
Standard Specifications for Road and Bridge Construction, 2012 Edition
Effective with the August 22, 2014 Letting

Subsection: **Part:** **Revision:**	716.03.03 Trenching. B) Trenching of Conduit for Non-Highmast Cables. Add the following after the second sentence: If depths greater than 24 inches are necessary for either situation listed previously, obtain the Engineer's approval and maintain the required conduit depths coming into the junction boxes. No payment for additional junction boxes for greater depths will be allowed.
Subsection: **Revision:**	716.03.10 Junction Boxes. Replace subsection title with the following: Electrical Junction Box.
Subsection: **Revision:**	716.04.07 Pole with Secondary Control Equipment. Replace the paragraph with the following: The Department will measure the quantity as each individual unit furnished and installed. The Department will not measure mounting the cabinet to the pole, backfilling, restoration, any necessary hardware to anchor pole, or electrical inspection fees, and will consider them incidental to this item of work. The Department will also not measure furnishing and installing electrical service conductors, specified conduits, meter base, transformer, service panel, fused cutout, fuses, lighting arrestors, photoelectrical control, circuit breaker, contactor, manual switch, ground rods, and ground wires and will consider them incidental to this item of work.
Subsection: **Revision:**	716.04.08 Lighting Control Equipment. Replace the paragraph with the following: The Department will measure the quantity as each individual unit furnished and installed. The Department will not measure constructing the concrete base, excavation, backfilling, restoration, any necessary anchors, or electrical inspection fees, and will consider them incidental to this item of work. The Department will also not measure furnishing and installing electrical service conductors, specified conduits, meter base, transformer, service panel, fused cutout, fuses, lighting arrestors, photoelectrical control, circuit breakers, contactor, manual switch, ground rods, and ground wires and will consider them incidental to this item of work.
Subsection: **Revision:**	716.04.09 Luminaire. Replace the first sentence with the following: The Department will measure the quantity as each individual unit furnished and installed.
Subsection: **Revision:**	716.04.10 Fused Connector Kits. Replace the first sentence with the following: The Department will measure the quantity as each individual unit furnished and installed.
Subsection: **Revision:**	716.04.13 Junction Box. Replace the subsection title with the following: Electrical Junction Box Type Various.
Subsection: **Part:** **Revision:**	716.04.13 Junction Box. A) Junction Electrical. Rename A) Junction Electrical to the following: A) Electrical Junction Box.
Subsection: **Revision:**	716.04.14 Trenching and Backfilling. Replace the second sentence with the following: The Department will not measure excavation, backfilling, underground utility warning tape (if required), the restoration of disturbed areas to original condition, and will consider them incidental to this item of work.

Supplemental Specifications to the
Standard Specifications for Road and Bridge Construction, 2012 Edition
Effective with the August 22, 2014 Letting

Subsection: **Revision:**	716.04.18 Remove Lighting. Replace the paragraph with the following: The Department will measure the quantity as a lump sum for the removal of lighting equipment. The Department will not measure the disposal of all equipment and materials off the project by the contractor. The Department also will not measure the transportation of the materials and will consider them incidental to this item of work.
Subsection: **Revision:**	716.04.20 Bore and Jack Conduit. Replace the paragraph with the following: The Department will measure the quantity in linear feet. This item shall include all work necessary for boring and installing conduit under an existing roadway. Construction methods shall be in accordance with Sections 706.03.02, paragraphs 1, 2, and 4.
Subsection: **Revision:**	716.05 PAYMENT. Replace items 04810-04811, 20391NS835 and, 20392NS835 under Code, Pay Item, and Pay Unit with the following: Code — Pay Item — Pay Unit 04810 — Electrical Junction Box — Each 04811 — Electrical Junction Box Type B — Each 20391NS835 — Electrical Junction Box Type A — Each 20392NS835 — Electrical Junction Box Type C — Each
Subsection: **Revision:**	723.02.02 Paint. Replace sentence with the following: Conform to Section 821.
Subsection: **Revision:**	723.03 CONSTRUCTION. Replace bullet 5) with the following: 5) AASHTO Standard Specifications for Structural Supports for Highway Signs, Luminaires, and Traffic Signals, 2013-6th Edition with current interims,
Subsection: **Revision:**	723.03.02 Poles and Bases Installation. Replace the first sentence with the following: Regardless of the station and offset noted, locate all poles/bases behind the guardrail a minimum of four feet from the front face of the guardrail to the front face of the pole base.
Subsection: **Part:** **Revision:**	723.03.02 Poles and Bases Installation. A) Steel Strain and Mastarm Poles Installation Replace the second paragraph with the following: For concrete base installation, see Section 716.03.02, B), 2), Paragraphs 2-7. Drilled shaft depth shall be based on the soil conditions encountered during drilling and slope condition at the site. Refer to the design chart below:
Subsection: **Part:** **Revision:**	723.03.02 Poles and Bases Installation. B) Pedestal or Pedestal Post Installation. Replace the fourth sentence of the paragraph with the following: For breakaway supports, conform to Section 12 of the AASHTO Standard Specifications for Structural Supports for Highway Signs, Luminaires, and Traffic Signals, 2013-6th Edition with current interims.

Supplemental Specifications to the
Standard Specifications for Road and Bridge Construction, 2012 Edition
Effective with the August 22, 2014 Letting

Subsection: **Part:** **Revision:**	723.03.03 Trenching. A) Under Roadway. Add the following after the second sentence: If depths greater than 24 inches are necessary, obtain the Engineer's approval and maintain ether required conduit depths coming into the junction boxes. No payment for additional junction boxes for greater depths will be allowed.
Subsection: **Revision:**	723.03.11 Wiring Installation. Add the following sentence between the fifth and sixth sentences: Provide an extra two feet of loop wire and lead-in past the installed conduit in poles, pedestals, and junction boxes.
Subsection: **Revision:**	723.03.12 Loop Installation. Replace the fourth sentence of the 2nd paragraph with the following: Provide an extra two feet of loop wire and lead-in past the installed conduit in poles, pedestals, and junction boxes.
Subsection: **Revision:**	723.04.02 Junction Box. Replace subsection title with the following: Electrical Junction Box Type Various.
Subsection: **Revision:**	723.04.03 Trenching and Backfilling. Replace the second sentence with the following: The Department will not measure excavation, backfilling, underground utility warning tape (if required), the restoration of disturbed areas to original condition, and will consider them incidental to this item of work.
Subsection: **Revision:**	723.04.10 Signal Pedestal. Replace the second sentence with the following: The Department will not measure excavation, concrete, reinforcing steel, specified conduits, fittings, ground rod, ground wire, backfilling, restoring disturbed areas, or other necessary hardware and will consider them incidental to this item of work.
Subsection: **Revision:**	723.04.15 Loop Saw Slot and Fill. Replace the second sentence with the following: The Department will not measure sawing, cleaning and filling induction loop saw slot, loop sealant, backer rod, and grout and will consider them incidental to this item of work.
Subsection: **Revision:**	723.04.16 Pedestrian Detector. Replace the paragraph with the following: The Department will measure the quantity as each individual unit furnished, installed and connected to pole/pedestal. The Department will not measure installing R10-3e (with arrow) sign, furnishing and installing mounting hardware for sign and will consider them incidental to this item of work.
Subsection: **Revision:**	723.04.18 Signal Controller- Type 170. Replace the second sentence with the following: The Department will not measure constructing the concrete base or mounting the cabinet to the pole, connecting the signal and detectors, excavation, backfilling, restoration, any necessary pole mounting hardware, electric service, or electrical inspection fees and will consider them incidental to this item of work. The Department will also not measure furnishing and connecting the induction of loop amplifiers, pedestrian isolators, load switches, model 400 modem card; furnishing and installing electrical service conductors, specified conduits, anchors, meter base, fused cutout, fuses, ground rods, ground wires and will consider them incidental to this item of work.

Supplemental Specifications to the
Standard Specifications for Road and Bridge Construction, 2012 Edition
Effective with the August 22, 2014 Letting

Subsection: **Revision:**	723.04.20 Install Signal Controller - Type 170. Replace the paragraph with the following: The Department will measure the quantity as each individual unit installed. The Department will not measure constructing the concrete base or mounting the cabinet to the pole, connecting the signal and detectors, and excavation, backfilling, restoration, any necessary pole mounting hardware, electric service, or electrical inspection fees and will consider them incidental to this item of work. The Department will also not measure connecting the induction loop amplifiers, pedestrian, isolators, load switches, model 400 modem card; furnishing and installing electrical service conductors, specified conduits, anchors, meter base, fused cutout, fuses, ground rods, ground wires and will consider them incidental to this item of work.
Subsection: **Revision:**	723.04.22 Remove Signal Equipment. Replace the paragraph with the following: The Department will measure the quantity as a lump sum removal of signal equipment. The Department will not measure the return of control equipment and signal heads to the Department of Highways as directed by the District Traffic Engineer. The Department also will not measure the transportation of materials of the disposal of all other equipment and materials off the project by the contractor and will consider them incidental to this item of work.
Subsection: **Revision:**	723.04.28 Install Pedestrian Detector Audible. Replace the second sentence with the following: The Department will not measure installing sign R10-3e (with arrow) and will consider it incidental to this item of work.
Subsection: **Revision:**	723.04.29 Audible Pedestrian Detector. Replace the second sentence with the following: The Department will not measure furnishing and installing the sign R10-3e (with arrow) and will consider it incidental to this item of work.
Subsection: **Revision:**	723.04.30 Bore and Jack Conduit. Replace the paragraph with the following: The Department will measure the quantity in linear feet. This item shall include all work necessary for boring and installing conduit under an existing roadway. Construction methods shall be in accordance with Sections 706.03.02, paragraphs 1, 2, and 4.
Subsection: **Revision:**	723.04.31 Install Pedestrian Detector. Replace the paragraph with the following: The Department will measure the quantity as each individual unit installed and connected to pole/pedestal. The Department will not measure installing sign R 10-3e (with arrow) and will consider it incidental to this item of work.
Subsection: **Revision:**	723.04.32 Install Mast Arm Pole. Replace the second sentence with the following: The Department will not measure arms, signal mounting brackets, anchor bolts, or any other necessary hardware and will consider them incidental to this item of work.
Subsection: **Revision:**	723.04.33 Pedestal Post. Replace the second sentence with the following: The Department will not measure excavation, concrete, reinforcing steel, anchor bolts, conduit, fittings, ground rod, ground wire, backfilling, restoration, or any other necessary hardware and will consider them incidental to this item of work.

Supplemental Specifications to the
Standard Specifications for Road and Bridge Construction, 2012 Edition
Effective with the August 22, 2014 Letting

Subsection: **Revision:**	723.04.36 Traffic Signal Pole Base. Replace the second sentence with the following: The Department will not measure excavation, reinforcing steel, anchor bolts, specified conduits, ground rods, ground wires, backfilling, or restoration and will consider them incidental to this item of work.
Subsection: **Revision:**	723.04.37 Install Signal Pedestal. Replace the second sentence with the following: The Department will not measure excavation, concrete, reinforcing steel, anchor bolts, specified conduits, fittings, ground rod, ground wire, backfilling, restoration, or any other necessary hardware and will consider them incidental to this item of work.
Subsection: **Revision:**	723.04.38 Install Pedestal Post. Replace the second sentence with the following: The Department will not measure excavation, concrete, reinforcing steel, anchor bolts, specified conduits, fittings, ground rod, ground wire, backfilling, restoration, or any other necessary hardware and will consider them incidental to this item of work.
Subsection: **Revision:**	723.05 PAYMENT. Replace items 04810-04811, 20391NS835 and, 20392NS835 under Code, Pay Item, and Pay Unit with the following: Code — Pay Item — Pay Unit 04810 — Electrical Junction Box — Each 04811 — Electrical Junction Box Type B — Each 20391NS835 — Electrical Junction Box Type A — Each 20392NS835 — Electrical Junction Box Type C — Each
Subsection: **Revision:**	804.01.02 Crushed Sand. Delete last sentence of the section.
Subsection: **Revision:**	804.01.06 Slag. Add subsection and following sentence. Provide blast furnace slag sand where permitted. The Department will allow steel slag sand only in asphalt surface applications.
Subsection: **Revision:**	804.04 Asphalt Mixtures. Replace the subsection with the following: Provide natural, crushed, conglomerate, or blast furnace slag sand, with the addition of filler as necessary, to meet gradation requirements. The Department will allow any combination of natural, crushed, conglomerate or blast furnace slag sand when the combination is achieved using cold feeds at the plant. The Engineer may allow other fine aggregates.
Subsection: **Revision:**	806.03.01 General Requirements. Replace the second sentence of the paragraph with the following: Additionally, the material must have a minimum solubility of 99.0 percent when tested according to AASHTO T 44 and PG 76-22 must exhibit a minimum recovery of 60 percent, with a J_{NR} (nonrecoverable creep compliance) between 0.1 and 0.5, when tested according to AASHTO TP 70.

Supplemental Specifications to the Standard Specifications for Road and Bridge Construction, 2012 Edition Effective with the August 22, 2014 Letting

Subsection: **Table:** **Revision:**	806.03.01 General Requirements. PG Binder Requirements and Price Adjustment Schedule Replace the Elastic Recovery, % [3] (AASHTO T301) and all corresponding values in the table with the following: Test / Specification / 100% Pay / 90% Pay / 80% Pay / 70% Pay / 50%Pay[1] MSCR recovery, % [3] (AASHTO TP 70) / 60 Min. / ≥58 / 56 / 55 / 54 / <53
Subsection: **Table:** **Superscript:** **Revision:**	806.03.01 General Requirements. PG Binder Requirements and Price Adjustment Schedule (3) Replace [3] with the following: Perform testing at 64°C.
Subsection: **Revision:**	813.04 Gray Iron Castings. Replace the reference to "AASHTO M105" with "ASTM A48".
Subsection: **Number:** **Revision:**	813.09.02 High Strength Steel Bolts, Nuts, and Washers. A) Bolts. Delete first paragraph and "Hardness Number" Table. Replace with the following: A) Bolts. Conform to ASTM A325 (AASHTO M164) or ASTM A490 (AASHTO 253) as applicable.
Subsection: **Revision:**	814.04.02 Timber Guardrail Posts. Third paragraph, replace the reference to "AWPA C14" with "AWPA U1, Section B, Paragraph 4.1".
Subsection: **Revision:**	814.04.02 Timber Guardrail Posts. Replace the first sentence of the fourth paragraph with the following: Use any of the species of wood for round or square posts covered under AWPA U1.
Subsection: **Revision:**	814.04.02 Timber Guardrail Posts. Fourth paragraph, replace the reference to "AWPA C2" with "AWPA U1, Section B, Paragraph 4.1".
Subsection: **Revision:**	814.04.02 Timber Guardrail Posts. Delete the second sentence of the fourth paragraph.
Subsection: **Revision:**	814.05.02 Composite Plastic. 1) Add the following to the beginning of the first paragraph: Select composite offset blocks conforming to this section and assure blocks are from a manufacturer included on the Department's List of Approved Materials. 2) Delete the last paragraph of the subsection.
Subsection: **Revision:**	816.07.02 Wood Posts and Braces. First paragraph, replace the reference to "AWPA C5" with "AWPA U1, Section B, Paragraph 4.1".
Subsection: **Revision:**	816.07.02 Wood Posts and Braces. Delete the second sentence of the first paragraph.
Subsection: **Revision:**	818.07 Preservative Treatment. First paragraph, replace all references to "AWPA C14" with "AWPA U1, Section A".

Supplemental Specifications to the
Standard Specifications for Road and Bridge Construction, 2012 Edition
Effective with the August 22, 2014 Letting

Subsection: **Revision:**	834.14 Lighting Poles. Replace the first sentence with the following: Lighting pole design shall be in accordance with loading and allowable stress requirements of the AASHTO Standard Specifications for Structural Supports for Highway Signs, Luminaires, and Traffic Signals, 2013-6th Edition with current interims, with the exception of the following: The Cabinet will waive the requirement stated in the first sentence of Section 5.14.6.2 – Reinforced Holes and Cutouts for high mast poles (only). The minimum diameter at the base of the pole shall be 22 inches for high mast poles (only).
Subsection **Revision:**	834.14.03 High Mast Poles. Remove the second and fourth sentence from the first paragraph.
Subsection **Revision:**	834.14.03 High Mast Poles. Replace the third paragraph with the following: Provide calculations and drawings that are stamped by a Professional Engineer licensed in the Commonwealth of Kentucky.
Subsection: **Revision:**	834.14.03 High Mast Poles. Replace paragraph six with the following: Provide a pole section that conforms to ASTM A 595 grade A with a minimum yield strength of 55 KSI or ASTM A 572 with a minimum yield strength of 55 KSI. Use tubes that are round or 16 sided with a four inch corner radius, have a constant linear taper of .144 in/ft and contain only one longitudinal seam weld. Circumferential welded tube butt splices and laminated tubes are not permitted. Provide pole sections that are telescopically slip fit assembled in the field to facilitate inspection of interior surface welds and the protective coating. The minimum length of the telescopic slip splices shall be 1.5 times the inside diameter of the exposed end of the female section. Use longitudinal seam welds as commended in Section 5.15 of the AASHTO 2013 Specifications. The thickness of the transverse base shall not be less than 2 inches. Plates shall be integrally welded to the tubes with a telescopic welded joint or a full penetration groove weld with backup bar. The handhole cover shall be removable from the handhole frame. One the frame side opposite the hinge, provide a mechanism on the handhole cover/frame to place the Department's standard padlock as specified in Section 834.25. The handhole frame shall have two stainless studs installed opposite the hinge to secure the handhole cover to the frame which includes providing stainless steel wing nuts and washers. The handhole cover shall be manufactured from 0.25 inch thick galvanized steel (ASTM A 153) and have a neoprene rubber gasket that is permanently secured to the handhole frame to insure weather-tight protection. The hinge shall be manufactured from 7-guage stainless steel to provide adjustability to insure weather-tight fit for the cover. The minimum clear distance between the transverse plate and the bottom opening of the handhole shall not be less than the diameter of the bottom tube of the pole but needs to be at least 15 inches. Provide products that are hot-dip galvanized to the requirements of either ASTM A123 (fabricated products) or ASTM A 153 (hardware items).
Subsection: **Revision:**	834.16 ANCHOR BOLTS. Insert the following sentence at the beginning of the paragraph: The anchor bolt design shall follow the NCHRP Report 494 Section 2.4 and NCHRP 469 Appendix A Specifications.

Supplemental Specifications to the
Standard Specifications for Road and Bridge Construction, 2012 Edition
Effective with the August 22, 2014 Letting

Subsection: **Revision:**	834.17.01 Conventional. Add the following sentence after the second sentence: Provide a waterproof sticker mounted on the bottom of the housing that is legible from the ground and indicates the wattage of the fixture by providing the first two numbers of the wattage.
Subsection: **Revision:**	834.21.01 Waterproof Enclosures. Replace the last five sentences in the second paragraph with the following sentences: Provide a cabinet door with a louvered air vent, filter-retaining brackets and an easy to clean metal filter. Provide a cabinet door that is keyed with a factory installed standard no. 2 corbin traffic control key. Provide a light fixture with switch and bulb. Use a 120-volt fixture and utilize a L.E.D. bulb (equivalent to 60 watts minimum). Fixture shall be situated at or near the top of the cabinet and illuminate the contents of the cabinet. Provide a 120 VAC GFI duplex receptacle in the enclosure with a separate 20 amp breaker.
Subsection: **Revision:**	835.07 Traffic Poles. Replace the first sentence of the first paragraph with the following: Pole diameter and wall thickness shall be calculated in accordance with the AASHTO Standard Specifications for Structural Supports for Highway Signs, Luminaires, and Traffic Signals, 2013-6th Edition with current interims.
Subsection: **Revision:**	835.07 Traffic Poles. *Replace the first sentence of the fourth paragraph with the following: Ensure transverse plates have a thickness ≥ 2 inches. *Add the following sentence to the end of the fourth paragraph: The bottom pole diameter shall not be less than 16.25 inches.
Subsection: **Revision:**	835.07 Traffic Poles. Replace the third sentence of the fifth paragraph with the following: For anchor bolt design, pole forces shall be positioned in such a manner to maximize the force on any individual anchor bolt regardless of the actual anchor bolt orientation with the pole.
Subsection: **Revision:**	835.07 Traffic Poles. Replace the first and second sentence of the sixth paragraph with the following: The pole handhole shall be 25 inches by 6.5 inches. The handhole cover shall be removable from the handhole frame. On the frame side opposite the hinge, provide a mechanism on the handhole cover/frame to place the Department's standard padlock as specified in Section 834.25. The handhole frame shall have two stainless studs installed opposite the hinge to secure the handhole cover to the frame which includes providing stainless steel wing nuts and washers. The handhole cover shall be manufactured from 0.25 inch thick galvanized steel (ASTM 153) and have a neoprene rubber gasket that is permanently secured to the handhole frame to insure weather-tight protection. The hinge shall be manufactured from 7 gauge stainless steel to provide adjustability to insure a weather-tight fit for the cover. The minimum clear distance between the transverse plate and the bottom opening of the handhole shall not be less than the diameter of the bottom tube but needs to be at least 12 inches.

Supplemental Specifications to the Standard Specifications for Road and Bridge Construction, 2012 Edition Effective with the August 22, 2014 Letting

Subsection: **Revision:**	835.07 Traffic Poles. *Replace the first sentence of the last paragraph with the following: Provide calculations and drawings that are stamped by a Professional Engineer licensed in the Commonwealth of Kentucky. *Replace the third sentence of the last paragraph with the following: All tables referenced in 835.07 are found in the AASHTO Standard Specifications for Structural Supports for Highway Signs, Luminaires, and Traffic Signals, 2013-6th Edition with current interims.
Subsection: **Revision:**	835.07.01 Steel Strain Poles. Replace the second sentence of the second paragraph with the following: The detailed analysis shall be certified by a Professional Engineer licensed in the Commonwealth of Kentucky.
Subsection: **Revision:**	835.07.01 Steel Strain Poles. Replace number 7. after the second paragraph with the following: 7. Fatigue calculations should be shown for all fatigue related connections. Provide the corresponding detail, stress category and example from table 11.9.3.1-1.
Subsection: **Revision:**	835.07.02 Mast Arm Poles. Replace the second sentence of the fourth paragraph with the following: The detailed analysis shall be certified by a Professional Engineer licensed in the Commonwealth of Kentucky.
Subsection: **Revision:**	835.07.02 Mast Arm Poles. Replace number 7) after the fourth paragraph with the following: 7) Fatigue calculations should be shown for all fatigue related connections. Provide the corresponding detail, stress category and example from table 11.9.3.1-1.
Subsection: **Revision:**	835.07.03 Anchor Bolts. Add the following to the end of the paragraph: There shall be two steel templates (one can be used for the headed part of the anchor bolt when designed in this manner) provided per pole. Templates shall be contained within a 26.5 inch diameter. All templates shall be fully galvanized (ASTM A 153).
Subsection: **Revision:**	835.16.05 Optical Units. Replace the 3rd paragraph with the following: The list of certified products can be found on the following website: http://www.intertek.com.
Subsection: **Revision:**	835.19.01 Pedestrian Detector Body. Replace the first sentence with the following: Provide a four holed pole mounted aluminum rectangular housing that is compatible with the pedestrian detector.
Subsection: **Table:** **Revision:**	843.01.01 Geotextile Fabric. TYPE I FABRIC GEOTEXTILES FOR SLOPE PROTECTION AND CHANNEL LINING Add the following to the chart: Property — Minimum Value(1) — Test Method CBR Puncture (lbs) — 494 — ASTM D6241 Permittivity (1/s) — 0.7 — ASTM D4491

Supplemental Specifications to the
Standard Specifications for Road and Bridge Construction, 2012 Edition
Effective with the August 22, 2014 Letting

Subsection: 843.01.01 Geotextile Fabric.
Table: TYPE II FABRIC GEOTEXTILES FOR UNDERDRAINS
Revision: Add the following to the chart:

Property	Minimum Value[1]	Test Method
CBR Puncture (lbs)	210	ASTM D6241
Permittivity (1/s)	0.5	ASTM D4491

Subsection: 843.01.01 Geotextile Fabric.
Table: TYPE III FABRIC GEOTEXTILES FOR SUBGRADE OR EMBANKMENT STABILIZATION
Revision: Add the following to the chart:

Property	Minimum Value[1]	Test Method
CBR Puncture (lbs)	370	ASTM D6241
Permittivity (1/s)	0.05	ASTM D4491

Subsection: 843.01.01 Geotextile Fabric.
Table: TYPE IV FABRIC GEOTEXTILES FOR EMBANKMENT DRAINAGE BLANKETS AND PAVEMENT EDGE DRAINS
Revision: Add the following to the chart:

Property	Minimum Value[1]	Test Method
CBR Puncture (lbs)	309	ASTM D6241
Permittivity (1/s)	0.5	ASTM D4491

Subsection: 843.01.01 Geotextile Fabric.
Table: TYPE V HIGH STRENGTH GEOTEXTILE FABRIC
Revision: Make the following changes to the chart:

Property	Minimum Value[1]	Test Method
CBR Puncture (lbs)	618	ASTM D6241
Grab Strength (lbs)	700	ASTM D4632
Apparent Opening Size	U.S. #40[3]	ASTM D4751

[3] Maximum average roll value.

2012 STANDARD DRAWINGS THAT APPLY

ROADWAY

~ *BARRIERS* ~

TYPICAL BARRIER INSTALLATIONS

TYPICAL GUARDRAIL INSTALLATIONS.....RBI-001-10
TYPICAL GUARDRAIL INSTALLATIONS.....RBI-002-06
INSTALLATION OF GUARDRAIL END TREATMENT TYPE 1.....RBI-004-04

GUARDRAIL HARDWARE

GUARDRAIL TERMINAL SECTIONS RBR-010-05
GUARDRAIL POSTS..... RBR-016-04
GUARDRAIL END TREATMENT TYPE 1..... RBR-020-05
STEEL BEAM GUARDRAIL (THRIE BEAM)..... RBR-100-06

TRAFFIC

~ *TEMPORARY* ~

TRAFFIC CONTROL

SHOULDER CLOSURE.....TTC-135-01

COUNTY OF	ITEM NO.	SHEET NO.

NOTES

1. THE DELINEATOR'S SHAPE AND DIMENSIONS ARE SHOWN FOR ILLUSTRATION PURPOSES ONLY. TYPES OF DELINEATORS PERMITTED SHALL BE FROM THE LIST OF APPROVED MATERIALS.
2. DELINEATOR SHALL BE MEASURED AND PAID FOR AT THE CONTRACT UNIT PRICE EACH AND SHALL INCLUDE ALL MATERIALS AND LABOR NECESSARY FOR ONE COMPLETE INSTALLATION.
3.

CODE	PAY ITEM	PAY UNIT
1982	DELINEATOR FOR GUARDRAIL - MONO DIRECTIONAL WHITE	EACH
1983	DELINEATOR FOR GUARDRAIL - MONO DIRECTIONAL YELLOW	EACH
1987	DELINEATOR FOR GUARDRAIL - BI-DIRECTIONAL WHITE	EACH

4. GUARDRAIL DELINEATORS SHALL BE REQUIRED ON ALL GUARDRAIL.
5. DELINEATORS SHALL BE MANUFACTURED FROM 12 GA. GALVANIZED STEEL.
6. DIMENSIONS SHOWN ARE APPROXIMATE AND ARE SUBJECT TO MANUFACTURER'S TOLERANCES.
7. WHEN CONCRETE BARRIERS EXTEND ACROSS BRIDGE STRUCTURES IN LIEU OF STEEL BEAM GUARDRAIL, DELINEATORS SHALL BE INSTALLED AT SAME VERTICAL ALIGNMENT AS ON THE GUARDRAIL, AND DELINEATORS SHALL COMPLY WITH CURRENT SEPIA DRAWING 004.
8. DELINEATORS SHALL BE INSTALLED IN ACCORDANCE WITH MANUFACTURER'S RECOMMENDATIONS.

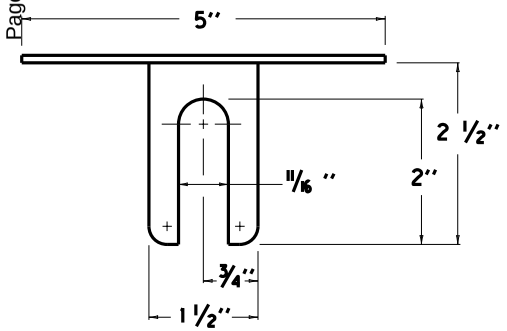

PLAN VIEW

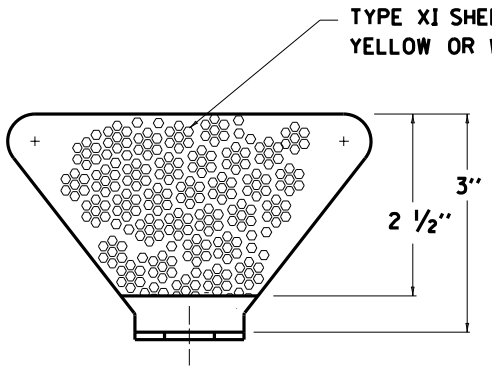

FRONT VIEW

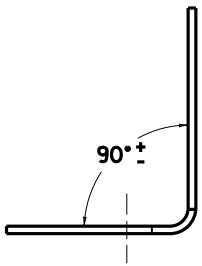

SIDE VIEW

NOTE: DIMENSIONS SHOWN ARE FOR ONE VERSION OF A WEB-MOUNTED GUARDRAIL DELINEATOR. DELINEATORS WITH ALTERNATE DIMENSIONS MAY BE CONSIDERED FOR INCLUSION ON THE APPROVED PRODUCTS LIST.

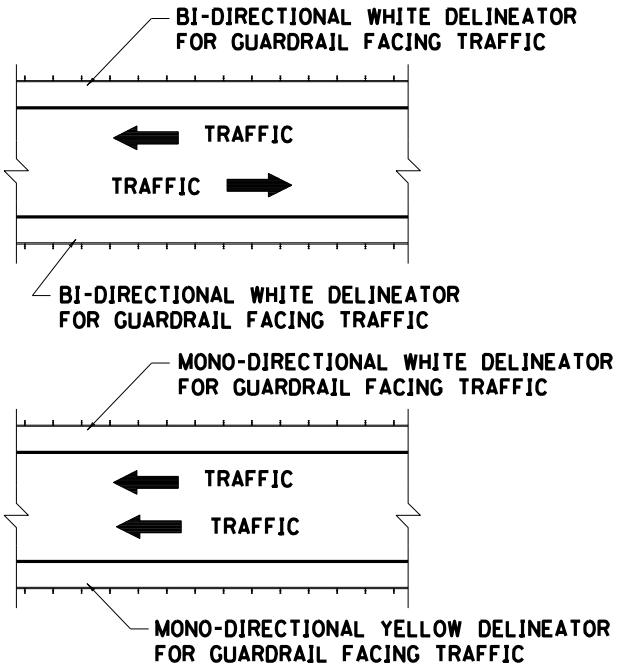

PLACEMENT OF DELINEATORS FOR GUARDRAIL

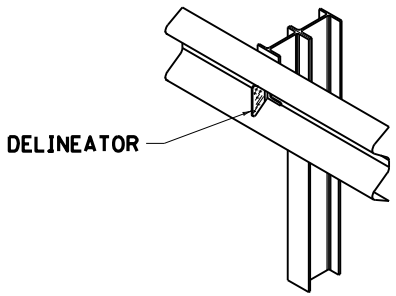

ISOMETRIC VIEW

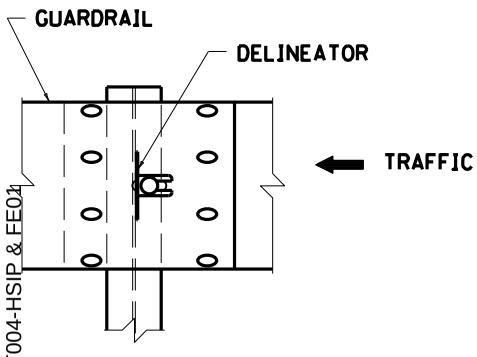

FRONT VIEW

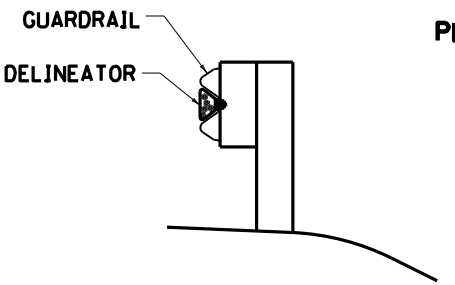

SIDE VIEW

APPROXIMATE DELINEATOR SPACING	
TANGENT	100'
CURVE	50'

SPACING SHOULD BE ADJUSTED IN CURVES SO THAT SEVERAL DELINEATORS ARE ALWAYS SIMULTANEOUSLY VISIBLE TO THE ROAD USER.

KENTUCKY DEPARTMENT OF HIGHWAYS

DELINEATORS FOR GUARDRAIL

SUBMITTED Jeff Vogen 6-15-2012
DIRECTOR DIVISION OF DESIGN DATE

002

COUNTY OF	ITEM NO.	SHEET NO.

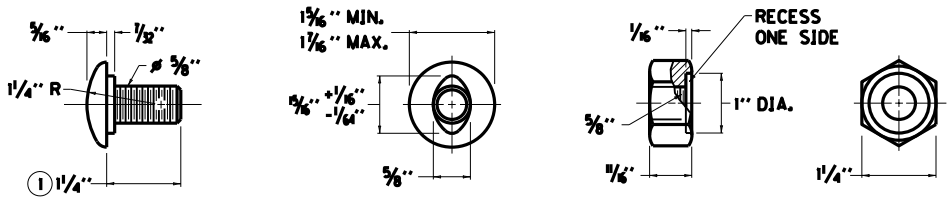

5/8" BUTTON HEAD BOLT AND RECESSED NUT

NOTES

1. RAIL BOLT SIMILAR EXCEPT LENGTH.
2. THE THRIE BEAM TO "W" BEAM CONNECTOR SHALL COMPLY WITH AASHTO M-180 CLASS A, TYPE 2 EXCEPT WHERE IN CONFLICT WITH THIS DETAIL.

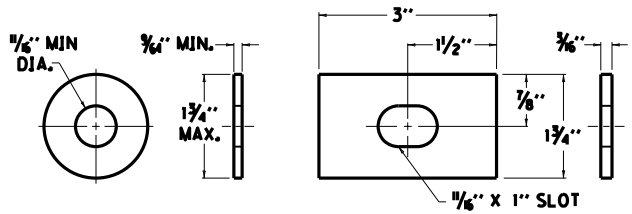

ROUND WASHER AND RECTANGULAR PLATE WASHER

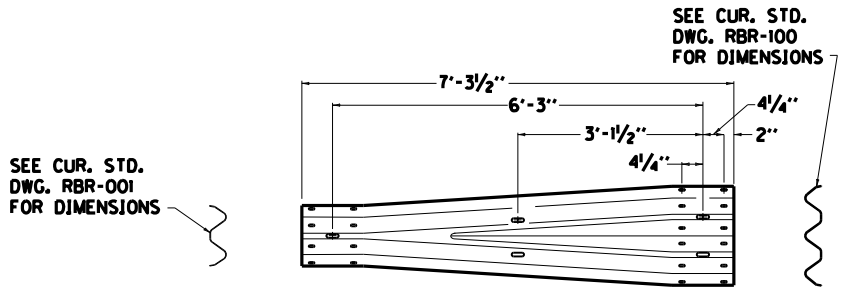

THRIE BEAM TO "W" BEAM CONNECTOR 2

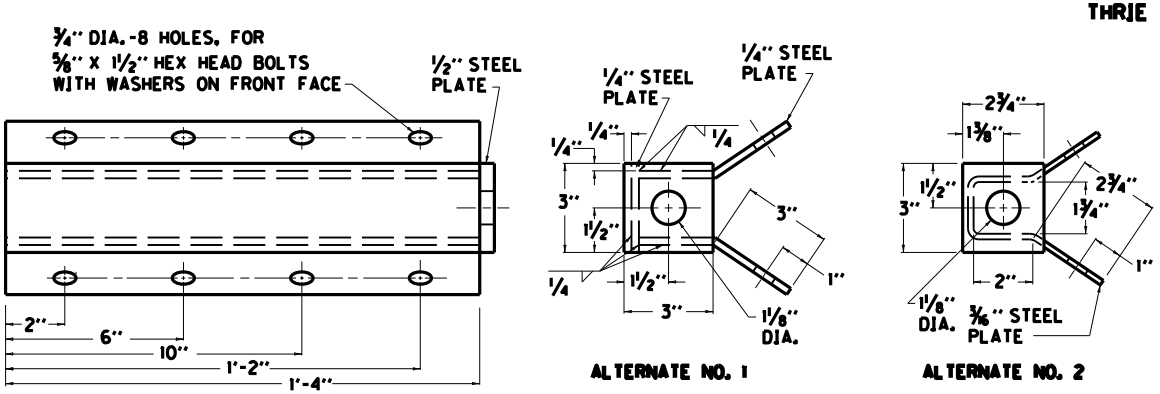

ALTERNATE NO. 1

ALTERNATE NO. 2

RAIL ANCHOR ASSEMBLY

KENTUCKY
DEPARTMENT OF HIGHWAYS

GUARDRAIL COMPONENTS

SUBMITTED TEBM DIVISION OF DESIGN 6-15-2012 DATE

008

COUNTY OF	ITEM NO.	SHEET NO.

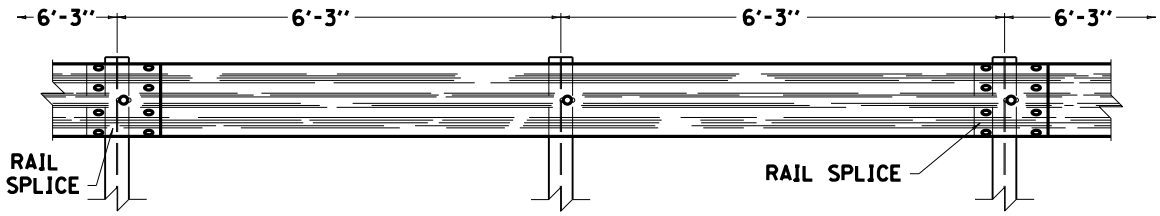

ELEVATION VIEW

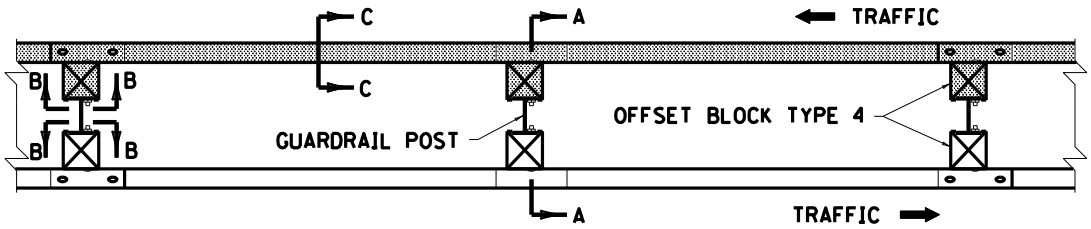

PLAN VIEW
(DOUBLE FACE RAIL OR SINGLE FACE RAIL)

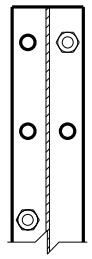

SECTION B-B

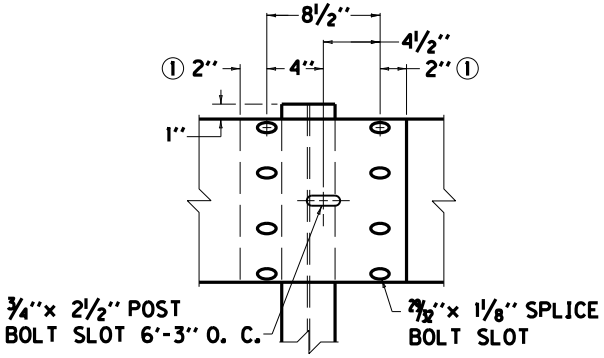

RAIL SPLICE ②

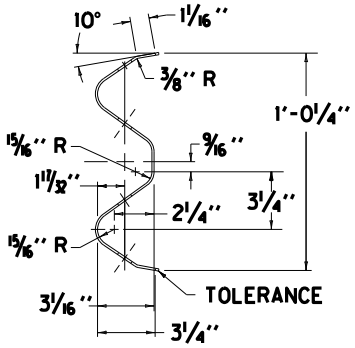

SECTION C-C
(RAIL CORRUGATED
SHEET STEEL BEAM)

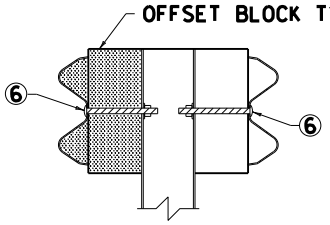

SECTION A-A
DOUBLE FACE RAIL WITH
STEEL POST (W6x9)
(TIMBER OFFSET BLOCK)

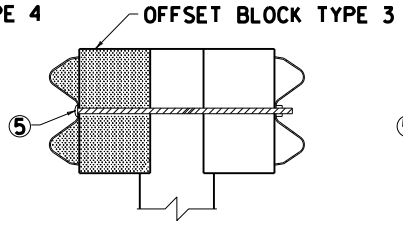

SECTION A-A
DOUBLE FACE RAIL WITH
ROUND TIMBER POST

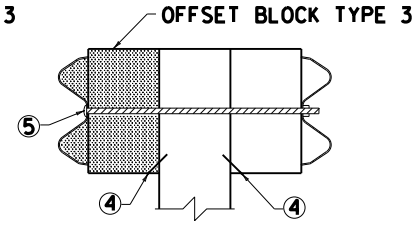

SECTION A-A
DOUBLE FACE RAIL WITH
TIMBER POST

NOTES

THE CONTRACT UNIT PRICE BID SHALL BE:
GUARDRAIL-STEEL W BEAM-SINGLE FACE - LIN. FT.
OR
GUARDRAIL-STEEL W BEAM-DOUBLE FACE - LIN. FT.

DIMENSIONAL TOLERANCES NOT SHOWN OR IMPLIED ARE INTENDED TO BE THOSE CONSISTENT WITH THE PROPER FUNCTIONING OF THE PART, INCLUDING ITS APPEARANCE AND ACCEPTED MANUFACTURING PRACTICES.

THE RAIL ELEMENT SHALL COMPLY WITH AASHTO M-180 -CLASS A, TYPE II.

ALL LAPS SHALL BE PLACED IN THE DIRECTION OF TRAFFIC FLOW.

① TOLERANCE + 1 1/4", -1/4"

② 8 -5/8" x 1 1/4" LONG BUTTON HEAD BOLTS AND HEX HEAD RECESS NUTS REQUIRED FOR EACH RAIL SPLICE.

③ LENGTH EQUALS POST AND BLOCK WIDTH PLUS: 2" FOR BOLT OR 2 1/4" FOR THREADED ROD.

④ GALVANIZED STEEL 10d COMMON COATED NAIL (DRIVE NAIL AT THE TOP OR BOTTOM CENTER OF BLOCK AND POST AFTER BOLT IS INSTALLED).

⑤ 5/8" x ③ STEEL THREADED ROD AND TWO (2) HEX HEAD NUTS OR 5/8" x ③ BUTTON OR HEX HEAD BOLT AND HEX HEAD NUT.

⑥ 5/8" x 8" BUTTON HEAD BOLT, HEX HEAD RECESS NUT AND ONE 5/8" ROUND WASHER (TYP.). BOLT SHALL HAVE A MINIMUM THREAD LENGTH OF 2".

REQUIRED FOR DOUBLE RAIL

7 BOTH 12'-6" AND 25' LENGTHS OF "W" BEAM GUARDRAIL SECTIONS WILL BE PERMITTED UNLESS OTHERWISE DIRECTED BY THE ENGINEER.

KENTUCKY
DEPARTMENT OF HIGHWAYS

STEEL BEAM GUARDRAIL ("W" BEAM)

SUBMITTED [signature] DIRECTOR DIVISION OF DESIGN — 12-11-12 DATE

012

FILE NAME: C:\PWWORK\JEFF.LAIL\D0512631\SEP1A 012.DGN
USER: Jeff.Lail
DATE PLOTTED: December 11, 2012
E-SHEET NAME:
CASEY COUNTY
023GR15100021 HSIP & BEO1

COUNTY OF	ITEM NO.	SHEET NO.

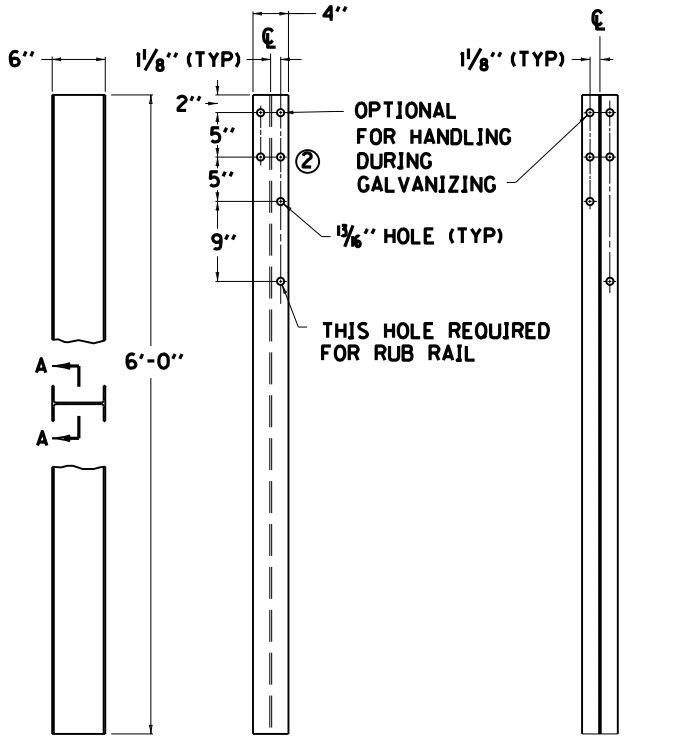

~ W6 X 9.0 STEEL POST ① ~

~ NOTES ~

① W6 X 8.5 IS AN ACCEPTABLE ALTERNATE.
② THESE HOLES REQUIRED FOR ATTACHING RAIL.

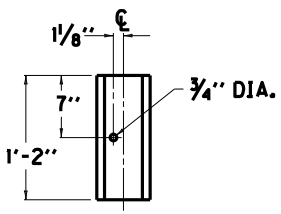

REAR ELEVATION

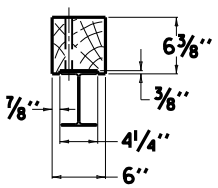

PLAN VIEW

OFFSET BLOCK TYPE 4
(TIMBER)
(FOR USE WITH STEEL POST ONLY)

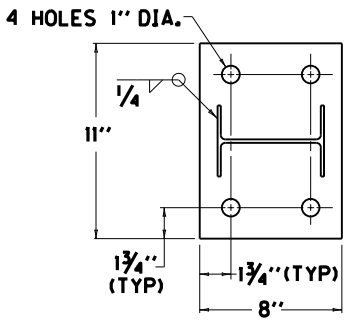

PLAN VIEW

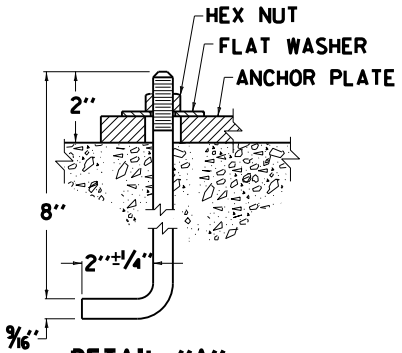

DETAIL "A"

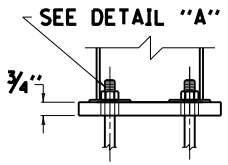

SIDE VIEW
ANCHOR PLATE

KENTUCKY
DEPARTMENT OF HIGHWAYS

GUARDRAIL POSTS

SUBMITTED [signature] 9-27-13
DATE

013

COUNTY OF	ITEM NO.	SHEET NO.

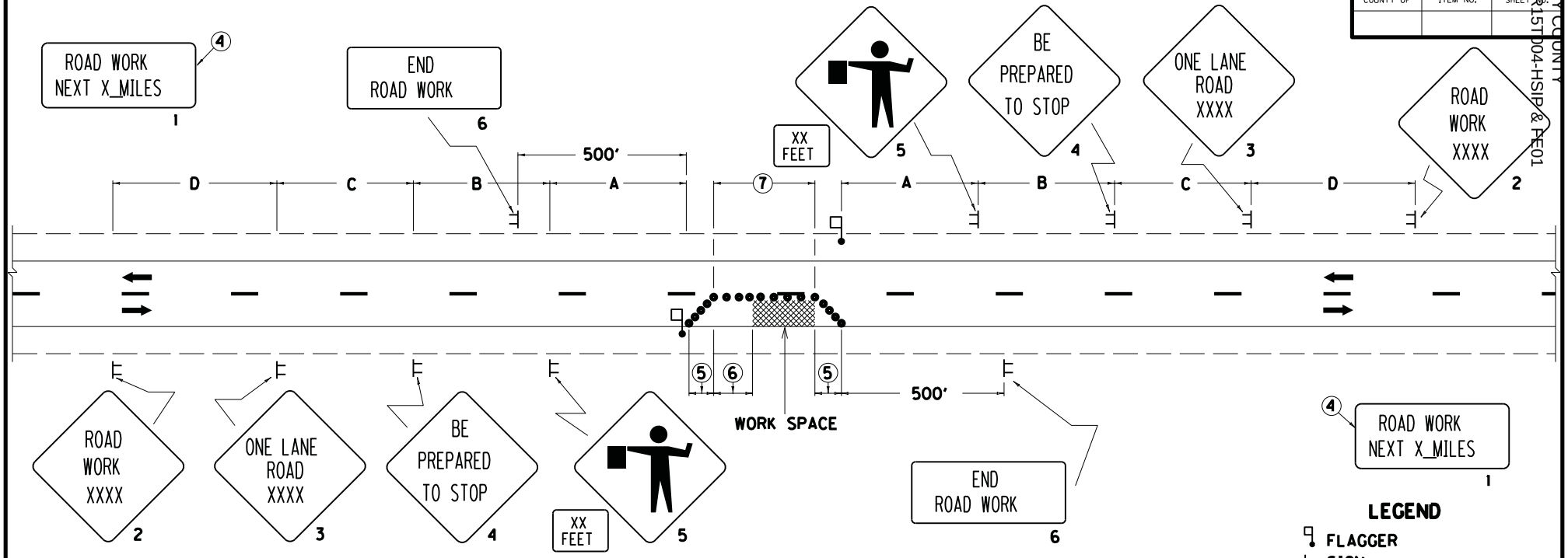

LEGEND

- FLAGGER
- SIGN
- CHANNELIZING DEVICES
  - CONES
  - DRUMS
  - TYPE II BARRICADES
  - TUBULAR MARKERS

1. THE SIZE OF SIGNS 2 THRU 5 SHALL BE 48" X 48" WITH 30" X 24" SUPPLEMENTAL PLAQUES FOR EXPRESSWAYS/FREEWAYS. THE MINIMUM SIZE OF SIGNS 2 THRU 5 SHALL BE 36" X 36" WITH 24" X 18" SUPPLEMENTAL PLAQUES FOR OTHER ROADWAYS. SIGN NOS. 1 AND 6 SHALL BE 48" X 24" FOR EXPRESSWAYS/FREEWAYS AND 36" X 18" FOR OTHER ROADWAYS. A FREEWAY SHALL BE DEFINED AS A DIVIDED HIGHWAY WITH FULL CONTROL OF ACCESS. AN EXPRESSWAY SHALL BE DEFINED AS A DIVIDED HIGHWAY WITH PARTIAL CONTROL OF ACCESS.
2. THE FLAGGERS SHALL BE IN SIGHT OF EACH OTHER OR IN DIRECT COMMUNICATION AT ALL TIMES. FLAGGER STATIONS SHALL BE LOCATED FAR ENOUGH IN ADVANCE OF THE ACTIVITY AREA SO THAT APPROACHING ROAD USERS WILL HAVE SUFFICIENT DISTANCE TO STOP BEFORE ENTERING THE WORK SPACE (REFER TO TABLE 6C-2 OF THE MUTCD). ILLUMINATION SHALL BE PROVIDED TO MARK FLAGGER STATIONS AT NIGHT.
3. DRUMS OR TYPE II BARRICADES SHALL BE USED IN LIEU OF CONES OR TUBULAR MARKERS IF CLOSURE EXTENDS INTO NIGHTTIME HOURS.
4. SIGN NO. 1 SHOULD BE INSTALLED AT THE LIMITS OF THE PROJECT WHEN THE CONSTRUCTION ZONE IS LONGER THAN TWO MILES IN LENGTH. THE DISTANCE SHOWN SHALL BE STATED TO THE NEAREST WHOLE MILE.
5. TAPERS SHALL BE 50' (MIN) TO 100' (MAX) IN LENGTH. SPACING OF CHANNELIZING DEVICES SHOULD BE 20' THRU THE TAPER AREAS.
6. BUFFER SPACE (OPTIONAL). IF USED, THE BUFFER SPACE SHOULD BE EXTENDED SO THAT THE TWO-WAY TRAFFIC TAPER IS PLACED BEFORE A HORIZONTAL OR CREST VERTICAL CURVE TO PROVIDE ADEQUATE SIGHT DISTANCE FOR THE FLAGGER AND A QUEUE OF STOPPED VEHICLES.
7. SPACING OF CHANNELIZING DEVICES THRU THE ACTIVITY AREA SHOULD BE 80'. ON ROADWAYS WITH WIDTHS LESS THAN 20 FEET, CHANNELIZING DEVICES MAY BE OMITTED THRU THE ACTIVITY AREA BASED ON ENGINEERING JUDGMENT.
8. WHEN NIGHTTIME WORK IS BEING PERFORMED, FLOODLIGHTS SHOULD BE USED TO ILLUMINATE THE WORK AREA.

DRAWING NOT TO SCALE

USE WITH CURRENT
STD. DWG TTD-110

APPLICATION

THIS DRAWING APPLIES TO LANE CLOSURES ON TWO-LANE, TWO DIRECTION HIGHWAYS.

SIGNING AND SPACING TABLE				
ROAD TYPE	A	B	C	D
EXPRESSWAY/ FREEWAY	1000'	500'	1100'	2600'
SP. LT. ≥ 45 MPH*	500'	500'	500'	1100'
SP. LT. ≤ 40 MPH*	250'	250'	250'	250'

*NOTE: USE NORMAL POSTED SPEED LIMIT

KENTUCKY
DEPARTMENT OF HIGHWAYS

LANE CLOSURE
TWO-LANE HIGHWAY

SUBMITTED R. Jeffrey Wolfe DATE 8-29-13

017

FILE NAME: C:\PWWORK\JEFF.LAIL\D05\263\SEP1A 017.DGN
USER: Jeff.Lail
DATE PLOTTED: August 29, 2013
E-SHEET NAME:
MicroStation v8.11.7.180

COUNTY OF	ITEM NO.	SHEET NO.

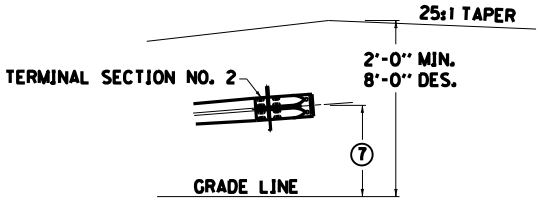

PLAN VIEW

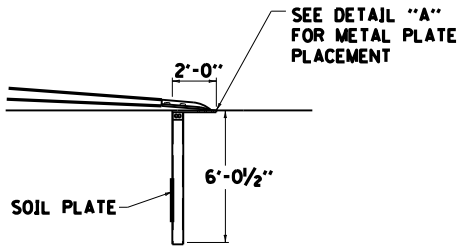

ELEVATION VIEW

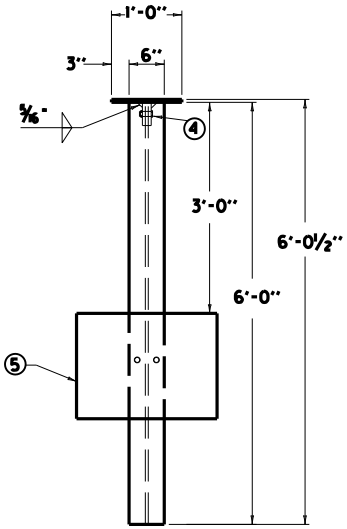

SIDE VIEW

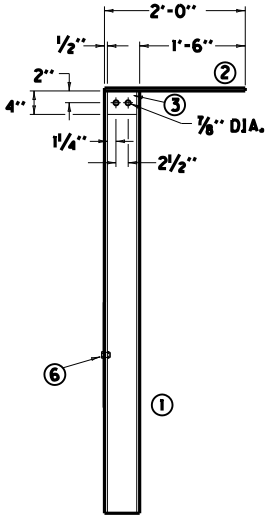

FRONT VIEW

DETAIL "A"

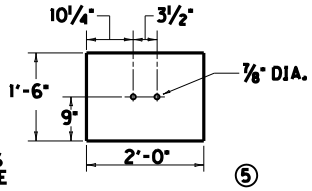

SOIL PLATE

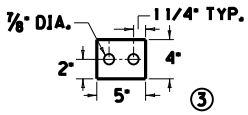

TAB PLATE

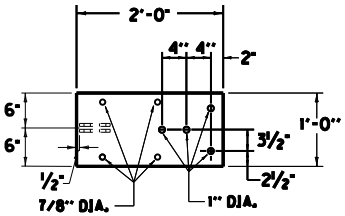

ANCHOR PLATE ASSMEBLY ②

USE WITH CUR. STD. DWG. RBR-050

METHOD OF MEASUREMENT AND BASIS OF PAYMENT

GUARDRAIL END TREATMENT TYPE 7 SHALL BE TO THE PAY LIMITS AS DETAILED AND THE CONTRACT UNIT PRICE EACH SHALL INCLUDE TERMINAL SECTION NO. 2, STEEL "W" BEAM GUARDRAIL (SINGLE FACE), GUARDRAIL POSTS M1, STEEL ANCHOR PLATE AND POST, SOIL PLATE, TAB PLATES, EXCAVATION, LABOR, HARDWARE AND ALL INCIDENTALS NECESSARY FOR THE INSTALLATION.

BID ITEM AND UNIT TO BID:
GUARDRAIL END TREATMENT TYPE 7 - EACH

CONSTRUCTION REQUIREMENTS

SPLICE BOLTS AT TERMINAL SECTION NO. 2 SHALL BE LOOSELY TIGHTENED AND CENTERED TO ALLOW MAXIMUM MOVEMENT DUE TO EXPANSION. ONE (1) 11/16" ROUND WASHER AND (1) RECTANGULAR PLATE WASHER REQUIRED FOR EACH SPLICE BOLT, AT TERMINAL SECTION NO. 2.

7. THE DESIREABLE OFFSET DISTANCE FROM THE NORMAL GUARDRAIL LINE SHALL BE 4'-0". THE MINIMUM OFFSET DISTANCE FROM THE NORMAL GUARDRAIL LINE IS ZERO FEET.

8. SEE CURRENT STD. DWG. RBR-001, RBR-005, RBR-010 AND RBR-015 FOR APPLICABLE DETAILS AND SPECIFICATIONS.

9. LEAVE CLEARNACE IN BETWEEN TAB PLATES FOR GALVANIZED W6 x 15 W-BEAM POST.

BILL OF MATERIAL

NO.	QTY.	DESCRIPTION
1	1	W6x15 W-BEAM
2	1	2' x 1' x ½" ANCHOR PLATE ASSEMBLY
3	2	4" x 5" x ½" TAB PLATE
4	2	¾" DIA. x 2½" HEAVY HEX HD BOLT w/NUT & (2) FLAT WASHERS
5	1	2' x 18" x ¼" SOIL PLATE
6	2	¾" DIA. x 2" HEAVY HEX HD BOLT w/NUT & (2) FLAT WASHERS

KENTUCKY
DEPARTMENT OF HIGHWAYS

GUARDRAIL END TREATMENT TYPE 7 ALTERNATE ANCHOR

SUBMITTED: William P. Stakel 1-15-15 DATE

021

FILE NAME: C:\USERS\JEFF.LAIL\DESKTOP\SEPIA 021.DGN
USER: Jeff.Lail
DATE PLOTTED: February 2, 2015
E-SHEET NAME:
MicroStation v8.11.7.443

COUNTY OF	ITEM NO.	SHEET NO.

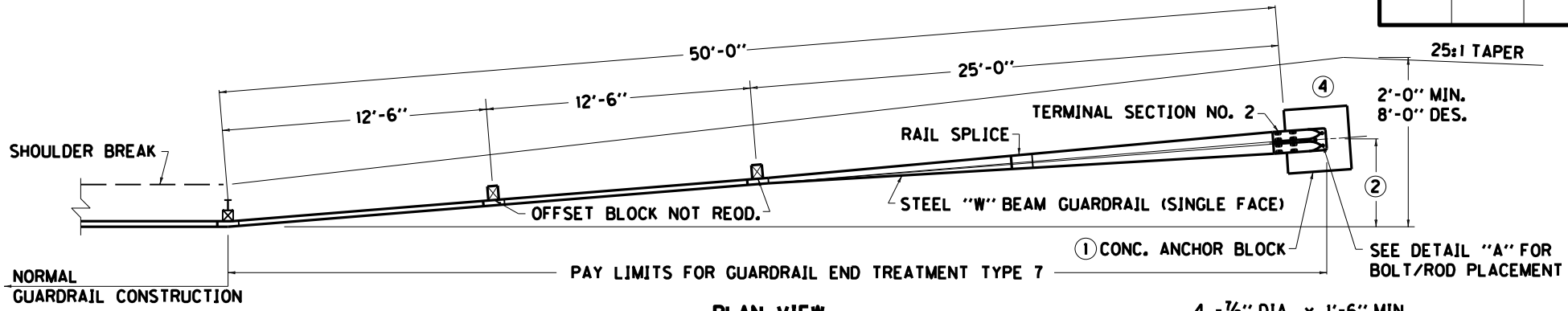

PLAN VIEW

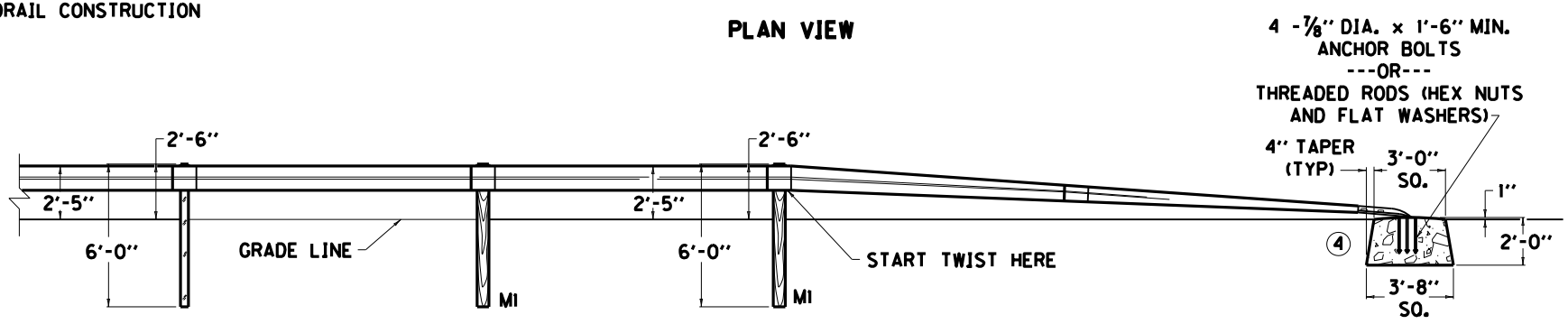

ELEVATION VIEW

NOTES

METHOD OF MEASUREMENT AND BASIS OF PAYMENT

GUARDRAIL END TREATMENT TYPE 7 SHALL BE TO THE PAY LIMITS AS DETAILED AND THE CONTRACT UNIT PRICE EACH SHALL INCLUDE TERMINAL SECTION NO. 2, STEEL "W" BEAM GUARDRAIL (SINGLE FACE), GUARDRAIL POSTS M1, CONCRETE ANCHOR BLOCK, EXCAVATION, LABOR, HARDWARE AND INCIDENTALS NECESSARY FOR THE INSTALLATION.

BID ITEM AND UNIT TO BID:
GUARDRAIL END TREATMENT TYPE 7 - EACH

CONSTRUCTION REQUIREMENTS

SPLICE BOLTS AT TERMINAL SECTION NO. 2 SHALL BE LOOSELY TIGHTENED AND CENTERED TO ALLOW MAXIMUM MOVEMENT DUE TO EXPANSION. ONE (1) 11/16" ROUND WASHER AND ONE (1) RECTANGULAR PLATE WASHER REQUIRED FOR EACH SPLICE BOLT, AT TERMINAL SECTION NO. 2.

(1) THE CONCRETE ANCHOR BLOCK MAY BE PRECAST OR CAST-IN-PLACE. WHEN THE CONCRETE ANCHOR BLOCK IS CAST-IN-PLACE FORMING OF THE SIDES SHALL BE REQUIRED.

(2) THE DESIREABLE OFFSET DISTANCE FROM THE NORMAL GUARDRAIL LINE SHALL BE 4'-0". THE MINIMUM OFFSET DISTANCE FROM THE NORMAL GUARDRAIL LINE IS ZERO FEET.

MATERIAL REQUIREMENTS

SEE CURRENT STD. DWG. RBR-001, RBR-005, RBR-010, AND RBR-015 FOR APPLICABLE DETAILS AND SPECIFICATIONS.

APPROX. QUANTITY FOR ANCHOR BLOCK: 0.83 CU. YD. CLASS "A" CONCRETE FOR TYPE 7 INSTALLATON.

3. THIS GUARDRAIL END TREATMENT IS NOT FOR USE ON APPROACH END ON HIGH SPEED NHS

(4) SEE STANDARD DRAWING RBR-051 FOR ALTERNATE END ANCHOR.

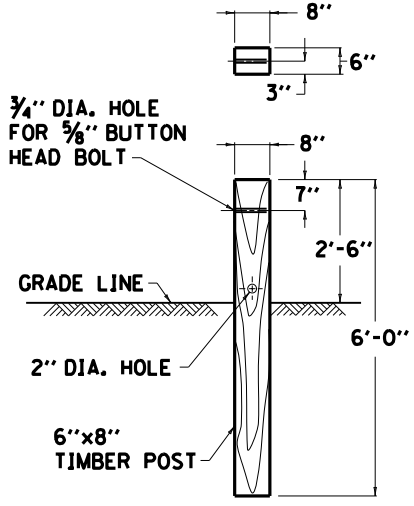

M1 POST DETAIL

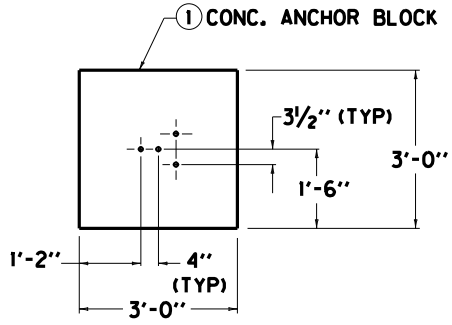

DETAIL "A"

USE WITH CUR. STD. DWG. RBR-051

KENTUCKY
DEPARTMENT OF HIGHWAYS

GUARDRAIL END TREATMENT TYPE 7

SUBMITTED William S. Haskel 7-22-14
DATE

022

FILE NAME: C:\USERS\JEFF.LAIL\DESKTOP\SEPIA 022.DGN
USER: jeff.lail
DATE PLOTTED: July 30, 2014
E-SHEET NAME:
MicroStation v8.11.7.443

PART III

EMPLOYMENT, WAGE AND RECORD REQUIREMENTS

FHWA-1273 -- Revised May 1, 2012

REQUIRED CONTRACT PROVISIONS
FEDERAL-AID CONSTRUCTION CONTRACTS

I. General
II. Nondiscrimination
III. Nonsegregated Facilities
IV. Davis-Bacon and Related Act Provisions
V. Contract Work Hours and Safety Standards Act Provisions
VI. Subletting or Assigning the Contract
VII. Safety: Accident Prevention
VIII. False Statements Concerning Highway Projects
IX. Implementation of Clean Air Act and Federal Water Pollution Control Act
X. Compliance with Governmentwide Suspension and Debarment Requirements
XI. Certification Regarding Use of Contract Funds for Lobbying

ATTACHMENTS

A. Employment and Materials Preference for Appalachian Development Highway System or Appalachian Local Access Road Contracts (included in Appalachian contracts only)

I. GENERAL

1. Form FHWA-1273 must be physically incorporated in each construction contract funded under Title 23 (excluding emergency contracts solely intended for debris removal). The contractor (or subcontractor) must insert this form in each subcontract and further require its inclusion in all lower tier subcontracts (excluding purchase orders, rental agreements and other agreements for supplies or services).

The applicable requirements of Form FHWA-1273 are incorporated by reference for work done under any purchase order, rental agreement or agreement for other services. The prime contractor shall be responsible for compliance by any subcontractor, lower-tier subcontractor or service provider.

Form FHWA-1273 must be included in all Federal-aid design-build contracts, in all subcontracts and in lower tier subcontracts (excluding subcontracts for design services, purchase orders, rental agreements and other agreements for supplies or services). The design-builder shall be responsible for compliance by any subcontractor, lower-tier subcontractor or service provider.

Contracting agencies may reference Form FHWA-1273 in bid proposal or request for proposal documents, however, the Form FHWA-1273 must be physically incorporated (not referenced) in all contracts, subcontracts and lower-tier subcontracts (excluding purchase orders, rental agreements and other agreements for supplies or services related to a construction contract).

2. Subject to the applicability criteria noted in the following sections, these contract provisions shall apply to all work performed on the contract by the contractor's own organization and with the assistance of workers under the contractor's immediate superintendence and to all work performed on the contract by piecework, station work, or by subcontract.

3. A breach of any of the stipulations contained in these Required Contract Provisions may be sufficient grounds for withholding of progress payments, withholding of final payment, termination of the contract, suspension / debarment or any other action determined to be appropriate by the contracting agency and FHWA.

4. Selection of Labor: During the performance of this contract, the contractor shall not use convict labor for any purpose within the limits of a construction project on a Federal-aid highway unless it is labor performed by convicts who are on parole, supervised release, or probation. The term Federal-aid highway does not include roadways functionally classified as local roads or rural minor collectors.

II. NONDISCRIMINATION

The provisions of this section related to 23 CFR Part 230 are applicable to all Federal-aid construction contracts and to all related construction subcontracts of $10,000 or more. The provisions of 23 CFR Part 230 are not applicable to material supply, engineering, or architectural service contracts.

In addition, the contractor and all subcontractors must comply with the following policies: Executive Order 11246, 41 CFR 60, 29 CFR 1625-1627, Title 23 USC Section 140, the Rehabilitation Act of 1973, as amended (29 USC 794), Title VI of the Civil Rights Act of 1964, as amended, and related regulations including 49 CFR Parts 21, 26 and 27; and 23 CFR Parts 200, 230, and 633.

The contractor and all subcontractors must comply with: the requirements of the Equal Opportunity Clause in 41 CFR 60-1.4(b) and, for all construction contracts exceeding $10,000, the Standard Federal Equal Employment Opportunity Construction Contract Specifications in 41 CFR 60-4.3.

Note: The U.S. Department of Labor has exclusive authority to determine compliance with Executive Order 11246 and the policies of the Secretary of Labor including 41 CFR 60, and 29 CFR 1625-1627. The contracting agency and the FHWA have the authority and the responsibility to ensure compliance with Title 23 USC Section 140, the Rehabilitation Act of 1973, as amended (29 USC 794), and Title VI of the Civil Rights Act of 1964, as amended, and related regulations including 49 CFR Parts 21, 26 and 27; and 23 CFR Parts 200, 230, and 633.

The following provision is adopted from 23 CFR 230, Appendix A, with appropriate revisions to conform to the U.S. Department of Labor (US DOL) and FHWA requirements.

1. Equal Employment Opportunity: Equal employment opportunity (EEO) requirements not to discriminate and to take affirmative action to assure equal opportunity as set forth under laws, executive orders, rules, regulations (28 CFR 35, 29 CFR 1630, 29 CFR 1625-1627, 41 CFR 60 and 49 CFR 27) and orders of the Secretary of Labor as modified by the provisions prescribed herein, and imposed pursuant to 23 U.S.C. 140 shall constitute the EEO and specific affirmative action standards for the contractor's project activities under

this contract. The provisions of the Americans with Disabilities Act of 1990 (42 U.S.C. 12101 et seq.) set forth under 28 CFR 35 and 29 CFR 1630 are incorporated by reference in this contract. In the execution of this contract, the contractor agrees to comply with the following minimum specific requirement activities of EEO:

a. The contractor will work with the contracting agency and the Federal Government to ensure that it has made every good faith effort to provide equal opportunity with respect to all of its terms and conditions of employment and in their review of activities under the contract.

b. The contractor will accept as its operating policy the following statement:

"It is the policy of this Company to assure that applicants are employed, and that employees are treated during employment, without regard to their race, religion, sex, color, national origin, age or disability. Such action shall include: employment, upgrading, demotion, or transfer; recruitment or recruitment advertising; layoff or termination; rates of pay or other forms of compensation; and selection for training, including apprenticeship, pre-apprenticeship, and/or on-the-job training."

2. EEO Officer: The contractor will designate and make known to the contracting officers an EEO Officer who will have the responsibility for and must be capable of effectively administering and promoting an active EEO program and who must be assigned adequate authority and responsibility to do so.

3. Dissemination of Policy: All members of the contractor's staff who are authorized to hire, supervise, promote, and discharge employees, or who recommend such action, or who are substantially involved in such action, will be made fully cognizant of, and will implement, the contractor's EEO policy and contractual responsibilities to provide EEO in each grade and classification of employment. To ensure that the above agreement will be met, the following actions will be taken as a minimum:

a. Periodic meetings of supervisory and personnel office employees will be conducted before the start of work and then not less often than once every six months, at which time the contractor's EEO policy and its implementation will be reviewed and explained. The meetings will be conducted by the EEO Officer.

b. All new supervisory or personnel office employees will be given a thorough indoctrination by the EEO Officer, covering all major aspects of the contractor's EEO obligations within thirty days following their reporting for duty with the contractor.

c. All personnel who are engaged in direct recruitment for the project will be instructed by the EEO Officer in the contractor's procedures for locating and hiring minorities and women.

d. Notices and posters setting forth the contractor's EEO policy will be placed in areas readily accessible to employees, applicants for employment and potential employees.

e. The contractor's EEO policy and the procedures to implement such policy will be brought to the attention of employees by means of meetings, employee handbooks, or other appropriate means.

4. Recruitment: When advertising for employees, the contractor will include in all advertisements for employees the notation: "An Equal Opportunity Employer." All such advertisements will be placed in publications having a large circulation among minorities and women in the area from which the project work force would normally be derived.

a. The contractor will, unless precluded by a valid bargaining agreement, conduct systematic and direct recruitment through public and private employee referral sources likely to yield qualified minorities and women. To meet this requirement, the contractor will identify sources of potential minority group employees, and establish with such identified sources procedures whereby minority and women applicants may be referred to the contractor for employment consideration.

b. In the event the contractor has a valid bargaining agreement providing for exclusive hiring hall referrals, the contractor is expected to observe the provisions of that agreement to the extent that the system meets the contractor's compliance with EEO contract provisions. Where implementation of such an agreement has the effect of discriminating against minorities or women, or obligates the contractor to do the same, such implementation violates Federal nondiscrimination provisions.

c. The contractor will encourage its present employees to refer minorities and women as applicants for employment. Information and procedures with regard to referring such applicants will be discussed with employees.

5. Personnel Actions: Wages, working conditions, and employee benefits shall be established and administered, and personnel actions of every type, including hiring, upgrading, promotion, transfer, demotion, layoff, and termination, shall be taken without regard to race, color, religion, sex, national origin, age or disability. The following procedures shall be followed:

a. The contractor will conduct periodic inspections of project sites to insure that working conditions and employee facilities do not indicate discriminatory treatment of project site personnel.

b. The contractor will periodically evaluate the spread of wages paid within each classification to determine any evidence of discriminatory wage practices.

c. The contractor will periodically review selected personnel actions in depth to determine whether there is evidence of discrimination. Where evidence is found, the contractor will promptly take corrective action. If the review indicates that the discrimination may extend beyond the actions reviewed, such corrective action shall include all affected persons.

d. The contractor will promptly investigate all complaints of alleged discrimination made to the contractor in connection with its obligations under this contract, will attempt to resolve such complaints, and will take appropriate corrective action within a reasonable time. If the investigation indicates that the discrimination may affect persons other than the complainant, such corrective action shall include such other persons. Upon completion of each investigation, the contractor will inform every complainant of all of their avenues of appeal.

6. Training and Promotion:

a. The contractor will assist in locating, qualifying, and increasing the skills of minorities and women who are

applicants for employment or current employees. Such efforts should be aimed at developing full journey level status employees in the type of trade or job classification involved.

b. Consistent with the contractor's work force requirements and as permissible under Federal and State regulations, the contractor shall make full use of training programs, i.e., apprenticeship, and on-the-job training programs for the geographical area of contract performance. In the event a special provision for training is provided under this contract, this subparagraph will be superseded as indicated in the special provision. The contracting agency may reserve training positions for persons who receive welfare assistance in accordance with 23 U.S.C. 140(a).

c. The contractor will advise employees and applicants for employment of available training programs and entrance requirements for each.

d. The contractor will periodically review the training and promotion potential of employees who are minorities and women and will encourage eligible employees to apply for such training and promotion.

7. Unions: If the contractor relies in whole or in part upon unions as a source of employees, the contractor will use good faith efforts to obtain the cooperation of such unions to increase opportunities for minorities and women. Actions by the contractor, either directly or through a contractor's association acting as agent, will include the procedures set forth below:

a. The contractor will use good faith efforts to develop, in cooperation with the unions, joint training programs aimed toward qualifying more minorities and women for membership in the unions and increasing the skills of minorities and women so that they may qualify for higher paying employment.

b. The contractor will use good faith efforts to incorporate an EEO clause into each union agreement to the end that such union will be contractually bound to refer applicants without regard to their race, color, religion, sex, national origin, age or disability.

c. The contractor is to obtain information as to the referral practices and policies of the labor union except that to the extent such information is within the exclusive possession of the labor union and such labor union refuses to furnish such information to the contractor, the contractor shall so certify to the contracting agency and shall set forth what efforts have been made to obtain such information.

d. In the event the union is unable to provide the contractor with a reasonable flow of referrals within the time limit set forth in the collective bargaining agreement, the contractor will, through independent recruitment efforts, fill the employment vacancies without regard to race, color, religion, sex, national origin, age or disability; making full efforts to obtain qualified and/or qualifiable minorities and women. The failure of a union to provide sufficient referrals (even though it is obligated to provide exclusive referrals under the terms of a collective bargaining agreement) does not relieve the contractor from the requirements of this paragraph. In the event the union referral practice prevents the contractor from meeting the obligations pursuant to Executive Order 11246, as amended, and these special provisions, such contractor shall immediately notify the contracting agency.

8. Reasonable Accommodation for Applicants / Employees with Disabilities: The contractor must be familiar with the requirements for and comply with the Americans with Disabilities Act and all rules and regulations established there under. Employers must provide reasonable accommodation in all employment activities unless to do so would cause an undue hardship.

9. Selection of Subcontractors, Procurement of Materials and Leasing of Equipment: The contractor shall not discriminate on the grounds of race, color, religion, sex, national origin, age or disability in the selection and retention of subcontractors, including procurement of materials and leases of equipment. The contractor shall take all necessary and reasonable steps to ensure nondiscrimination in the administration of this contract.

a. The contractor shall notify all potential subcontractors and suppliers and lessors of their EEO obligations under this contract.

b. The contractor will use good faith efforts to ensure subcontractor compliance with their EEO obligations.

10. Assurance Required by 49 CFR 26.13(b):

a. The requirements of 49 CFR Part 26 and the State DOT's U.S. DOT-approved DBE program are incorporated by reference.

b. The contractor or subcontractor shall not discriminate on the basis of race, color, national origin, or sex in the performance of this contract. The contractor shall carry out applicable requirements of 49 CFR Part 26 in the award and administration of DOT-assisted contracts. Failure by the contractor to carry out these requirements is a material breach of this contract, which may result in the termination of this contract or such other remedy as the contracting agency deems appropriate.

11. Records and Reports: The contractor shall keep such records as necessary to document compliance with the EEO requirements. Such records shall be retained for a period of three years following the date of the final payment to the contractor for all contract work and shall be available at reasonable times and places for inspection by authorized representatives of the contracting agency and the FHWA.

a. The records kept by the contractor shall document the following:

(1) The number and work hours of minority and non-minority group members and women employed in each work classification on the project;

(2) The progress and efforts being made in cooperation with unions, when applicable, to increase employment opportunities for minorities and women; and

(3) The progress and efforts being made in locating, hiring, training, qualifying, and upgrading minorities and women;

b. The contractors and subcontractors will submit an annual report to the contracting agency each July for the duration of the project, indicating the number of minority, women, and non-minority group employees currently engaged in each work classification required by the contract work. This information is to be reported on Form FHWA-1391. The staffing data should represent the project work force on board in all or any part of the last payroll period preceding the end of July. If on-the-job training is being required by special provision, the contractor

will be required to collect and report training data. The employment data should reflect the work force on board during all or any part of the last payroll period preceding the end of July.

III. NONSEGREGATED FACILITIES

This provision is applicable to all Federal-aid construction contracts and to all related construction subcontracts of $10,000 or more.

The contractor must ensure that facilities provided for employees are provided in such a manner that segregation on the basis of race, color, religion, sex, or national origin cannot result. The contractor may neither require such segregated use by written or oral policies nor tolerate such use by employee custom. The contractor's obligation extends further to ensure that its employees are not assigned to perform their services at any location, under the contractor's control, where the facilities are segregated. The term "facilities" includes waiting rooms, work areas, restaurants and other eating areas, time clocks, restrooms, washrooms, locker rooms, and other storage or dressing areas, parking lots, drinking fountains, recreation or entertainment areas, transportation, and housing provided for employees. The contractor shall provide separate or single-user restrooms and necessary dressing or sleeping areas to assure privacy between sexes.

IV. DAVIS-BACON AND RELATED ACT PROVISIONS

This section is applicable to all Federal-aid construction projects exceeding $2,000 and to all related subcontracts and lower-tier subcontracts (regardless of subcontract size). The requirements apply to all projects located within the right-of-way of a roadway that is functionally classified as Federal-aid highway. This excludes roadways functionally classified as local roads or rural minor collectors, which are exempt. Contracting agencies may elect to apply these requirements to other projects.

The following provisions are from the U.S. Department of Labor regulations in 29 CFR 5.5 “Contract provisions and related matters” with minor revisions to conform to the FHWA-1273 format and FHWA program requirements.

1. Minimum wages

a. All laborers and mechanics employed or working upon the site of the work, will be paid unconditionally and not less often than once a week, and without subsequent deduction or rebate on any account (except such payroll deductions as are permitted by regulations issued by the Secretary of Labor under the Copeland Act (29 CFR part 3)), the full amount of wages and bona fide fringe benefits (or cash equivalents thereof) due at time of payment computed at rates not less than those contained in the wage determination of the Secretary of Labor which is attached hereto and made a part hereof, regardless of any contractual relationship which may be alleged to exist between the contractor and such laborers and mechanics.

Contributions made or costs reasonably anticipated for bona fide fringe benefits under section 1(b)(2) of the Davis-Bacon Act on behalf of laborers or mechanics are considered wages paid to such laborers or mechanics, subject to the provisions of paragraph 1.d. of this section; also, regular contributions made or costs incurred for more than a weekly period (but not less often than quarterly) under plans, funds, or programs which cover the particular weekly period, are deemed to be constructively made or incurred during such weekly period. Such laborers and mechanics shall be paid the appropriate wage rate and fringe benefits on the wage determination for the classification of work actually performed, without regard to skill, except as provided in 29 CFR 5.5(a)(4). Laborers or mechanics performing work in more than one classification may be compensated at the rate specified for each classification for the time actually worked therein: Provided, That the employer's payroll records accurately set forth the time spent in each classification in which work is performed. The wage determination (including any additional classification and wage rates conformed under paragraph 1.b. of this section) and the Davis-Bacon poster (WH–1321) shall be posted at all times by the contractor and its subcontractors at the site of the work in a prominent and accessible place where it can be easily seen by the workers.

b.(1) The contracting officer shall require that any class of laborers or mechanics, including helpers, which is not listed in the wage determination and which is to be employed under the contract shall be classified in conformance with the wage determination. The contracting officer shall approve an additional classification and wage rate and fringe benefits therefore only when the following criteria have been met:

(i) The work to be performed by the classification requested is not performed by a classification in the wage determination; and

(ii) The classification is utilized in the area by the construction industry; and

(iii) The proposed wage rate, including any bona fide fringe benefits, bears a reasonable relationship to the wage rates contained in the wage determination.

(2) If the contractor and the laborers and mechanics to be employed in the classification (if known), or their representatives, and the contracting officer agree on the classification and wage rate (including the amount designated for fringe benefits where appropriate), a report of the action taken shall be sent by the contracting officer to the Administrator of the Wage and Hour Division, Employment Standards Administration, U.S. Department of Labor, Washington, DC 20210. The Administrator, or an authorized representative, will approve, modify, or disapprove every additional classification action within 30 days of receipt and so advise the contracting officer or will notify the contracting officer within the 30-day period that additional time is necessary.

(3) In the event the contractor, the laborers or mechanics to be employed in the classification or their representatives, and the contracting officer do not agree on the proposed classification and wage rate (including the amount designated for fringe benefits, where appropriate), the contracting officer shall refer the questions, including the views of all interested parties and the recommendation of the contracting officer, to the Wage and Hour Administrator for determination. The Wage and Hour Administrator, or an authorized representative, will issue a determination within 30 days of receipt and so advise the contracting officer or

will notify the contracting officer within the 30-day period that additional time is necessary.

(4) The wage rate (including fringe benefits where appropriate) determined pursuant to paragraphs 1.b.(2) or 1.b.(3) of this section, shall be paid to all workers performing work in the classification under this contract from the first day on which work is performed in the classification.

c. Whenever the minimum wage rate prescribed in the contract for a class of laborers or mechanics includes a fringe benefit which is not expressed as an hourly rate, the contractor shall either pay the benefit as stated in the wage determination or shall pay another bona fide fringe benefit or an hourly cash equivalent thereof.

d. If the contractor does not make payments to a trustee or other third person, the contractor may consider as part of the wages of any laborer or mechanic the amount of any costs reasonably anticipated in providing bona fide fringe benefits under a plan or program, Provided, That the Secretary of Labor has found, upon the written request of the contractor, that the applicable standards of the Davis-Bacon Act have been met. The Secretary of Labor may require the contractor to set aside in a separate account assets for the meeting of obligations under the plan or program.

2. Withholding

The contracting agency shall upon its own action or upon written request of an authorized representative of the Department of Labor, withhold or cause to be withheld from the contractor under this contract, or any other Federal contract with the same prime contractor, or any other federally-assisted contract subject to Davis-Bacon prevailing wage requirements, which is held by the same prime contractor, so much of the accrued payments or advances as may be considered necessary to pay laborers and mechanics, including apprentices, trainees, and helpers, employed by the contractor or any subcontractor the full amount of wages required by the contract. In the event of failure to pay any laborer or mechanic, including any apprentice, trainee, or helper, employed or working on the site of the work, all or part of the wages required by the contract, the contracting agency may, after written notice to the contractor, take such action as may be necessary to cause the suspension of any further payment, advance, or guarantee of funds until such violations have ceased.

3. Payrolls and basic records

a. Payrolls and basic records relating thereto shall be maintained by the contractor during the course of the work and preserved for a period of three years thereafter for all laborers and mechanics working at the site of the work. Such records shall contain the name, address, and social security number of each such worker, his or her correct classification, hourly rates of wages paid (including rates of contributions or costs anticipated for bona fide fringe benefits or cash equivalents thereof of the types described in section 1(b)(2)(B) of the Davis-Bacon Act), daily and weekly number of hours worked, deductions made and actual wages paid. Whenever the Secretary of Labor has found under 29 CFR 5.5(a)(1)(iv) that the wages of any laborer or mechanic include the amount of any costs reasonably anticipated in providing benefits under a plan or program described in section 1(b)(2)(B) of the Davis-Bacon Act, the contractor shall maintain records which show that the commitment to provide such benefits is enforceable, that the plan or program is financially responsible, and that the plan or program has been communicated in writing to the laborers or mechanics affected, and records which show the costs anticipated or the actual cost incurred in providing such benefits. Contractors employing apprentices or trainees under approved programs shall maintain written evidence of the registration of apprenticeship programs and certification of trainee programs, the registration of the apprentices and trainees, and the ratios and wage rates prescribed in the applicable programs.

b.(1) The contractor shall submit weekly for each week in which any contract work is performed a copy of all payrolls to the contracting agency. The payrolls submitted shall set out accurately and completely all of the information required to be maintained under 29 CFR 5.5(a)(3)(i), except that full social security numbers and home addresses shall not be included on weekly transmittals. Instead the payrolls shall only need to include an individually identifying number for each employee (e.g. , the last four digits of the employee's social security number). The required weekly payroll information may be submitted in any form desired. Optional Form WH–347 is available for this purpose from the Wage and Hour Division Web site at http://www.dol.gov/esa/whd/forms/wh347instr.htm or its successor site. The prime contractor is responsible for the submission of copies of payrolls by all subcontractors. Contractors and subcontractors shall maintain the full social security number and current address of each covered worker, and shall provide them upon request to the contracting agency for transmission to the State DOT, the FHWA or the Wage and Hour Division of the Department of Labor for purposes of an investigation or audit of compliance with prevailing wage requirements. It is not a violation of this section for a prime contractor to require a subcontractor to provide addresses and social security numbers to the prime contractor for its own records, without weekly submission to the contracting agency..

(2) Each payroll submitted shall be accompanied by a “Statement of Compliance,” signed by the contractor or subcontractor or his or her agent who pays or supervises the payment of the persons employed under the contract and shall certify the following:

(i) That the payroll for the payroll period contains the information required to be provided under §5.5 (a)(3)(ii) of Regulations, 29 CFR part 5, the appropriate information is being maintained under §5.5 (a)(3)(i) of Regulations, 29 CFR part 5, and that such information is correct and complete;

(ii) That each laborer or mechanic (including each helper, apprentice, and trainee) employed on the contract during the payroll period has been paid the full weekly wages earned, without rebate, either directly or indirectly, and that no deductions have been made either directly or indirectly from the full wages earned, other than permissible deductions as set forth in Regulations, 29 CFR part 3;

(iii) That each laborer or mechanic has been paid not less than the applicable wage rates and fringe benefits or cash equivalents for the classification of work performed, as specified in the applicable wage determination incorporated into the contract.

(3) The weekly submission of a properly executed certification set forth on the reverse side of Optional Form WH–347 shall satisfy the requirement for submission of the "Statement of Compliance" required by paragraph 3.b.(2) of this section.

(4) The falsification of any of the above certifications may subject the contractor or subcontractor to civil or criminal prosecution under section 1001 of title 18 and section 231 of title 31 of the United States Code.

c. The contractor or subcontractor shall make the records required under paragraph 3.a. of this section available for inspection, copying, or transcription by authorized representatives of the contracting agency, the State DOT, the FHWA, or the Department of Labor, and shall permit such representatives to interview employees during working hours on the job. If the contractor or subcontractor fails to submit the required records or to make them available, the FHWA may, after written notice to the contractor, the contracting agency or the State DOT, take such action as may be necessary to cause the suspension of any further payment, advance, or guarantee of funds. Furthermore, failure to submit the required records upon request or to make such records available may be grounds for debarment action pursuant to 29 CFR 5.12.

4. Apprentices and trainees

a. Apprentices (programs of the USDOL).

Apprentices will be permitted to work at less than the predetermined rate for the work they performed when they are employed pursuant to and individually registered in a bona fide apprenticeship program registered with the U.S. Department of Labor, Employment and Training Administration, Office of Apprenticeship Training, Employer and Labor Services, or with a State Apprenticeship Agency recognized by the Office, or if a person is employed in his or her first 90 days of probationary employment as an apprentice in such an apprenticeship program, who is not individually registered in the program, but who has been certified by the Office of Apprenticeship Training, Employer and Labor Services or a State Apprenticeship Agency (where appropriate) to be eligible for probationary employment as an apprentice.

The allowable ratio of apprentices to journeymen on the job site in any craft classification shall not be greater than the ratio permitted to the contractor as to the entire work force under the registered program. Any worker listed on a payroll at an apprentice wage rate, who is not registered or otherwise employed as stated above, shall be paid not less than the applicable wage rate on the wage determination for the classification of work actually performed. In addition, any apprentice performing work on the job site in excess of the ratio permitted under the registered program shall be paid not less than the applicable wage rate on the wage determination for the work actually performed. Where a contractor is performing construction on a project in a locality other than that in which its program is registered, the ratios and wage rates (expressed in percentages of the journeyman's hourly rate) specified in the contractor's or subcontractor's registered program shall be observed.

Every apprentice must be paid at not less than the rate specified in the registered program for the apprentice's level of progress, expressed as a percentage of the journeymen hourly rate specified in the applicable wage determination. Apprentices shall be paid fringe benefits in accordance with the provisions of the apprenticeship program. If the apprenticeship program does not specify fringe benefits, apprentices must be paid the full amount of fringe benefits listed on the wage determination for the applicable classification. If the Administrator determines that a different practice prevails for the applicable apprentice classification, fringes shall be paid in accordance with that determination.

In the event the Office of Apprenticeship Training, Employer and Labor Services, or a State Apprenticeship Agency recognized by the Office, withdraws approval of an apprenticeship program, the contractor will no longer be permitted to utilize apprentices at less than the applicable predetermined rate for the work performed until an acceptable program is approved.

b. Trainees (programs of the USDOL).

Except as provided in 29 CFR 5.16, trainees will not be permitted to work at less than the predetermined rate for the work performed unless they are employed pursuant to and individually registered in a program which has received prior approval, evidenced by formal certification by the U.S. Department of Labor, Employment and Training Administration.

The ratio of trainees to journeymen on the job site shall not be greater than permitted under the plan approved by the Employment and Training Administration.

Every trainee must be paid at not less than the rate specified in the approved program for the trainee's level of progress, expressed as a percentage of the journeyman hourly rate specified in the applicable wage determination. Trainees shall be paid fringe benefits in accordance with the provisions of the trainee program. If the trainee program does not mention fringe benefits, trainees shall be paid the full amount of fringe benefits listed on the wage determination unless the Administrator of the Wage and Hour Division determines that there is an apprenticeship program associated with the corresponding journeyman wage rate on the wage determination which provides for less than full fringe benefits for apprentices. Any employee listed on the payroll at a trainee rate who is not registered and participating in a training plan approved by the Employment and Training Administration shall be paid not less than the applicable wage rate on the wage determination for the classification of work actually performed. In addition, any trainee performing work on the job site in excess of the ratio permitted under the registered program shall be paid not less than the applicable wage rate on the wage determination for the work actually performed.

In the event the Employment and Training Administration withdraws approval of a training program, the contractor will no longer be permitted to utilize trainees at less than the applicable predetermined rate for the work performed until an acceptable program is approved.

c. Equal employment opportunity. The utilization of apprentices, trainees and journeymen under this part shall be in conformity with the equal employment opportunity requirements of Executive Order 11246, as amended, and 29 CFR part 30.

d. Apprentices and Trainees (programs of the U.S. DOT).

Apprentices and trainees working under apprenticeship and skill training programs which have been certified by the Secretary of Transportation as promoting EEO in connection with Federal-aid highway construction programs are not subject to the requirements of paragraph 4 of this Section IV. The straight time hourly wage rates for apprentices and trainees under such programs will be established by the particular programs. The ratio of apprentices and trainees to journeymen shall not be greater than permitted by the terms of the particular program.

5. Compliance with Copeland Act requirements. The contractor shall comply with the requirements of 29 CFR part 3, which are incorporated by reference in this contract.

6. Subcontracts. The contractor or subcontractor shall insert Form FHWA-1273 in any subcontracts and also require the subcontractors to include Form FHWA-1273 in any lower tier subcontracts. The prime contractor shall be responsible for the compliance by any subcontractor or lower tier subcontractor with all the contract clauses in 29 CFR 5.5.

7. Contract termination: debarment. A breach of the contract clauses in 29 CFR 5.5 may be grounds for termination of the contract, and for debarment as a contractor and a subcontractor as provided in 29 CFR 5.12.

8. Compliance with Davis-Bacon and Related Act requirements. All rulings and interpretations of the Davis-Bacon and Related Acts contained in 29 CFR parts 1, 3, and 5 are herein incorporated by reference in this contract.

9. Disputes concerning labor standards. Disputes arising out of the labor standards provisions of this contract shall not be subject to the general disputes clause of this contract. Such disputes shall be resolved in accordance with the procedures of the Department of Labor set forth in 29 CFR parts 5, 6, and 7. Disputes within the meaning of this clause include disputes between the contractor (or any of its subcontractors) and the contracting agency, the U.S. Department of Labor, or the employees or their representatives.

10. Certification of eligibility.

a. By entering into this contract, the contractor certifies that neither it (nor he or she) nor any person or firm who has an interest in the contractor's firm is a person or firm ineligible to be awarded Government contracts by virtue of section 3(a) of the Davis-Bacon Act or 29 CFR 5.12(a)(1).

b. No part of this contract shall be subcontracted to any person or firm ineligible for award of a Government contract by virtue of section 3(a) of the Davis-Bacon Act or 29 CFR 5.12(a)(1).

c. The penalty for making false statements is prescribed in the U.S. Criminal Code, 18 U.S.C. 1001.

V. CONTRACT WORK HOURS AND SAFETY STANDARDS ACT

The following clauses apply to any Federal-aid construction contract in an amount in excess of $100,000 and subject to the overtime provisions of the Contract Work Hours and Safety Standards Act. These clauses shall be inserted in addition to the clauses required by 29 CFR 5.5(a) or 29 CFR 4.6. As used in this paragraph, the terms laborers and mechanics include watchmen and guards.

1. Overtime requirements. No contractor or subcontractor contracting for any part of the contract work which may require or involve the employment of laborers or mechanics shall require or permit any such laborer or mechanic in any workweek in which he or she is employed on such work to work in excess of forty hours in such workweek unless such laborer or mechanic receives compensation at a rate not less than one and one-half times the basic rate of pay for all hours worked in excess of forty hours in such workweek.

2. Violation; liability for unpaid wages; liquidated damages. In the event of any violation of the clause set forth in paragraph (1.) of this section, the contractor and any subcontractor responsible therefor shall be liable for the unpaid wages. In addition, such contractor and subcontractor shall be liable to the United States (in the case of work done under contract for the District of Columbia or a territory, to such District or to such territory), for liquidated damages. Such liquidated damages shall be computed with respect to each individual laborer or mechanic, including watchmen and guards, employed in violation of the clause set forth in paragraph (1.) of this section, in the sum of $10 for each calendar day on which such individual was required or permitted to work in excess of the standard workweek of forty hours without payment of the overtime wages required by the clause set forth in paragraph (1.) of this section.

3. Withholding for unpaid wages and liquidated damages. The FHWA or the contacting agency shall upon its own action or upon written request of an authorized representative of the Department of Labor withhold or cause to be withheld, from any moneys payable on account of work performed by the contractor or subcontractor under any such contract or any other Federal contract with the same prime contractor, or any other federally-assisted contract subject to the Contract Work Hours and Safety Standards Act, which is held by the same prime contractor, such sums as may be determined to be necessary to satisfy any liabilities of such contractor or subcontractor for unpaid wages and liquidated damages as provided in the clause set forth in paragraph (2.) of this section.

4. Subcontracts. The contractor or subcontractor shall insert in any subcontracts the clauses set forth in paragraph (1.) through (4.) of this section and also a clause requiring the subcontractors to include these clauses in any lower tier subcontracts. The prime contractor shall be responsible for compliance by any subcontractor or lower tier subcontractor with the clauses set forth in paragraphs (1.) through (4.) of this section.

VI. SUBLETTING OR ASSIGNING THE CONTRACT

This provision is applicable to all Federal-aid construction contracts on the National Highway System.

1. The contractor shall perform with its own organization contract work amounting to not less than 30 percent (or a greater percentage if specified elsewhere in the contract) of the total original contract price, excluding any specialty items designated by the contracting agency. Specialty items may be performed by subcontract and the amount of any such specialty items performed may be deducted from the total original contract price before computing the amount of work required to be performed by the contractor's own organization (23 CFR 635.116).

a. The term “perform work with its own organization” refers to workers employed or leased by the prime contractor, and equipment owned or rented by the prime contractor, with or without operators. Such term does not include employees or equipment of a subcontractor or lower tier subcontractor, agents of the prime contractor, or any other assignees. The term may include payments for the costs of hiring leased employees from an employee leasing firm meeting all relevant Federal and State regulatory requirements. Leased employees may only be included in this term if the prime contractor meets all of the following conditions:

(1) the prime contractor maintains control over the supervision of the day-to-day activities of the leased employees;
(2) the prime contractor remains responsible for the quality of the work of the leased employees;
(3) the prime contractor retains all power to accept or exclude individual employees from work on the project; and
(4) the prime contractor remains ultimately responsible for the payment of predetermined minimum wages, the submission of payrolls, statements of compliance and all other Federal regulatory requirements.

b. "Specialty Items" shall be construed to be limited to work that requires highly specialized knowledge, abilities, or equipment not ordinarily available in the type of contracting organizations qualified and expected to bid or propose on the contract as a whole and in general are to be limited to minor components of the overall contract.

2. The contract amount upon which the requirements set forth in paragraph (1) of Section VI is computed includes the cost of material and manufactured products which are to be purchased or produced by the contractor under the contract provisions.

3. The contractor shall furnish (a) a competent superintendent or supervisor who is employed by the firm, has full authority to direct performance of the work in accordance with the contract requirements, and is in charge of all construction operations (regardless of who performs the work) and (b) such other of its own organizational resources (supervision, management, and engineering services) as the contracting officer determines is necessary to assure the performance of the contract.

4. No portion of the contract shall be sublet, assigned or otherwise disposed of except with the written consent of the contracting officer, or authorized representative, and such consent when given shall not be construed to relieve the contractor of any responsibility for the fulfillment of the contract. Written consent will be given only after the contracting agency has assured that each subcontract is evidenced in writing and that it contains all pertinent provisions and requirements of the prime contract.

5. The 30% self-performance requirement of paragraph (1) is not applicable to design-build contracts; however, contracting agencies may establish their own self-performance requirements.

VII. SAFETY: ACCIDENT PREVENTION

This provision is applicable to all Federal-aid construction contracts and to all related subcontracts.

1. In the performance of this contract the contractor shall comply with all applicable Federal, State, and local laws governing safety, health, and sanitation (23 CFR 635). The contractor shall provide all safeguards, safety devices and protective equipment and take any other needed actions as it determines, or as the contracting officer may determine, to be reasonably necessary to protect the life and health of employees on the job and the safety of the public and to protect property in connection with the performance of the work covered by the contract.

2. It is a condition of this contract, and shall be made a condition of each subcontract, which the contractor enters into pursuant to this contract, that the contractor and any subcontractor shall not permit any employee, in performance of the contract, to work in surroundings or under conditions which are unsanitary, hazardous or dangerous to his/her health or safety, as determined under construction safety and health standards (29 CFR 1926) promulgated by the Secretary of Labor, in accordance with Section 107 of the Contract Work Hours and Safety Standards Act (40 U.S.C. 3704).

3. Pursuant to 29 CFR 1926.3, it is a condition of this contract that the Secretary of Labor or authorized representative thereof, shall have right of entry to any site of contract performance to inspect or investigate the matter of compliance with the construction safety and health standards and to carry out the duties of the Secretary under Section 107 of the Contract Work Hours and Safety Standards Act (40 U.S.C.3704).

VIII. FALSE STATEMENTS CONCERNING HIGHWAY PROJECTS

This provision is applicable to all Federal-aid construction contracts and to all related subcontracts.

In order to assure high quality and durable construction in conformity with approved plans and specifications and a high degree of reliability on statements and representations made by engineers, contractors, suppliers, and workers on Federal-aid highway projects, it is essential that all persons concerned with the project perform their functions as carefully, thoroughly, and honestly as possible. Willful falsification, distortion, or misrepresentation with respect to any facts related to the project is a violation of Federal law. To prevent any misunderstanding regarding the seriousness of these and similar acts, Form FHWA-1022 shall be posted on each Federal-aid highway project (23 CFR 635) in one or more places where it is readily available to all persons concerned with the project:

18 U.S.C. 1020 reads as follows:

"Whoever, being an officer, agent, or employee of the United States, or of any State or Territory, or whoever, whether a person, association, firm, or corporation, knowingly makes any false statement, false representation, or false report as to the character, quality, quantity, or cost of the material used or to be used, or the quantity or quality of the work performed or to be performed, or the cost thereof in connection with the submission of plans, maps, specifications, contracts, or costs of construction on any highway or related project submitted for approval to the Secretary of Transportation; or

Whoever knowingly makes any false statement, false representation, false report or false claim with respect to the character, quality, quantity, or cost of any work performed or to be performed, or materials furnished or to be furnished, in connection with the construction of any highway or related project approved by the Secretary of Transportation; or

Whoever knowingly makes any false statement or false representation as to material fact in any statement, certificate, or report submitted pursuant to provisions of the Federal-aid Roads Act approved July 1, 1916, (39 Stat. 355), as amended and supplemented;

Shall be fined under this title or imprisoned not more than 5 years or both."

IX. IMPLEMENTATION OF CLEAN AIR ACT AND FEDERAL WATER POLLUTION CONTROL ACT

This provision is applicable to all Federal-aid construction contracts and to all related subcontracts.

By submission of this bid/proposal or the execution of this contract, or subcontract, as appropriate, the bidder, proposer, Federal-aid construction contractor, or subcontractor, as appropriate, will be deemed to have stipulated as follows:

1. That any person who is or will be utilized in the performance of this contract is not prohibited from receiving an award due to a violation of Section 508 of the Clean Water Act or Section 306 of the Clean Air Act.
2. That the contractor agrees to include or cause to be included the requirements of paragraph (1) of this Section X in every subcontract, and further agrees to take such action as the contracting agency may direct as a means of enforcing such requirements.

X. CERTIFICATION REGARDING DEBARMENT, SUSPENSION, INELIGIBILITY AND VOLUNTARY EXCLUSION

This provision is applicable to all Federal-aid construction contracts, design-build contracts, subcontracts, lower-tier subcontracts, purchase orders, lease agreements, consultant contracts or any other covered transaction requiring FHWA approval or that is estimated to cost $25,000 or more – as defined in 2 CFR Parts 180 and 1200.

1**. Instructions for Certification – First Tier Participants:**

a. By signing and submitting this proposal, the prospective first tier participant is providing the certification set out below.

b. The inability of a person to provide the certification set out below will not necessarily result in denial of participation in this covered transaction. The prospective first tier participant shall submit an explanation of why it cannot provide the certification set out below. The certification or explanation will be considered in connection with the department or agency's determination whether to enter into this transaction. However, failure of the prospective first tier participant to furnish a certification or an explanation shall disqualify such a person from participation in this transaction.

c. The certification in this clause is a material representation of fact upon which reliance was placed when the contracting agency determined to enter into this transaction. If it is later determined that the prospective participant knowingly rendered an erroneous certification, in addition to other remedies available to the Federal Government, the contracting agency may terminate this transaction for cause of default.

d. The prospective first tier participant shall provide immediate written notice to the contracting agency to whom this proposal is submitted if any time the prospective first tier participant learns that its certification was erroneous when submitted or has become erroneous by reason of changed circumstances.

e. The terms "covered transaction," "debarred," "suspended," "ineligible," "participant," "person," "principal," and "voluntarily excluded," as used in this clause, are defined in 2 CFR Parts 180 and 1200. “First Tier Covered Transactions” refers to any covered transaction between a grantee or subgrantee of Federal funds and a participant (such as the prime or general contract). “Lower Tier Covered Transactions” refers to any covered transaction under a First Tier Covered Transaction (such as subcontracts). “First Tier Participant” refers to the participant who has entered into a covered transaction with a grantee or subgrantee of Federal funds (such as the prime or general contractor). “Lower Tier Participant” refers any participant who has entered into a covered transaction with a First Tier Participant or other Lower Tier Participants (such as subcontractors and suppliers).

f. The prospective first tier participant agrees by submitting this proposal that, should the proposed covered transaction be entered into, it shall not knowingly enter into any lower tier covered transaction with a person who is debarred, suspended, declared ineligible, or voluntarily excluded from participation in this covered transaction, unless authorized by the department or agency entering into this transaction.

g. The prospective first tier participant further agrees by submitting this proposal that it will include the clause titled "Certification Regarding Debarment, Suspension, Ineligibility and Voluntary Exclusion-Lower Tier Covered Transactions," provided by the department or contracting agency, entering into this covered transaction, without modification, in all lower tier covered transactions and in all solicitations for lower tier covered transactions exceeding the $25,000 threshold.

h. A participant in a covered transaction may rely upon a certification of a prospective participant in a lower tier covered transaction that is not debarred, suspended, ineligible, or voluntarily excluded from the covered transaction, unless it knows that the certification is erroneous. A participant is responsible for ensuring that its principals are not suspended, debarred, or otherwise ineligible to participate in covered transactions. To verify the eligibility of its principals, as well as the eligibility of any lower tier prospective participants, each participant may, but is not required to, check the Excluded Parties List System website (https://www.epls.gov/), which is compiled by the General Services Administration.

i. Nothing contained in the foregoing shall be construed to require the establishment of a system of records in order to render in good faith the certification required by this clause. The knowledge and information of the prospective participant is not required to exceed that which is normally possessed by a prudent person in the ordinary course of business dealings.

j. Except for transactions authorized under paragraph (f) of these instructions, if a participant in a covered transaction knowingly enters into a lower tier covered transaction with a person who is suspended, debarred, ineligible, or voluntarily excluded from participation in this transaction, in addition to other remedies available to the Federal Government, the department or agency may terminate this transaction for cause or default.

* * * * *

2. Certification Regarding Debarment, Suspension, Ineligibility and Voluntary Exclusion – First Tier Participants:

a. The prospective first tier participant certifies to the best of its knowledge and belief, that it and its principals:

(1) Are not presently debarred, suspended, proposed for debarment, declared ineligible, or voluntarily excluded from participating in covered transactions by any Federal department or agency;

(2) Have not within a three-year period preceding this proposal been convicted of or had a civil judgment rendered against them for commission of fraud or a criminal offense in connection with obtaining, attempting to obtain, or performing a public (Federal, State or local) transaction or contract under a public transaction; violation of Federal or State antitrust statutes or commission of embezzlement, theft, forgery, bribery, falsification or destruction of records, making false statements, or receiving stolen property;

(3) Are not presently indicted for or otherwise criminally or civilly charged by a governmental entity (Federal, State or local) with commission of any of the offenses enumerated in paragraph (a)(2) of this certification; and

(4) Have not within a three-year period preceding this application/proposal had one or more public transactions (Federal, State or local) terminated for cause or default.

b. Where the prospective participant is unable to certify to any of the statements in this certification, such prospective participant shall attach an explanation to this proposal.

2. **Instructions for Certification - Lower Tier Participants:**

(Applicable to all subcontracts, purchase orders and other lower tier transactions requiring prior FHWA approval or estimated to cost $25,000 or more - 2 CFR Parts 180 and 1200)

a. By signing and submitting this proposal, the prospective lower tier is providing the certification set out below.

b. The certification in this clause is a material representation of fact upon which reliance was placed when this transaction was entered into. If it is later determined that the prospective lower tier participant knowingly rendered an erroneous certification, in addition to other remedies available to the Federal Government, the department, or agency with which this transaction originated may pursue available remedies, including suspension and/or debarment.

c. The prospective lower tier participant shall provide immediate written notice to the person to which this proposal is submitted if at any time the prospective lower tier participant learns that its certification was erroneous by reason of changed circumstances.

d. The terms "covered transaction," "debarred," "suspended," "ineligible," "participant," "person," "principal," and "voluntarily excluded," as used in this clause, are defined in 2 CFR Parts 180 and 1200. You may contact the person to which this proposal is submitted for assistance in obtaining a copy of those regulations. “First Tier Covered Transactions” refers to any covered transaction between a grantee or subgrantee of Federal funds and a participant (such as the prime or general contract). “Lower Tier Covered Transactions” refers to any covered transaction under a First Tier Covered Transaction (such as subcontracts). “First Tier Participant” refers to the participant who has entered into a covered transaction with a grantee or subgrantee of Federal funds (such as the prime or general contractor). “Lower Tier Participant” refers any participant who has entered into a covered transaction with a First Tier Participant or other Lower Tier Participants (such as subcontractors and suppliers).

e. The prospective lower tier participant agrees by submitting this proposal that, should the proposed covered transaction be entered into, it shall not knowingly enter into any lower tier covered transaction with a person who is debarred, suspended, declared ineligible, or voluntarily excluded from participation in this covered transaction, unless authorized by the department or agency with which this transaction originated.

f. The prospective lower tier participant further agrees by submitting this proposal that it will include this clause titled "Certification Regarding Debarment, Suspension, Ineligibility and Voluntary Exclusion-Lower Tier Covered Transaction," without modification, in all lower tier covered transactions and in all solicitations for lower tier covered transactions exceeding the $25,000 threshold.

g. A participant in a covered transaction may rely upon a certification of a prospective participant in a lower tier covered transaction that is not debarred, suspended, ineligible, or voluntarily excluded from the covered transaction, unless it knows that the certification is erroneous. A participant is responsible for ensuring that its principals are not suspended, debarred, or otherwise ineligible to participate in covered transactions. To verify the eligibility of its principals, as well as the eligibility of any lower tier prospective participants, each participant may, but is not required to, check the Excluded Parties List System website (https://www.epls.gov/), which is compiled by the General Services Administration.

h. Nothing contained in the foregoing shall be construed to require establishment of a system of records in order to render in good faith the certification required by this clause. The knowledge and information of participant is not required to exceed that which is normally possessed by a prudent person in the ordinary course of business dealings.

i. Except for transactions authorized under paragraph e of these instructions, if a participant in a covered transaction knowingly enters into a lower tier covered transaction with a person who is suspended, debarred, ineligible, or voluntarily excluded from participation in this transaction, in addition to other remedies available to the Federal Government, the

department or agency with which this transaction originated may pursue available remedies, including suspension and/or debarment.

* * * * *

Certification Regarding Debarment, Suspension, Ineligibility and Voluntary Exclusion--Lower Tier Participants:

1. The prospective lower tier participant certifies, by submission of this proposal, that neither it nor its principals is presently debarred, suspended, proposed for debarment, declared ineligible, or voluntarily excluded from participating in covered transactions by any Federal department or agency.

2. Where the prospective lower tier participant is unable to certify to any of the statements in this certification, such prospective participant shall attach an explanation to this proposal.

* * * * *

XI. CERTIFICATION REGARDING USE OF CONTRACT FUNDS FOR LOBBYING

This provision is applicable to all Federal-aid construction contracts and to all related subcontracts which exceed $100,000 (49 CFR 20).

1. The prospective participant certifies, by signing and submitting this bid or proposal, to the best of his or her knowledge and belief, that:

a. No Federal appropriated funds have been paid or will be paid, by or on behalf of the undersigned, to any person for influencing or attempting to influence an officer or employee of any Federal agency, a Member of Congress, an officer or employee of Congress, or an employee of a Member of Congress in connection with the awarding of any Federal contract, the making of any Federal grant, the making of any Federal loan, the entering into of any cooperative agreement, and the extension, continuation, renewal, amendment, or modification of any Federal contract, grant, loan, or cooperative agreement.

b. If any funds other than Federal appropriated funds have been paid or will be paid to any person for influencing or attempting to influence an officer or employee of any Federal agency, a Member of Congress, an officer or employee of Congress, or an employee of a Member of Congress in connection with this Federal contract, grant, loan, or cooperative agreement, the undersigned shall complete and submit Standard Form-LLL, "Disclosure Form to Report Lobbying," in accordance with its instructions.

2. This certification is a material representation of fact upon which reliance was placed when this transaction was made or entered into. Submission of this certification is a prerequisite for making or entering into this transaction imposed by 31 U.S.C. 1352. Any person who fails to file the required certification shall be subject to a civil penalty of not less than $10,000 and not more than $100,000 for each such failure.

3. The prospective participant also agrees by submitting its bid or proposal that the participant shall require that the language of this certification be included in all lower tier subcontracts, which exceed $100,000 and that all such recipients shall certify and disclose accordingly.

ATTACHMENT A - EMPLOYMENT AND MATERIALS PREFERENCE FOR APPALACHIAN DEVELOPMENT HIGHWAY SYSTEM OR APPALACHIAN LOCAL ACCESS ROAD CONTRACTS

This provision is applicable to all Federal-aid projects funded under the Appalachian Regional Development Act of 1965.

1. During the performance of this contract, the contractor undertaking to do work which is, or reasonably may be, done as on-site work, shall give preference to qualified persons who regularly reside in the labor area as designated by the DOL wherein the contract work is situated, or the subregion, or the Appalachian counties of the State wherein the contract work is situated, except:

a. To the extent that qualified persons regularly residing in the area are not available.

b. For the reasonable needs of the contractor to employ supervisory or specially experienced personnel necessary to assure an efficient execution of the contract work.

c. For the obligation of the contractor to offer employment to present or former employees as the result of a lawful collective bargaining contract, provided that the number of nonresident persons employed under this subparagraph (1c) shall not exceed 20 percent of the total number of employees employed by the contractor on the contract work, except as provided in subparagraph (4) below.

2. The contractor shall place a job order with the State Employment Service indicating (a) the classifications of the laborers, mechanics and other employees required to perform the contract work, (b) the number of employees required in each classification, (c) the date on which the participant estimates such employees will be required, and (d) any other pertinent information required by the State Employment Service to complete the job order form. The job order may be placed with the State Employment Service in writing or by telephone. If during the course of the contract work, the information submitted by the contractor in the original job order is substantially modified, the participant shall promptly notify the State Employment Service.

3. The contractor shall give full consideration to all qualified job applicants referred to him by the State Employment Service. The contractor is not required to grant employment to any job applicants who, in his opinion, are not qualified to perform the classification of work required.

4. If, within one week following the placing of a job order by the contractor with the State Employment Service, the State Employment Service is unable to refer any qualified job applicants to the contractor, or less than the number requested, the State Employment Service will forward a certificate to the contractor indicating the unavailability of applicants. Such certificate shall be made a part of the contractor's permanent project records. Upon receipt of this certificate, the contractor may employ persons who do not normally reside in the labor area to fill positions covered by the certificate, notwithstanding the provisions of subparagraph (1c) above.

5. The provisions of 23 CFR 633.207(e) allow the contracting agency to provide a contractual preference for the use of mineral resource materials native to the Appalachian region.

6. The contractor shall include the provisions of Sections 1 through 4 of this Attachment A in every subcontract for work which is, or reasonably may be, done as on-site work.

KENTUCKY TRANSPORTATION CABINET
DEPARTMENT OF HIGHWAYS

EMPLOYMENT REQUIREMENTS
RELATING TO
NONDISCRIMINATION OF EMPLOYEES
(APPLICABLE TO FEDERAL-AID SYSTEM CONTRACTS)

AN ACT OF THE KENTUCKY GENERAL ASSEMBLY TO PREVENT DISCRIMINATION IN EMPLOYMENT

KRS CHAPTER 344
EFFECTIVE JUNE 16, 1972

The contract on this project, in accordance with KRS Chapter 344, provides that during the performance of this contract, the contractor agrees as follows:

1. The contractor shall not fail or refuse to hire, or shall not discharge any individual, or otherwise discriminate against an individual with respect to his compensation, terms, conditions, or privileges of employment, because of such individual's race, color, religion, national origin, sex, disability or age (between forty and seventy); or limit, segregate, or classify his employees in any way which would deprive or tend to deprive an individual of employment opportunities or otherwise adversely affect his status as an employee, because of such individual's race, color, religion, national origin, sex, disability or age (between forty and seventy). The contractor agrees to post in conspicuous places, available to employees and applicants for employment, notices to be provided setting forth the provisions of this nondiscrimination clause.

2. The contractor shall not print or publish or cause to be printed or published a notice or advertisement relating to employment by such an employer or membership in or any classification or referral for employment by the employment agency, indicating any preference, limitation, specification, or discrimination, based on race, color, religion, national origin, sex, disability or age (between forty and seventy), except that such notice or advertisement may indicate a preference, limitation, or specification based on religion, or national origin when religion, or national origin is a bona fide occupational qualification for employment.

3. If the contractor is in control of apprenticeship or other training or retraining, including on-the-job training programs, he shall not discriminate against an individual because of his race, color, religion, national origin, sex, disability or age (between forty and seventy), in admission to, or employment in any program established to provide apprenticeship or other training.

4. The contractor will send to each labor union or representative of workers with which he has a collective bargaining agreement or other contract or understanding, a notice to be provided advising the said labor union or workers' representative of the contractor's commitments under this section, and shall post copies of the notice in conspicuous places available to employees and applicants for employment. The contractor will take such action with respect to any subcontract or purchase order as the administrating agency may direct as a means of enforcing such provisions, including sanctions for non-compliance.

REVISED: 12-3-92

Standard Title VI/Non-Discrimination Assurances

During the performance of this contract, the contractor, for itself, its assignees, and successors in interest (hereinafter referred to as the "contractor") agrees as follows:

1. **Compliance with Regulations:** The contractor (hereinafter includes consultants) will comply with the Acts and the Regulations relative to Non-discrimination in Federally-assisted programs of the U.S. Department of Transportation, **Federal Highway Administration**, as they may be amended from time to time, which are herein incorporated by reference and made a part of this contract.

2. **Non-discrimination:** The contractor, with regard to the work performed by it during the contract, will not discriminate on the grounds of race, color, or national origin in the selection and retention of subcontractors, including procurements of materials and leases of equipment. The contractor will not participate directly or indirectly in the discrimination prohibited by the Acts and the Regulations, including employment practices when the contract covers any activity, project, or program set forth in Appendix B of 49 CFR Part 21.

3. **Solicitations for Subcontracts, Including Procurements of Materials and Equipment:** In all solicitations, either by competitive bidding, or negotiation made by the contractor for work to be performed under a subcontract, including procurements of materials, or leases of equipment, each potential subcontractor or supplier will be notified by the contractor of the contractor's obligations under this contract and the Acts and the Regulations relative to Non-discrimination on the grounds of race, color, or national origin.

4. **Information and Reports:** The contractor will provide all information and reports required by the Acts, the Regulations, and directives issued pursuant thereto and will permit access to its books, records, accounts, other sources of information, and its facilities as may be determined by the Recipient or the **Federal Highway Administration** to be pertinent to ascertain compliance with such Acts, Regulations, and instructions. Where any information required of a contractor is in the exclusive possession of another who fails or refuses to furnish the information, the contractor will so certify to the Recipient or the **Federal Highway Administration**, as appropriate, and will set forth what efforts it has made to obtain the information.

5. **Sanctions for Noncompliance:** In the event of a contractor's noncompliance with the Non-discrimination provisions of this contract, the Recipient will impose such contract sanctions as it or the **Federal Highway Administration** may determine to be appropriate, including, but not limited to:

    a. withholding payments to the contractor under the contract until the contractor complies; and/or
    b. cancelling, terminating, or suspending a contract, in whole or in part.

6. **Incorporation of Provisions:** The contractor will include the provisions of paragraphs one through six in every subcontract, including procurements of materials and leases of equipment, unless exempt by the Acts, the Regulations and directives issued pursuant thereto. The contractor will take action with respect to any subcontract or procurement as the Recipient or the **Federal Highway Administration** may direct as a means of enforcing such provisions including sanctions for noncompliance. Provided, that if the contractor becomes involved in, or is threatened with litigation by a subcontractor, or supplier because of such direction, the contractor may request the Recipient to enter into any litigation to protect the interests of the Recipient. In addition, the contractor may request the United States to enter into the litigation to protect the interests of the United States.

Standard Title VI/Non-Discrimination Statutes and Authorities

During the performance of this contract, the contractor, for itself, its assignees, and successors in interest (hereinafter referred to as the "contractor") agrees to comply with the following non-discrimination statutes and authorities; including but not limited to:

- Title VI of the Civil Rights Act of 1964 (42 U.S.C. § 2000d *et seq*., 78 stat. 252), (prohibits discrimination on the basis of race, color, national origin); and 49 CFR Part 21;
- The Uniform Relocation Assistance and Real Property Acquisition Policies Act of 1970, (42 U.S.C. § 4601), (prohibits unfair treatment of persons displaced or whose property has been acquired because of Federal or Federal-aid programs and projects);
- Federal-Aid Highway Act of 1973, (23 U.S.C. § 324 *et seq*.), (prohibits discrimination on the basis of sex);
- Section 504 of the Rehabilitation Act of 1973, (29 U.S.C. § 794 *et seq*.), as amended, (prohibits discrimination on the basis of disability); and 49 CFR Part 27;
- The Age Discrimination Act of 1975, as amended, (42 U.S.C. § 6101 *et seq*.), (prohibits discrimination on the basis of age);
- Airport and Airway Improvement Act of 1982, (49 USC § 471, Section 47123), as amended, (prohibits discrimination based on race, creed, color, national origin, or sex);
- The Civil Rights Restoration Act of 1987, (PL 100-209), (Broadened the scope, coverage and applicability of Title VI of the Civil Rights Act of 1964, The Age Discrimination Act of 1975 and Section 504 of the Rehabilitation Act of 1973, by expanding the definition of the terms "programs or activities" to include all of the programs or activities of the Federal-aid recipients, sub-recipients and contractors, whether such programs or activities are Federally funded or not);
- Titles II and III of the Americans with Disabilities Act, which prohibit discrimination on the basis of disability in the operation of public entities, public and private transportation systems, places of public accommodation, and certain testing entities (42 U.S.C. §§ 12131 -- 12189) as implemented by Department of Transportation regulations at 49 C.F.R. parts 37 and 38;
- The Federal Aviation Administration's Non-discrimination statute (49 U.S.C. § 47123) (prohibits discrimination on the basis of race, color, national origin, and sex);
- Executive Order 12898, Federal Actions to Address Environmental Justice in Minority Populations and Low-Income Populations, which ensures non-discrimination against minority populations by discouraging programs, policies, and activities with disproportionately high and adverse human health or environmental effects on minority and low-income populations;
- Executive Order 13166, Improving Access to Services for Persons with Limited English Proficiency, and resulting agency guidance, national origin discrimination includes discrimination because of limited English proficiency (LEP). To ensure compliance with Title VI, you must take reasonable steps to ensure that LEP persons have meaningful access to your programs (70 Fed. Reg. at 74087 to 74100);
- Title IX of the Education Amendments of 1972, as amended, which prohibits you from discriminating because of sex in education programs or activities (20 U.S.C. 1681 et seq).

EXECUTIVE BRANCH CODE OF ETHICS

In the 1992 regular legislative session, the General Assembly passed and Governor Brereton Jones signed Senate Bill 63 (codified as KRS 11A), the Executive Branch Code of Ethics, which states, in part:

KRS 11A.040 (6) provides:

No present or former public servant shall, within six (6) months of following termination of his office or employment, accept employment, compensation or other economic benefit from any person or business that contracts or does business with the state in matters in which he was directly involved during his tenure. This provision shall not prohibit an individual from returning to the same business, firm, occupation, or profession in which he was involved prior to taking office or beginning his term of employment, provided that, for a period of six (6) months, he personally refrains from working on any matter in which he was directly involved in state government. This subsection shall not prohibit the performance of ministerial functions, including, but not limited to, filing tax returns, filing applications for permits or licenses, or filing incorporation papers.

KRS 11A.040 (8) states:

A former public servant shall not represent a person in a matter before a state agency in which the former public servant was directly involved, for a period of one (1) year after the latter of:

a) The date of leaving office or termination of employment; or
b) The date the term of office expires to which the public servant was elected.

This law is intended to promote public confidence in the integrity of state government and to declare as public policy the idea that state employees should view their work as a public trust and not as a way to obtain private benefits.

If you have worked for the executive branch of state government within the past six months, you may be subject to the law's prohibitions. The law's applicability may be different if you hold elected office or are contemplating representation of another before a state agency.

Also, if you are affiliated with a firm which does business with the state and which employs former state executive-branch employees, you should be aware that the law may apply to them.

In case of doubt, the law permits you to request an advisory opinion from the Executive Branch Ethics Commission, Room 136, Capitol Building, 700 Capitol Avenue, Frankfort, Kentucky 40601; telephone (502) 564-7954.

General Decision Number: KY150123 01/02/2015 KY123

Superseded General Decision Number: KY20140123

State: Kentucky

Construction Type: Highway

Counties: Adair, Barren, Bell, Breathitt, Casey, Clay, Clinton, Cumberland, Estill, Floyd, Garrard, Green, Harlan, Hart, Jackson, Johnson, Knott, Knox, Laurel, Lawrence, Lee, Leslie, Letcher, Lincoln, Magoffin, Martin, McCreary, Menifee, Metcalfe, Monroe, Morgan, Owsley, Perry, Pike, Powell, Pulaski, Rockcastle, Russell, Taylor, Wayne, Whitley and Wolfe Counties in Kentucky.

HIGHWAY CONSTRUCTION PROJECTS

Note: Executive Order (EO) 13658 establishes an hourly minimum wage of $10.10 for 2015 that applies to all contracts subject to the Davis-Bacon Act for which the solicitation is issued on or after January 1, 2015. If this contract is covered by the EO, the contractor must pay all workers in any classification listed on this wage determination at least $10.10 (or the applicable wage rate listed on this wage determination, if it is higher) for all hours spent performing on the contract. The EO minimum wage rate will be adjusted annually. Additional information on contractor requirements and worker protections under the EO is available at www.dol.gov/whd/govcontracts.

Modification Number	Publication Date
0	01/02/2015

SUKY2013-001 12/06/2013

	Rates	Fringes
BOILERMAKER	$ 24.65	12.94
BRICKLAYER		
Bricklayer	$ 22.90	8.50
Stone Mason	$ 21.50	8.50
CARPENTER		
Carpenter	$ 24.15	13.50
Piledriver	$ 23.80	13.50
ELECTRICIAN		
Equipment Operator	$ 26.90	10.31
Groundsman	$ 17.79	8.51
Lineman	$ 30.09	10.94

When workmen are required to work from bosum chairs, trusses, stacks, tanks, scaffolds, catwalks, radio and T.V. towers, structural steel (open, unprotected, unfloored raw steel), and bridges or similar hazardous locations where workmen are subject to fall, except where using JLG's and bucket trucks up to 75 feet: Add 25% to workman's base rate for 50 to 75 feet,

and add 50% to workman's base rate for over 75 feet.

IRONWORKER.....$ 26.34 18.84

LABORER
Group 1.....$ 21.15 11.41
Group 2.....$ 21.40 11.41
Group 3.....$ 21.45 11.41
Group 4.....$ 22.05 11.41

GROUP 1: Aging and Curing of Concrete (Any Mode or Method), Asbestos Abatement Worker, Asphalt Plant Laborers, Asphalt Laborers, Batch Truck Dumpers, Carpenter Tenders, Cement Mason Tenders, Cleaning of Machines, Concrete Laborers, Demolition Laborers, Dredging Laborers, Drill Tender, Environmental Laborer - Nuclear, Radiation, Toxic and Hazardous Waste - Level D, Flagmen, Grade Checkers, All Hand Digging and Hand Back Filling, Highway Marker Placers, Landscaping Laborers, Mesh Handlers and Placers, Puddler, Railroad Laborers, Rip-rap and Grouters, Right of Way Laborers, Sign, Guard Rail and Fence Installers (All Types), Signalmen, Sound Barrier Installer, Storm and Sanitary Sewer Laborers, Swampers, Truck Spotters and Dumpers, Wrecking of Concrete Forms, General Cleanup

GROUP 2: Batter Board Men (Sanitary and Storm Sewer), Brickmason Tenders, Mortar Mixer Operator, Scaffold Builders, Burner and Welder, Bushammers, Chain Saw Operator, Concrete Saw Operators, Deckhand Scow Man, Dry Cement Handlers, Environmental Laborers - Nuclear, Radiation, Toxic and Hazardous Waste - Level C, Forklift Operators for Masonry, Form Setters, Green Concrete Cutting, Hand Operated Grouter and Grinder Machine Operator, Jack Hammers, Lead Paint Abatement, Pavement Breakers, Paving Joint Machine, Pipe Layers - Laser Operators (Non-metallic), Plastic Pipe Fusion, Power Driven Georgia Buggy and Wheel Barrow, Power Post Hole Diggers, Precast Manhole Setters, Walk-behind Tampers, Walk-behind Trenchers, Sand Blasters, Concrete Chippers, Surface Grinders, Vibrator Operators, Wagon Drillers

GROUP 3: Air Track Driller (All Types), Asphalt Luteman and Rakers, Gunnite Nozzleman, Gunnite Operators and Mixers, Grout Pump Operator, Powderman and Blaster, Side Rail Setters, Rail Paved Ditches, Screw Operators, Tunnel Laborers (Free Air), Water Blasters

GROUP 4: Caisson Workers (Free Air), Cement Finishers, Environmental Laborer - Nuclear, Radiation, Toxic and Hazardous Waste - Level A and B, miners and Drillers (Free Air), Tunnel Blasters, and Tunnel Mockers (Free Air), Directional and Horizontal Boring, Air Track Drillers (All Types), Powder Man and Blasters, Troxler and Concrete Tester if Llaborer is Utilized

PAINTER
All Excluding Bridges.....$ 19.92 9.57
Bridges.....$ 23.92 10.07

PLUMBER.....$ 22.52 7.80

POWER EQUIPMENT OPERATOR:

Group 1.....$ 27.35 13.40
Group 2.....$ 24.87 13.40
Group 3.....$ 25.26 13.40
Group 4.....$ 24.60 13.40

GROUP 1: Auto Patrol, Batcher Plant, Bituminous Paver, Cable-Way, Clamshell, Concrete Mixer (21 cu ft or over), Concrete Pump, Crane, Crusher Plant, Derrick, Derrick Boat, Ditching and Trenching Machine, Dragline, Dredge Engineer, Elevating Grader and all types of Loaders, Hoe-type Machine, Hoisting Engine, Locomotive, LeTourneau or Carry-all Scoop, Bulldozer, Mechanic, Orangepeel Bucket, Piledriver, Power Blade, Roller (Bituminous), Roller (Earth), Roller (Rock), Scarifier, Shovel, Tractor Shovel, Truck Crane, Well Point, Winch Truck, Push Dozer, Grout Pump, High Lift, Fork Lift (regardless of lift height), all types of Boom Cats, Multiple Operator, Core Drill, Tow or Push Boat, A-Frame Winch Truck, Concrete Paver, Grade-All, Hoist, Hyster, Material Pump, Pumpcrete, Ross Carrier, Sheepfoot, Sideboom, Throttle-Valve Man, Rotary Drill, Power Generator, Mucking Machine, Rock Spreader attached to Equipment, Scoopmobile, KeCal Loader, Tower Cranes, Hydrocrane, Tugger, Backfiller Gurries, Self-propelled Compactor, Self-Contained Hydraulic Percussion Drill

GROUP 2: All Air Compressors (200 cu ft/min or greater), Bituminous Mixer, Concrete Mixer (under 212 cu ft), Welding Machine, Form Grader, Tractor (50 hp and over), Bull Float, Finish Machine, Outboard Motor Boat, Brakeman, Mechanic Tender, Whirly Oiler, Tract-air, Road Widening Trencher, Articulating Trucks

GROUP 3: Greaser on Grease Facilities servicing Heavy Equipment

GROUP 4: Bituminous Distributor, Cement Gun, Conveyor, Mud Jack, Paving Joint Machine, Pump, Tamping Machine, Tractor (under 50 hp), Vibrator, Oiler, Air Compressor (under 200 cu ft per minute), Concrete Saw, Burlap and Curing Machine, Hydro Seeder, Power Form Handling Equipment, Deckhand Oiler, Hydraulic Post Driver

SHEET METAL WORKER.....$ 20.40 7.80

TRUCK DRIVER
Driver (3 Tons and Over),
Driver (Truck Mounted
Rotary Drill).....$ 22.99 13.50
Driver (3 Tons and Under),
Tire Changer and Truck
Mechanic Tender.....$ 22.78 13.50
Driver (Semi-Trailer or
Pole Trailer), Driver
(Dump Truck, Tandem Axle),
Driver of Distributor.....$ 22.65 13.50
Driver on Mixer Trucks
(All Types).....$ 22.70 13.50
Driver on Pavement Breakers.$ 22.80 13.50
Driver, Euclid and Other
Heavy Earth Moving
Equipment and Low Boy.....$ 23.56 13.50
Driver, Winch Truck and A-

Frame when used in Transporting Materials	$ 22.55	13.50
Greaser on Greasing Facilities	$ 23.65	13.50
Truck Mechanic	$ 22.75	13.50
Truck Tender and Warehouseman	$ 22.45	13.50

WELDERS - Receive rate prescribed for craft performing operation to which welding is incidental.

==========

Unlisted classifications needed for work not included within the scope of the classifications listed may be added after award only as provided in the labor standards contract clauses (29CFR 5.5 (a) (1) (ii)).

The body of each wage determination lists the classification and wage rates that have been found to be prevailing for the cited type(s) of construction in the area covered by the wage determination. The classifications are listed in alphabetical order of "identifiers" that indicate whether the particular rate is a union rate (current union negotiated rate for local), a survey rate (weighted average rate) or a union average rate (weighted union average rate).

Union Rate Identifiers

A four letter classification abbreviation identifier enclosed in dotted lines beginning with characters other than "SU" or "UAVG" denotes that the union classification and rate were prevailing for that classification in the survey. Example: PLUM0198-005 07/01/2014. PLUM is an abbreviation identifier of the union which prevailed in the survey for this classification, which in this example would be Plumbers. 0198 indicates the local union number or district council number where applicable, i.e., Plumbers Local 0198. The next number, 005 in the example, is an internal number used in processing the wage determination. 07/01/2014 is the effective date of the most current negotiated rate, which in this example is July 1, 2014.

Union prevailing wage rates are updated to reflect all rate changes in the collective bargaining agreement (CBA) governing this classification and rate.

Survey Rate Identifiers

Classifications listed under the "SU" identifier indicate that no one rate prevailed for this classification in the survey and the published rate is derived by computing a weighted average rate based on all the rates reported in the survey for that classification. As this weighted average rate includes all

rates reported in the survey, it may include both union and non-union rates. Example: SULA2012-007 5/13/2014. SU indicates the rates are survey rates based on a weighted average calculation of rates and are not majority rates. LA indicates the State of Louisiana. 2012 is the year of survey on which these classifications and rates are based. The next number, 007 in the example, is an internal number used in producing the wage determination. 5/13/2014 indicates the survey completion date for the classifications and rates under that identifier.

Survey wage rates are not updated and remain in effect until a new survey is conducted.

Union Average Rate Identifiers

Classification(s) listed under the UAVG identifier indicate that no single majority rate prevailed for those classifications; however, 100% of the data reported for the classifications was union data. EXAMPLE: UAVG-OH-0010 08/29/2014. UAVG indicates that the rate is a weighted union average rate. OH indicates the state. The next number, 0010 in the example, is an internal number used in producing the wage determination. 08/29/2014 indicates the survey completion date for the classifications and rates under that identifier.

A UAVG rate will be updated once a year, usually in January of each year, to reflect a weighted average of the current negotiated/CBA rate of the union locals from which the rate is based.

WAGE DETERMINATION APPEALS PROCESS

1.) Has there been an initial decision in the matter? This can be:

* an existing published wage determination
* a survey underlying a wage determination
* a Wage and Hour Division letter setting forth a position on a wage determination matter
* a conformance (additional classification and rate) ruling

On survey related matters, initial contact, including requests for summaries of surveys, should be with the Wage and Hour Regional Office for the area in which the survey was conducted because those Regional Offices have responsibility for the Davis-Bacon survey program. If the response from this initial contact is not satisfactory, then the process described in 2.) and 3.) should be followed.

With regard to any other matter not yet ripe for the formal process described here, initial contact should be with the Branch of Construction Wage Determinations. Write to:

Branch of Construction Wage Determinations
Wage and Hour Division
U.S. Department of Labor

200 Constitution Avenue, N.W.
Washington, DC 20210

2.) If the answer to the question in 1.) is yes, then an interested party (those affected by the action) can request review and reconsideration from the Wage and Hour Administrator (See 29 CFR Part 1.8 and 29 CFR Part 7). Write to:

Wage and Hour Administrator
U.S. Department of Labor
200 Constitution Avenue, N.W.
Washington, DC 20210

The request should be accompanied by a full statement of the interested party's position and by any information (wage payment data, project description, area practice material, etc.) that the requestor considers relevant to the issue.

3.) If the decision of the Administrator is not favorable, an interested party may appeal directly to the Administrative Review Board (formerly the Wage Appeals Board). Write to:

Administrative Review Board
U.S. Department of Labor
200 Constitution Avenue, N.W.
Washington, DC 20210

4.) All decisions by the Administrative Review Board are final.

==========

END OF GENERAL DECISION

Fringe benefit amounts are applicable for all hours worked except when otherwise noted.

These rates are listed pursuant to the Kentucky Determination No. CR-14-II- HWY dated July 14, 2014.

NOTE: Both Kentucky Determination No. CR-14-II-HWY and Federal Decision No. KY140123 apply to this project. Both sets of wage rates are included. If there is a difference in the two wages for the same classification, the Contractor is required to pay the higher of the two listed wages.

No laborer, workman or mechanic shall be paid at a rate less than that of a Journeyman except those classified as bona fide apprentices.

Apprentices or trainees shall be permitted to work as such subject to Administrative Regulations adopted by the Commissioner of Workplace Standards. Copies of these regulations will be furnished upon request from any interested person.

Before using apprentices on the job the contractor shall present to the Contracting Officer written evidence of registration of such employees in a program of a State apprenticeship and training agency approved and recognized by the U. S. Bureau of Apprenticeship and Training. In the absence of such a State agency, the contractor shall submit evidence of approval and registration by the U. S. Bureau of Apprenticeship and Training.

The contractor shall submit to the Contracting Officer, written evidence of the established apprenticeship-journeyman ratios and wage rates in the project area, which will be the basis for establishing such ratios and rates for the project under the applicable contract provisions.

TO: EMPLOYERS/EMPLOYEES

PREVAILING WAGE SCHEDULE:
The wages indicated on this wage schedule are the least permitted to be paid for the occupations indicated. When an employee works in more than one classification, the employer must record the number of hours worked in each classification at the prescribed hourly base rate.
OVERTIME:
Overtime is to be paid after an employee works eight (8) hours a day or forty (40) hours a week, whichever gives the employee the greater wages. At least time and one-half the base rate is required for all overtime. A laborer, workman or mechanic and an employer may enter into a written agreement or a collective bargaining agreement to work more than eight (8) hours a calendar day but not more than ten (10) hours a calendar day for the straight time hourly rate. Wage violations or questions should be directed to the designated Engineer or the undersigned.

Diana Castle Radcliffe, P.E.
Director, Division of Construction Procurement
Frankfort, Kentucky 40622

KENTUCKY LABOR CABINET
PREVAILING WAGE DETERMINATION
CURRENT REVISION
HIGHWAY CONSTRUCTION LOCALITY NO. II

Determination No. CR-14-II-HWY

Project No.
Highway

Date of Determination: July 14, 2014

This schedule of the prevailing rate of wages for Locality No. II including the counties of ADAIR, BARREN, BELL, BREATHITT, CASEY, CLAY, CLINTON, CUMBERLAND, ESTILL, FLOYD, GARRARD, GREEN, HARLAN, HART, JACKSON, JOHNSON, KNOTT, KNOX, LAUREL, LAWRENCE, LEE, LESLIE, LETCHER, LINCOLN, MCCREARY, MAGOFFIN, MARTIN, MENIFEE, METCALFE, MONROE, MORGAN, OWSLEY, PERRY, PIKE, POWELL, PULASKI, ROCKCASTLE, RUSSELL, TAYLOR, WAYNE, WHITLEY, and WOLFE has been determined in accordance with the provisions of KRS 337.505 to 337.550. This determination shall be referred to as Prevailing Wage Determination No. CR-14-II-HWY.

The following schedule of rates is to be used for highway construction projects advertised or awarded by the Kentucky Transportation Cabinet. This includes any contracts for the relocation of any utilities or other incidental construction projects advertised or awarded by public authorities as a result of the highway construction project.

Apprentices or trainees shall be permitted to work in accordance with Administrative Regulations. Copies of these regulations will be furnished upon request to any interested person.

Overtime is to be computed at not less than one and one-half (1 1/2) times the indicated BASE RATE for all hours worked in excess of eight (8) hours per day, or in excess of forty (40) hours per week. However, KRS 337.540 permits an employee and employer to agree, in writing, that the employee will be compensated at a straight time base rate for hours worked in excess of eight (8) hours in any one calendar day, but not more than ten (10) hours worked in any one calendar day, if such written agreement is prior to the over eight (8) hours in a calendar day actually being worked, or where provided for in a collective bargaining agreement. The fringe benefit rate is to be paid for each hour worked at a straight time rate for all hours worked. Fringe benefit amounts are applicable for all hours worked except when otherwise noted. Welders will receive rate for craft in which welding is incidental.

No laborer, workman or mechanic shall be paid at a rate less than that of the General Laborer except those classified as bona fide apprentices registered with the Kentucky State Apprenticeship Supervisor unless otherwise specified in this schedule of wage rates.

Anthony Russell, Commissioner
Department of Workplace Standards

CLASSIFICATIONS	RATE AND FRINGE BENEFITS	
BOILERMAKERS:	BASE RATE	$24.65
	FRINGE BENEFIT	12.94
BRICKLAYERS:		
Bricklayers:	BASE RATE	$22.90
	FRINGE BENEFITS	8.50
Stone Mason:	BASE RATE	$21.50
	FRINGE BENEFITS	8.50
CARPENTERS:		
Carpenters:	BASE RATE	$24.90
	FRINGE BENEFITS	14.50
Piledrivers:	BASE RATE	$24.55
	FRINGE BENEFITS	14.50
CEMENT MASONS:	BASE RATE	$21.25
	FRINGE BENEFITS	8.50
ELECTRICIANS:	*BASE RATE	$29.36
	FRINGE BENEFITS	10.55

*When workmen are required to work from bosum chairs, trusses, stacks, tanks, scaffolds, catwalks, radio and T.V. towers, structural steel (open, unprotected, unfloored raw steel), and bridges or similar hazardous locations where workmen are subject to a direct fall, except where using JLG's and bucket trucks up to 75 feet: Add 25% to workman's base rate for 50 to 75 feet, and add 50% to workman's base rate for over 75 feet.

LINEMAN:	*BASE RATE	$30.09
	FRINGE BENEFITS	10.94
EQUIPMENT OPERATOR:	*BASE RATE	$26.90
	FRINGE BENEFITS	10.31
GROUNDSMAN:	*BASE RATE	$17.79
	FRINGE BENEFITS	8.51
IRONWORKERS:	BASE RATE	$ 26.97
	FRINGE BENEFITS	20.01

CLASSIFICATIONS RATE AND FRINGE BENEFITS

LABORERS:

GROUP 1: Aging and curing of concrete (any mode or method), asbestos abatement worker, asphalt plant laborers, asphalt laborers; batch truck dumpers; carpenter tenders, cement mason tenders, cleaning of machines, concrete laborers, demolition laborers, dredging laborers, drill helper, environmental laborer - nuclear, radiation, toxic and hazardous waste – Level D, flagmen, grade checkers, all hand digging and hand back filling, highway marker placers, landscaping laborers, mesh handlers and placers, puddler, railroad laborers, rip-rap and grouters, right of way laborers, sign, guard rail and fence installers (all types), signalmen, sound barrier installer, storm and sanitary sewer laborers, swampers, truck spotters and dumpers, wrecking of concrete forms, general cleanup:

HEAVY & HIGHWAY	BASE RATE	$21.80
	FRINGE BENEFITS	12.36

GROUP 2: Batter board men (sanitary and storm sewer), brickmason tenders, mortar mixer operator, scaffold builders, burner and welder, bushammers, chain saw operator, concrete saw operators, deckhand scow man, dry cement handlers, environmental laborers – nuclear, radiation, toxic and hazardous waste – Level C, forklift operators for masonry, form setters, green concrete cutting, hand operated grouter and grinder machine operator, jack hammers, lead paint abatement, pavement breakers, paving joint machine, pipe layers – laser operators (non-metallic), plastic pipe fusion, power driven Georgia buggy and wheel barrow, power post hole diggers, precast manhole setters, walk-behind tampers, walk-behind trenchers, sand blasters, concrete chippers, surface grinders, vibrator operators, wagon drillers:

HEAVY & HIGHWAY	BASE RATE	$22.05
	FRINGE BENEFITS	12.36

GROUP 3: Air track driller (all types), asphalt luteman and rakersm gunnite nozzleman, gunnite operators and mixers, grout pump operator, powderman and blaster, side rail setters, rail paved ditches, screw operators, tunnel laborers (free air), and water blasters:

HEAVY & HIGHWAY	BASE RATE	$22.10
	FRINGE BENEFITS	12.36

GROUP 4: Caisson workers (free air), cement finishers, environmental laborer – nuclear, radiation, toxic and hazardous waste – Level A and B, miners and drillers (free air), tunnel blasters, and tunnel mockers (free air), directional and horizontal boring, air track drillers (all types), powder man and blasters, troxler and concrete tester if laborer is utilized:

HEAVY & HIGHWAY	BASE RATE	$22.70
	FRINGE BENEFITS	12.36

OPERATING ENGINEERS:

Group A-1:
NCCCO or OECP Certified; Crane, dragline, hoist (1 drum when used for stack or chimney construction or repair), hoisting engineer (2 or more drums), orangepeel, overhead crane, piledriver, truck crane, tower crane, hydraulic crane:

BASE RATE	$29.95
FRINGE BENEFITS	14.15

CLASSIFICATIONS RATE AND FRINGE BENEFITS

OPERATING ENGINEERS (CONTINUED):

Group A:

Auto patrol, batcher plant, bituminous paver, cable-way, clamshell, concrete mixer (21 cu. ft. or over), concrete pump, crane, crusher plant, derrick, derrick boat, ditching and trenching machine, dragline, dredge engineer, elevator (regardless of ownership when used for hoisting any building material), elevating grader and all types of loaders, hoe-type machine, hoisting engine, locomotive, LeTourneau or carry-all scoop, bulldozer, mechanic, orangepeel bucket, piledriver, power blade, roller (bituminous), roller (earth), roller (rock), scarifier, shovel, tractor shovel, truck crane, well points, winch truck, push dozer, grout pump, high lift, fork lift (regardless of lift height), all types of boom cats, multiple operator, core drill, tow or push boat, A-Frame winch truck, concrete paver, gradeall, hoist, hyster, material pump, pumpcrete, ross carrier,sheepfoot, sideboom, throttle-valve man, rotary drill, power generator, mucking machine, rock spreader attached to equipment, scoopmobile, KeCal loader, tower cranes (French, German and other types), hydrocrane, tugger, backfiller gurries, self-propelled compactor, self-contained hydraulic percussion drill:

BASE RATE	$28.85
FRINGE BENEFITS	14.15

Group B:

All air compressors (200 cu. ft. per min. or greater capacity), bituminous mixer, concrete mixer (under 21 cu. ft.), welding machine, form grader, tractor (50 H.P. and over), bull float, finish machine, outboard motor boat, brakeman, mechanic helper, whirly oiler, tractair and road widening trencher, articulating trucks:

BASE RATE	$26.24
FRINGE BENEFITS	14.15

Group B2:

Greaser on grease facilities servicing heavy equipment:

BASE RATE	$26.65
FRINGE BENEFITS	14.15

Group C:

Bituminous distributor, cement gun, conveyor, mud jack, paving joint machine, pump, tamping machine, tractors (under 50 H.P.), vibrator, oiler, air compressors (under 200 cu. ft. per min. capacity), concrete saw, burlap and curing machine, hydro seeder, power form handling equipment, deckhand oiler, hydraulic post driver:

BASE RATE	$25.95
FRINGE BENEFITS	14.15

PAINTERS:

All Excluding Bridges:

BASE RATE	$19.92
FRINGE BENEFITS	9.57

Bridges:

BASE RATE	$23.92
FRINGE BENEFITS	10.07

CLASSIFICATIONS	RATE AND FRINGE BENEFITS	
PLUMBERS:	BASE RATE	$22.52
	FRINGE BENEFITS	7.80
SHEET METAL:	BASE RATE	$20.40
	FRINGE BENEFITS	7.80
TRUCK DRIVERS:		
Truck helper and warehouseman:	BASE RATE	$23.20
	FRINGE BENEFITS	14.50
Driver, winch truck and A-Frame when used in transporting materials:	BASE RATE	$23.30
	FRINGE BENEFITS	14.50
Driver, (semi-trailer or pole trailer), driver (dump truck, tandem axle), driver of distributor:	BASE RATE	$23.40
	FRINGE BENEFITS	14.50
Driver on mixer trucks (all types):	BASE RATE	$23.45
	FRINGE BENEFITS	14.50
Truck mechanic:	BASE RATE	$23.50
	FRINGE BENEFITS	14.50
Driver (3 tons and under), tire changer and truck mechanic helper:	BASE RATE	$23.53
	FRINGE BENEFITS	14.50
Driver on pavement breakers:	BASE RATE	$23.55
	FRINGE BENEFITS	14.50
Driver (over 3 tons), driver (truck mounted rotary drill):	BASE RATE	$23.74
	FRINGE BENEFITS	14.50
Driver, Euclid and other heavy earth moving equipment and Low Boy:	BASE RATE	$24.31
	FRINGE BENEFITS	14.50
Greaser on greasing facilities:	BASE RATE	$24.40
	FRINGE BENEFITS	14.50

Kentucky Determination No. CR-14-II-HWY dated July 14, 2014

Fringe benefit amounts are applicable for all hours worked except when otherwise noted.

No laborer, workman or mechanic shall be paid at a rate less than that of the General Laborer except those classified as bona fide apprentices registered with the Kentucky State Apprenticeship Supervisor unless otherwise specified in this schedule of wage rates.

These rates are listed pursuant to the Kentucky Determination No. CR-14-II-HWY dated July 14, 2014. Apprentices or trainees shall be permitted to work as such subject to Administrative Regulations adopted by the Commissioner of Workplace Standards. Copies of these regulations will be furnished upon request from any interested person.

Before using apprentices on the job the contractor shall present to the Contracting Officer written evidence of registration of such employees in a program of a State apprenticeship and training agency approved and recognized by the U. S. Bureau of Apprenticeship and Training. In the absence of such a State agency, the contractor shall submit evidence of approval and registration by the U. S. Bureau of Apprenticeship and Training.

The contract or shall submit to the Contracting Officer, written evidence of the established apprenticeship-journeyman ratios and wage rates in the project area, which will be the basis for establishing such ratios and rates for the project under the applicable contract provisions.

TO: EMPLOYERS/EMPLOYEES

PREVAILING WAGE SCHEDULE:

The wages indicated on this wage schedule are the least permitted to be paid for the occupations indicated. When an employee works in more than one classification, the employer must record the numbers of hours worked in each classification at the prescribed hourly base rate.
OVERTIME:
Overtime is to be paid after an employee works eight (8) hours a day or forty (40) hours a week, whichever gives the employee the greater wage. At least time and one-half the base rate is required for all overtime. A laborer, workman or mechanic and an employer may enter into a written agreement or a collective bargaining agreement to work more than eight (8) hours a calendar day but not more than ten (10) hours a calendar day for the straight time hourly rate. Wage violations or questions should be directed to the designated Engineer or to the undersigned.

Diana Castle Radcliffe, P.E.
Director, Division of Construction Procurement
Frankfort, Kentucky 40622

NOTICE OF REQUIREMENT FOR AFFIRMATIVE ACTION TO ENSURE EQUAL EMPLOYMENT OPPORTUNITY (Executive Order 11246)

1. The Offeror's or Bidder's attention is called to the "Equal Opportunity Clause" and the "Standard Federal Equal Employment Specifications" set forth herein.

2. The goals and timetables for minority and female participation, expressed in percentage terms for the Contractor's aggregate work force in each trade on all construction work in the covered area, are as follows:

GOALS FOR MINORITY PARTICIPATION IN EACH TRADE	GOALS FOR FEMALE PARTICIPATION IN EACH TRADE
7.0%	6.9%

These goals are applicable to all the Contractor's construction work (whether or not it is Federal or federally-assisted) performed in the covered area. If the contractor performs construction work in a geographical area located outside of the covered area, it shall apply the goals established for such geographical area where the work is actually performed. With regard to this second area, the contractor also is subject to the goals for both its federally involved and non-federally involved construction.

The Contractor's compliance with the Executive Order and the regulations in CFR Part 60-4 shall be based on its implementation of the Equal Opportunity Clause, specific affirmative action obligations required by the specifications set forth in 41 CFR 60-4, 3(a), and its efforts to meet the goals. The hours of minority and female employment and training must be substantially uniform throughout the length of the contract, and in each trade, and the contractor shall make a good faith effort to employ minorities and women evenly on each of its projects. The transfer of minority or female employees or trainees from Contractor to Contractor or from project to project for the sole purpose of meeting the Contractor's goals shall be a violation of the contract, the Executive Order and the regulations in 41 CFR Part 60-4. Compliance with the goals will be measured against the total work hours performed.

3. The Contractor shall provide written notification to the Director of the Office of Federal Contract Compliance Programs within ten (10) working days of award of any construction subcontract in excess of $10,000.00 at any tier for construction work under the contract resulting from this solicitation. The notification shall list the name, address and telephone number of the subcontractor; employer identification number of the subcontractor; estimated dollar amount of the subcontract; estimated starting and completion dates of the subcontract; and the geographical area in which the subcontract is to be performed. The notification shall be mailed to:

Evelyn Teague, Regional Director
Office of Federal Contract Compliance Programs
61 Forsyth Street, SW, Suite 7B75
Atlanta, Georgia 30303-8609

4. As used in this Notice, and in the contract resulting from this solicitation, the **"covered area"** is Casey County.

PART IV

INSURANCE

INSURANCE

The Contractor shall procure and maintain the following insurance in addition to the insurance required by law:

1) Commercial General Liability-Occurrence form – not less than $2,000,000 General aggregate, $2,000,000 Products & Completed Aggregate, $1,000,000 Personal & Advertising, $1,000,000 each occurrence.

2) Automobile Liability- $1,000,000 per accident

3) Employers Liability:

   a) $100,000 Each Accident Bodily Injury
   b) $500,000 Policy limit Bodily Injury by Disease
   c) $100,000 Each Employee Bodily Injury by Disease

4) The insurance required above must be evidenced by a Certificate of Insurance and this Certificate of Insurance must contain one of the following statements:
   a) "policy contains no deductible clauses."
   b) "policy contains _____ (amount) deductible property damage clause but company will pay claim and collect the deductible from the insured."

5) KENTUCKY WORKMEN'S COMPENSATION INSURANCE. The contractor shall furnish evidence of coverage of all his employees or give evidence of self-insurance by submitting a copy of a certificate issued by the Workmen's Compensation Board.

The cost of insurance is incidental to all contract items. All subcontractors must meet the same minimum insurance requirements.

PART V

BID ITEMS

154208

PROPOSAL BID ITEMS

Report Date 2/24/15

Section: 0001 - ROADWAY

LINE	BID CODE	ALT	DESCRIPTION	QUANTITY	UNIT	UNIT PRIC	FP	AMOUNT
0010	00001		DGA BASE	2,932.00	TON		$	
0020	00100		ASPHALT SEAL AGGREGATE	513.00	TON		$	
0030	00103		ASPHALT SEAL COAT	62.00	TON		$	
0040	01987		DELINEATOR FOR GUARDRAIL BI DIRECTIONAL WHITE	250.00	EACH		$	
0050	02355		GUARDRAIL-STEEL W BEAM-S FACE A	100.00	LF		$	
0060	02360		GUARDRAIL TERMINAL SECTION NO 1	34.00	EACH		$	
0070	02367		GUARDRAIL END TREATMENT TYPE 1	13.00	EACH		$	
0080	02371		GUARDRAIL END TREATMENT TYPE 7	1.00	EACH		$	
0090	02381		REMOVE GUARDRAIL	13,112.50	LF		$	
0100	02562		TEMPORARY SIGNS	150.00	SQFT		$	
0110	02650		MAINTAIN & CONTROL TRAFFIC (CASEY CO. US 127)	1.00	LS		$	
0120	20629NS719		THRIE BEAM TO W BEAM CONNECTOR	4.00	EACH		$	
0130	21380ES719		GUARDRAIL THRIE BEAM	62.50	LF		$	
0140	21802EN		G/R STEEL W BEAM-S FACE (7 FT POST)	14,115.00	LF		$	

Section: 0002 - DEMOBILIZATION

LINE	BID CODE	ALT	DESCRIPTION	QUANTITY	UNIT	UNIT PRIC	FP	AMOUNT
0150	02569		DEMOBILIZATION	1.00	LS		$	