CALL NO. 201

CONTRACT ID. 132223

LAWRENCE - JOHNSON COUNTIES

FED/STATE PROJECT NUMBER 121GR13P081-HSIP

DESCRIPTION KY 172 AND KY 644 IN VARIOUS COUNTIES

WORK TYPE GUARDRAIL

PRIMARY COMPLETION DATE 10/15/2013

LETTING DATE: April 19,2013

Sealed Bids will be received electronically through the Bid Express bidding service until 10:00 AM EASTERN DAYLIGHT TIME April 19,2013. Bids will be publicly announced at 10:00 AM EASTERN DAYLIGHT TIME.

NO PLANS ASSOCIATED WITH THIS PROJECT.

DBE CERTIFICATION REQUIRED - 0%

REQUIRED BID PROPOSAL GUARANTY: Not less than 5% of the total bid.

TABLE OF CONTENTS

PART I SCOPE OF WORK

- PROJECT(S), COMPLETION DATE(S), & LIQUIDATED DAMAGES
- CONTRACT NOTES
- FEDERAL CONTRACT NOTES
- DGA BASE FOR SHOULDERS
- WASTE AND BORROW SITES
- GUARDRAIL
- TRAFFIC CONTROL PLAN 2 LANE
- RIGHT OF WAY NOTES
- UTILITY CLEARANCE
- SKETCH MAP(S)
- MATERIAL SUMMARY
- SUMMARY SHEET(S)
- DETAIL SHEET(S)

PART II SPECIFICATIONS AND STANDARD DRAWINGS

- SPECIFICATIONS REFERENCE
- SUPPLEMENTAL SPECIFICATION
- STANDARD DRAWINGS THAT APPLY ENTIRE LIST 2012
- DELINEATORS FOR GUARDRAIL
- GUARDRAIL COMPONENTS
- STEEL BEAM GUARDRAIL ("W" BEAM)

PART III EMPLOYMENT, WAGE AND RECORD REQUIREMENTS

- FEDERAL-AID CONSTRUCTION CONTRACTS - FHWA 1273
- NONDISCRIMINATION OF EMPLOYEES
- EXECUTIVE BRANCH CODE OF ETHICS
- PROJECT WAGE RATES LOCALITY 2 / FEDERAL (UNDER)
- NOTICE OF REQUIREMENT FOR AFFIRMATIVE ACTION TO ENSURE EEO JOHNSON
- NOTICE OF REQUIREMENT FOR AFFIRMATIVE ACTION TO ENSURE EEO LAWRENCE

PART IV INSURANCE

PART V BID ITEMS

PART I

SCOPE OF WORK

ADMINISTRATIVE DISTRICT - 12

CONTRACT ID - 132223

121GR13P081-HSIP

COUNTY - JOHNSON

PCN - MP05801721302
HSIP 5235 (001)

WEST LIBERTY-PAINTSVILLE ROAD (KY 172) (MP 9.490) FROM 0.331 MILES EAST OF STONECOAL ROAD EXTENDING EAST TO 265 FEET WEST OF KY 1559 (MP 9.900), A DISTANCE OF 0.41 MILES.GUARDRAIL SYP NO. 12-00937.00.

GEOGRAPHIC COORDINATES LATITUDE 37:52:02.00 LONGITUDE 82:52:04.00

COUNTY - LAWRENCE

PCN - MP06406441301
HSIP 9010 (097)

LOUISA-WALBRIDGE ROAD (KY 644) (MP 0.933) FROM 0.237 MILES EAST OF BEECH GROVE LANE EXTENDING EAST TO 0.272 MILES WEST OF WALBRIDGE ROAD (MP 1.313), A DISTANCE OF 0.38 MILES.GUARDRAIL SYP NO. 12-00938.00.

GEOGRAPHIC COORDINATES LATITUDE 38:05:13.00 LONGITUDE 82:35:54.00

COMPLETION DATE(S):

COMPLETED BY 10/15/2013 APPLIES TO ENTIRE CONTRACT

CONTRACT NOTES

PROPOSAL ADDENDA

All addenda to this proposal must be applied when calculating bid and certified in the bid packet submitted to the Kentucky Department of Highways. Failure to use the correct and most recent addenda may result in the bid being rejected.

BID SUBMITTAL

Bidder must use the Department's Expedite Bidding Program available on the Internet web site of the Department of Highways, Division of Construction Procurement. (www.transportation.ky.gov/contract)

The Bidder must download the bid file located on the Bid Express website (www.bidx.com) to prepare a bid packet for submission to the Department. The bidder must submit electronically using Bid Express.

JOINT VENTURE BIDDING

Joint venture bidding is permissible. All companies in the joint venture must be prequalified in one of the work types in the Qualifications for Bidders for the project. The bidders must get a vendor ID for the joint venture from the Division of Construction Procurement and register the joint venture as a bidder on the project. Also, the joint venture must obtain a digital ID from Bid Express to submit a bid. A joint bid bond of 5% may be submitted for both companies or each company may submit a separate bond of 5%.

UNDERGROUND FACILITY DAMAGE PROTECTION

The contractor is advised that the Underground Facility Damage Protection Act of 1994, became law January 1, 1995. It is the contractor's responsibility to determine the impact of the act regarding this project, and take all steps necessary to be in compliance with the provision of the act.

SPECIAL NOTE FOR PIPE INSPECTION

Contrary to Section 701.03.08 of the 2012 Standard Specifications for Road and Bridge Construction and Kentucky Method 64-114, certification by the Kentucky Transportation Center for prequalified Contractors to perform laser/video inspection is not required on this contract. It will continue to be a requirement for the Contractor performing any laser/video pipe inspection to be prequalified for this specialized item with the Kentucky Transportation Cabinet-Division of Construction Procurement.

REGISTRATION WITH THE SECRETARY OF STATE BY A FOREIGN ENTITY

Pursuant to KRS 176.085(1)(b), an agency, department, office, or political subdivision of the Commonwealth of Kentucky shall not award a state contract to a person that is a foreign entity required by KRS 14A.9-010 to obtain a certificate of authority to transact business in the Commonwealth ("certificate") from the Secretary of State under KRS 14A.9-030 unless the person produces the certificate within fourteen (14) days of the bid or proposal opening. If the foreign entity is not required to obtain a certificate as provided in KRS 14A.9-010, the foreign entity should identify the applicable exception. Foreign entity is defined within KRS 14A.1-070.

For all foreign entities required to obtain a certificate of authority to transact business in the Commonwealth, if a copy of the certificate is not received by the contracting agency within the time frame identified above, the foreign entity's solicitation response shall be deemed non-responsive or the awarded contract shall be cancelled.

Businesses can register with the Secretary of State at https://secure.kentucky.gov/sos/ftbr/welcome.aspx .

SPECIAL NOTE FOR PROJECT QUESTIONS DURING ADVERTISEMENT

Questions about projects during the advertisement should be submitted in writing to the Division of Construction Procurement. This may be done by fax (502) 564-7299 or email to kytc.projectquestions@ky.gov. The Department will attempt to answer all submitted questions. The Department reserves the right not to answer if the question is not pertinent or does not aid in clarifying the project intent.

The deadline for posting answers will be 3:00 pm Eastern Daylight Time, the day preceding the Letting. Questions may be submitted until this deadline with the understanding that the later a question is submitted, the less likely an answer will be able to be provided.

The questions and answers will be posted for each Letting under the heading "Questions & Answers" on the Construction Procurement website (www.transportation.ky.gov/contract). The answers provided shall be considered part of this Special Note and, in case of a discrepancy, will govern over all other bidding documents.

HARDWOOD REMOVAL RESTRICTIONS

The Kentucky Division of Forestry has imposed a quarantine in Anderson, Boone, Bourbon, Boyd, Boyle, Bracken, Campbell, Carroll, Fayette, Franklin, Gallatin, Garrard,

Grant, Greenup, Hardin, Harrison, Henry, Jefferson, Jessamine, Kenton, Oldham, Owen, Pendleton, Scott, Shelby, Trimble, and Woodford Counties to prevent the spread of an invasive insect, the emerald ash borer. Hardwood cut in conjunction with the project may not be removed from the county of its origin. Chipping or burning on site is the preferred method of disposal.

INSTRUCTIONS FOR EXCESS MATERIAL SITES AND BORROW SITES

Identification of excess material sites and borrow sites shall be the responsibility of the Contractor. The Contractor shall be responsible for compliance with all applicable state and federal laws and may wish to consult with the US Fish and Wildlife Service to seek protection under Section 10 of the Endangered Species Act for these activities.

ACCESS TO RECORDS

The contractor, as defined in KRS 45A.030 (9) agrees that the contracting agency, the Finance and Administration Cabinet, the Auditor of Public Accounts, and the Legislative Research Commission, or their duly authorized representatives, shall have access to any books, documents, papers, records, or other evidence, which are directly pertinent to this contract for the purpose of financial audit or program review. Records and other prequalification information confidentially disclosed as part of the bid process shall not be deemed as directly pertinent to the contract and shall be exempt from disclosure as provided in KRS 61.878(1)(c). The contractor also recognizes that any books, documents, papers, records, or other evidence, received during a financial audit or program review shall be subject to the Kentucky Open Records Act, KRS 61.870 to 61.884.

In the event of a dispute between the contractor and the contracting agency, Attorney General, or the Auditor of Public Accounts over documents that are eligible for production and review, the Finance and Administration Cabinet shall review the dispute and issue a determination, in accordance with Secretary's Order 11-004. (See attachment)

09/26/2012

FEDERAL CONTRACT NOTES

The Kentucky Department of Highways, in accordance with the Regulations of the United States Department of Transportation 23 CFR 635.112 (h), hereby notifies all bidders that failure by a bidder to comply with all applicable sections of the current Kentucky Standard Specifications, including, but not limited to the following, may result in a bid not being considered responsive and thus not eligible to be considered for award:

102.02 Current Capacity Rating 102.10 Delivery of Proposals
102.08 Irregular Proposals 102.14 Disqualification of Bidders
102.09 Proposal Guaranty

CIVIL RIGHTS ACT OF 1964

The Kentucky Department of Highways, in accordance with the provisions of Title VI of the Civil Rights Act of 1964 (78 Stat. 252) and the Regulations of the Federal Department of Transportation (49 C.F.R., Part 21), issued pursuant to such Act, hereby notifies all bidders that it will affirmatively insure that the contract entered into pursuant to this advertisement will be awarded to the lowest responsible bidder without discrimination on the ground of race, color, or national origin.

NOTICE TO ALL BIDDERS

To report bid rigging activities call: 1-800-424-9071.

The U.S. Department of Transportation (DOT) operates the above toll-free “hotline” Monday through Friday, 8:00 a.m. to 5:00 p.m. eastern time. Anyone with knowledge of possible bid rigging, bidder collusion, or other fraudulent activities should use the “hotline” to report such activities.

The “hotline” is part of the DOT’s continuing effort to identify and investigate highway construction contract fraud and abuse and is operated under the direction of the DOT Inspector General. All information will be treated confidentially and caller anonymity will be respected.

SECOND TIER SUBCONTRACTS

Second Tier subcontracts on federally assisted projects shall be permitted. However, in the case of DBE’s, second tier subcontracts will only be permitted where the other subcontractor is also a DBE. All second tier subcontracts shall have the consent of both the Contractor and the Engineer.

DISADVANTAGED BUSINESS ENTERPRISE PROGRAM

It is the policy of the Kentucky Transportation Cabinet ("the Cabinet") that Disadvantaged Business Enterprises ("DBE") shall have the opportunity to participate in the performance of highway construction projects financed in whole or in part by Federal Funds in order to create a level playing field for all businesses who wish to contract with the Cabinet. To that end, the Cabinet will comply with the regulations found in 49 CFR Part 26, and the definitions and requirements contained therein shall be adopted as if set out verbatim herein.

The Cabinet, contractors, subcontractors, and sub-recipients shall not discriminate on the basis of race, color, national origin, or sex in the performance of work performed pursuant to Cabinet contracts. The contractor shall carry out applicable requirements of 49 CFR 26 in the award and administration of federally assisted highway construction projects. The contractor will include this provision in all its subcontracts and supply agreements pertaining to contracts with the Cabinet.

Failure by the contractor to carry out these requirements is a material breach of its contract with the Cabinet, which may result in the termination of the contract or such other remedy as the Cabinet deems necessary.

DBE GOAL

The Disadvantaged Business Enterprise (DBE) goal established for this contract, as listed on the front page of the proposal, is the percentage of the total value of the contract.

The contractor shall exercise all necessary and reasonable steps to ensure that Disadvantaged Business Enterprises participate in a least the percent of the contract as set forth above as goals for this contract.

OBLIGATION OF CONTRACTORS

Each contractor prequalified to perform work on Cabinet projects shall designate and make known to the Cabinet a liaison officer who is assigned the responsibility of effectively administering and promoting an active program for utilization of DBEs.

If a formal goal has not been designated for the contract, all contractors are encouraged to consider DBEs for subcontract work as well as for the supply of material and services needed to perform this work.

Contractors are encouraged to use the services of banks owned and controlled by minorities and women.

CERTIFICATION OF CONTRACT GOAL

Contractors shall include the following certification in bids for projects for which a DBE goal has been established. BIDS SUBMITTED WHICH DO NOT INCLUDE CERTIFICATION OF DBE PARTICIPATION WILL NOT BE ACCEPTED. These bids will not be considered for award by the Cabinet and they will be returned to the bidder.

"The bidder certifies that it has secured participation by Disadvantaged Business Enterprises ("DBE") in the amount of ____ percent of the total value of this contract and that the DBE participation is in compliance with the requirements of 49 CFR 26 and the policies of the Kentucky Transportation Cabinet pertaining to the DBE Program."

The certification statement is located in the electronic bid file. All contractors must certify their DBE participation on that page. DBEs utilized in achieving the DBE goal must be certified and prequalified for the work items at the time the bid is submitted.

DBE PARTICIPATION PLAN

Lowest responsive bidders must submit the *DBE Plan/ Subcontractor Request*, form TC 63-35 DBE, within 10 days of the letting. This is necessary before the Awards Committee will review and make a recommendation. **The project will not be considered for award prior to submission and approval of the apparent low bidder's DBE Plan/Subcontractor Request.**

The DBE Participation Plan shall include the following:

1 Name and address of DBE Subcontractor(s) and/or supplier(s) intended to be used in the proposed project;

2 Description of the work each is to perform including the work item , unit, quantity, unit price and total amount of the work to be performed by the individual DBE. The Project Code Number (PCN), Category Number, and the Project Line Number can be found in the "material listing" on the Construction Procurement website under the specific letting;

3 The dollar value of each proposed DBE subcontract and the percentage of total project contract value this represents. DBE participation may be counted as follows; a) If DBE suppliers and manufactures assume actual and contractual responsibility, the dollar value of materials to be furnished will be counted toward the goal as follows:

- The entire expenditure paid to a DBE manufacturer;
- 60 percent of expenditures to DBE suppliers that are not manufacturers provided the supplier is a regular dealer in the product involved. A regular dealer must be engaged in, as its principal business and in its own name, the sale of products to

the public, maintain an inventory and own and operate distribution equipment; and

- The amount of fees or commissions charged by the DBE firms for a bona fide service, such as professional, technical, consultant, or managerial services and assistance in the procurement of essential personnel, facilities, equipment, materials, supplies, delivery of materials and supplies or for furnishing bonds, or insurance, providing such fees or commissions are determined to be reasonable and customary.

b) The dollar value of services provided by DBEs such as quality control testing, equipment repair and maintenance, engineering, staking, etc.;

c) The dollar value of joint ventures. DBE credit for joint ventures will be limited to the dollar amount of the work actually performed by the DBE in the joint venture;

4 Written and signed documentation of the bidder's commitment to use a DBE contractor whose participation is being utilized to meet the DBE goal; and

5 Written and signed confirmation from the DBE that it is participating in the contract as provided in the prime contractor's commitment.

UPON AWARD AND BEFORE A WORK ORDER WILL BE ISSUED

Contractors must submit the signed subcontract between the contractor and the DBE contractor, the DBE's certificate of insurance, and an affidavit for bidders, offerors, and contractors from the DBE to the Division of Construction Procurement. The affidavit can be found on the Construction Procurement website. If the DBE is a supplier of materials for the project, a signed purchase order and an affidavit for bidders, offerors, and contractors must be submitted to the Division of Construction Procurement.

Changes to DBE Participation Plans must be approved by the Cabinet. The Cabinet may consider extenuating circumstances including, but not limited to, changes in the nature or scope of the project, the inability or unwillingness of a DBE to perform the work in accordance with the bid, and/or other circumstances beyond the control of the prime contractor.

CONSIDERATION OF GOOD FAITH EFFORTS REQUESTS

If the DBE participation submitted in the bid by the apparent lowest responsive bidder does not meet or exceed the DBE contract goal, the apparent lowest responsive bidder must submit a Good Faith Effort Package to satisfy the Cabinet that sufficient good faith efforts were made to meet the contract goals prior to submission of the bid. Efforts to increase the goal after bid submission will not be considered in justifying the good faith effort, unless the contractor can show that the proposed DBE was solicited prior to the letting date. DBEs utilized in achieving the DBE goal must be certified and prequalified for the work items at the time the bid is submitted. One complete set and nine (9) copies of this information must be received in the

office of the Division of Contract Procurement no later than 12:00 noon of the tenth calendar day after receipt of notification that they are the apparent low bidder.

Where the information submitted includes repetitious solicitation letters it will be acceptable to submit a sample representative letter along with a distribution list of the firms solicited. Documentation of DBE quotations shall be a part of the good faith effort submittal as necessary to demonstrate compliance with the factors listed below which the Cabinet considers in judging good faith efforts. This documentation may include written subcontractors' quotations, telephone log notations of verbal quotations, or other types of quotation documentation.

The Good Faith Effort Package shall include, but may not be limited to information showing evidence of the following:

1 Whether the bidder attended any pre-bid meetings that were scheduled by the Cabinet to inform DBEs of subcontracting opportunities;
2 Whether the bidder provided solicitations through all reasonable and available means;
3 Whether the bidder provided written notice to all DBEs listed in the DBE directory at the time of the letting who are prequalified in the areas of work that the bidder will be subcontracting;
4 Whether the bidder followed up initial solicitations of interest by contacting DBEs to determine with certainly whether they were interested. If a reasonable amount of DBEs within the targeted districts do not provide an intent to quote or no DBEs are prequalified in the subcontracted areas, the bidder must notify the DBE Liaison in the Office of Minority Affairs to give notification of the bidder's inability to get DBE quotes;
5 Whether the bidder selected portions of the work to be performed by DBEs in order to increase the likelihood of meeting the contract goals. This includes, where appropriate, breaking out contract work items into economically feasible units to facilitate DBE participation, even when the prime contractor might otherwise perform these work items with its own forces;
6 Whether the bidder provided interested DBEs with adequate and timely information about the plans, specifications, and requirements of the contract;
7 Whether the bidder negotiated in good faith with interested DBEs not rejecting them as unqualified without sound reasons based on a thorough investigation of their capabilities. Any rejection should be so noted in writing with a description as to why an agreement could not be reached;
8 Whether quotations were received from interested DBE firms but were rejected as unacceptable without sound reasons why the quotations were considered unacceptable. The fact that the DBE firm's quotation for the work is not the lowest quotation received will not in itself be considered as a sound reason for rejecting the quotation as unacceptable. The fact that the bidder has the ability and/or desire to perform the contract work with its own forces will not be considered a sound reason for rejecting a DBE quote. Nothing in this provision shall be construed to require the bidder to accept unreasonable quotes in order to satisfy DBE goals;
9 Whether the bidder specifically negotiated with subcontractors to assume part of the responsibility to meet the contract DBE goal when the work to be subcontracted includes potential DBE participation;
10 Whether the bidder made any efforts and/or offered assistance to interested DBEs in obtaining the necessary equipment, supplies, materials, insurance and/or bonding to satisfy the

work requirements of the bid proposal; and

11 Any other evidence that the bidder submits which may show that the bidder has made reasonable good faith efforts to include DBE participation.

FAILURE TO MEET GOOD FAITH REQUIREMENT

Where the apparent lowest responsive bidder fails to submit sufficient participation by DBE firms to meet the contract goal and upon a determination by the Good Faith Committee based upon the information submitted that the apparent lowest responsive bidder failed to make sufficient reasonable efforts to meet the contract goal, the bidder will be offered the opportunity to meet in person for administrative reconsideration. The bidder will be notified of the Committee's decision within 24 hours of its decision. The bidder will have 24 hours to request reconsideration of the Committee's decision. The reconsideration meeting will be held within two days of the receipt of a request by the bidder for reconsideration.

The request for reconsideration will be heard by the Office of the Secretary. The bidder will have the opportunity to present written documentation or argument concerning the issue of whether it met the goal or made an adequate good faith effort. The bidder will receive a written decision on the reconsideration explaining the basis for the finding that the bidder did or did not meet the goal or made adequate Good Faith efforts to do so.

The result of the reconsideration process is not administratively appealable to the Cabinet or to the United States Department of Transportation.

The Cabinet reserves the right to award the contract to the next lowest responsive bidder or to rebid the contract in the event that the contract is not awarded to the low bidder as the result of a failure to meet the good faith requirement.

SANCTIONS FOR FAILURE TO MEET DBE REQUIREMENTS OF THE PROJECT

Failure by the prime contractor to fulfill the DBE requirements of a project under contract or to demonstrate good faith efforts to meet the goal constitutes a breach of contract. When this occurs, the Cabinet will hold the prime contractor accountable, as would be the case with all other contract provisions. Therefore, the contractor's failure to carry our the DBE contract requirements shall constitute a breach of contract and as such the Cabinet reserves the right to exercise all administrative remedies at its disposal including, but not limited to the following:

- Disallow credit toward the DBE goal;
- Withholding progress payments;
- Withholding payment to the prime in an amount equal to the unmet portion of the contract goal; and/or
- Termination of the contract.

PROMPT PAYMENT

The prime contractor will be required to pay the DBE within seven (7) working days after he or she has received payment from the Kentucky Transportation Cabinet for work performed or materials furnished.

CONTRACTOR REPORTING

All contractors must keep detailed records and provide reports to the Cabinet on their progress in meeting the DBE requirement on any highway contract. These records may include, but shall not be limited to payroll, lease agreements, cancelled payroll checks, executed subcontracting agreements, etc. Prime contractors will be required to submit certified reports on monies paid to each DBE subcontractor or supplier utilized to meet a DBE goal.

Payment information that needs to be reported includes date the payment is sent to the DBE, check number, Contract ID, amount of payment and the check date. Before Final Payment is made on this contract, the Prime Contractor will certify that all payments were made to the DBE subcontractor and/or DBE suppliers.

The Prime Contractor should supply the payment information at the time the DBE is compensated for their work. Form to use is located at:
http://transportation.ky.gov/Construction/Pages/Subcontracts.aspx

Photocopied payments and completed form to be submitted to: Office of Civil Rights and Small Business Development 6th Floor West 200 Mero Street Frankfort, KY 40622

DEFAULT OR DECERTIFICATION OF THE DBE

If the DBE subcontractor or supplier is decertified or defaults in the performance of its work, and the overall goal cannot be credited for the uncompleted work, the prime contractor may utilize a substitute DBE or elect to fulfill the DBE goal with another DBE on a different work item. If after exerting good faith effort in accordance with the Cabinet's Good Faith Effort policies and procedures, the prime contractor is unable to replace the DBE, then the unmet portion of the goal may be waived at the discretion of the Cabinet.

09/14/11

DGA BASE FOR SHOULDERS

Unless otherwise noted, the Department estimates the rate of application for DGA Base for Shoulders to be 115 lbs/sy per inch of depth. The Department will not measure necessary grading and/or shaping of existing shoulders prior to placing of DGA Base, but shall be incidental to the Contract unit price per ton for DGA Base.

Accept payment at the Contract unit price per ton as full compensation for all labor, materials, equipment, and incidentals for grading and/or shaping of existing shoulders and furnishing, placing, and compacting the DGA Base.

SPECIAL PROVISION FOR WASTE AND BORROW SITES

Obtain U.S. Army Corps of Engineer's approval before utilizing a waste or borrow site that involves "Waters of the United States". The Corps of Engineers defines "Waters of the United States" as perennial or intermittent streams, ponds or wetlands. The Corps of Engineers also considers ephemeral streams, typically dry except during rainfall but having a defined drainage channel, to be jurisdictional waters. Direct questions concerning any potential impacts to "Waters of the United States" to the attention of the appropriate District Office for the Corps of Engineers for a determination prior to disturbance. Be responsible for any fees associated with obtaining approval for waste and borrow sites from the U.S. Army Corps of Engineer or other appropriate regulatory agencies.

1-296 Waste & Borrow Sites
01/02/2012

SPECIAL NOTES FOR GUARDRAIL

I. DESCRIPTION

Except as specified herein, perform all work in accordance with the Department's Standard and Supplemental Specifications and Standard and Sepia Drawings, current editions. Article references are to the Standard Specifications.

Furnish all equipment, labor, materials, and incidentals for the following work items:

> (1) Site preparation; (2) Guardrail, Guardrail with Extra Length Posts, End Treatments, Bridge End Connectors, and Terminal Sections, as applicable; (3) Delineators for guardrail; (4) Maintain and control traffic; (5) **Install wall cribbing furnished by the Department of Highways;** and (6) all other work specified as part of this contract.

II. MATERIALS

Except as specified herein, provide for all materials to be sampled and tested in accordance with the Department's Sampling Manual and make the materials available for sampling a sufficient time in advance of the use of the materials to allow for the necessary time for testing.

A Maintain and Control Traffic. See Traffic Control Plan.

B. Guardrail. Furnish guardrail system components according to section 814 and the Standard Drawings; except use steel posts only, no alternates. Furnish approximately 136 Extra Length Posts (9 foot length, steel-no alternates) for KY 172 and approximately 136 Extra Length Posts (9 foot length, steel-no alternates) for KY 644.

C. Delineators for Guardrail. Furnish Bi-directional white Delineators for Guardrail according to the Delineators for Guardrail Sepia Drawing.

D. Wall Cribbing. Use wall cribbing: recycled (used) steel "W" beam guardrail. **Cribbing material will furnished by the Department of Highways.** Wall cribbing will be located at the ***Department of Highways Johnson and Lawrence County Maintenance Facilities, as applicable***.

III. CONSTRUCTION METHODS

A. Maintain and Control Traffic. See Traffic Control Plan.

B. Site Preparation. Be responsible for all site preparation, including but not limited to, clearing and grubbing, excavation, embankment, and removal of all obstructions or any other items; regrading, reshaping, adding and compacting of suitable materials on the existing shoulders to provide proper template or foundation for the guardrail; temporary pollution and erosion control; disposal, of excess and waste materials and debris; and final dressing, cleanup, and seeding and protection. Perform all site preparation as approved or directed by the engineer.

C. Guardrail. Except as specified herein, construct guardrail system according to Section 719 and the Standard Drawings. Locations listed on the summary and/or shown on the drawings are approximate only. The Engineer will determine the exact termini for individual guardrail installations and locations for Extra Length Posts at the time of construction. Unless directed otherwise by the Engineer, provide a minimum two (2) foot shoulder width. Construct radii at entrances and road intersections as directed by the Engineer.

Erect guardrail to the lines and grades shown on current Standard Drawings or as directed by the Engineer by any method approved by the Engineer which allows construction of the guardrail to the true grade without apparent sags.

When installing guardrail, do not leave the blunt end exposed where it would be hazardous to the public. When it is not practical to complete the construction of the guardrail and the permanent end treatments and terminal sections first, provide a temporary end by connecting at least 25 feet of rail to the last post, and by slightly flaring, and burying the end of the rail completely into the existing shoulder. If left overnight, place a drum with bridge panel in advance of the guardrail end and maintain during use.

D. Delineators for Guardrail. Construct Delineators for Guardrail according to the Delineators for Guardrail Sepia Drawing.

E. Installation of Wall Cribbing. Install Cribbing as shown on Cribbing detail sheet or as directed by the Engineer. If necessary, the Engineer will direct changes to this procedure. Furnish all labor and equipment to deliver and install wall cribbing at the guardrail locations. Wall cribbing shall be lapped, bolted, and attached solid to the guardrail posts.

F. Property Damage. Be responsible for all damage to public and/or private property resulting from the work. Restore damaged roadway features and private property at no additional cost to the Department.

G. Coordination with Utility Companies. Locate all underground, above ground and overhead utilities prior to beginning construction. Be responsible for contacting and maintaining liaison with all utility companies that have utilities located within the project limits. Do not disturb existing overhead or underground utilities. It is not anticipated that any utility facilities will need to be relocated and/or adjusted; however, in the event

that it is discovered that the work does require that utilities be relocated and/or adjusted, the utility companies will work concurrently with the Contractor while relocating their facilities. Be responsible for repairing all utility damage that occurs as a result of guardrail operations at no additional cost the Department.

H. Right of Way Limits. The Department has not established exact limits of the Right-of-Way. Limit work activities to obvious Right-of-Way, permanent or temporary easements, and work areas secured by the Department through consent and release of the adjacent property owners. Be responsible for all encroachments onto private lands.

I. Disposal of Waste. Dispose of all removed concrete, debris, and other waste and debris off the Right-of-Way at sites obtained by the Contractor at no additional cost to the Department. See Special Note for Waste and Borrow.

J. Final Dressing, Clean Up, and Seeding and Protection. Apply Class A Final Dressing to all disturbed areas, both on and off the Right-of-Way. Sow all disturbed earthen areas according to the Special Note for Erosion Control.

IV. METHOD OF MEASUREMENT

A. Maintain and Control Traffic. See Traffic Control Plan.

B. Site preparation. Other than the bid items listed, the Department will not measure Site Preparation for separate payment but shall be incidental to Guardrail, End Treatments, Bridge End Connectors, and Terminal Sections as applicable.

C. Guardrail. See Section 719.04.

D. Delineators for Guardrail. See Delineators for Guardrail Sepia Drawing.

E. Wall Cribbing. The Department will measure this item in square feet finished in-place area. Laps, cutoffs, excess and waste will not be measured for payment.

V. BASIS OF PAYMENT

A. Maintain and Control Traffic. See Traffic Control Plan.

B. Guardrail. See Section 719.05.

C. Delineators for Guardrail. See Delineators for Guardrail Sepia Drawing.

D. Wall Cribbing. The Department will pay for the completed and accepted

quantities under the bid item of “Wall Cribbing.” Payment will be based on the quantity installed in the field. The Department will not make separate payment for the hauling of the wall cribbing to the construction site. The Department will consider payment full compensation for all work required on the project.

TRAFFIC CONTROL PLAN

TRAFFIC CONTROL GENERAL

Except as provided herein, maintain and control traffic in accordance with the Standard and Supplemental Specifications and the Standard and Sepia Drawings, current editions. Except for the roadway and traffic control bid items listed, all items of work necessary to maintain and control traffic will be paid at the lump sum bid price to "Maintain and Control Traffic".

Contrary to Section 106.01, furnish new, or used in like new condition, traffic control devices at the beginning of the work and maintain in like new condition until completion of the work.

PROJECT PHASING & CONSTRUCTION PROCEDURES

The Engineer may specify days and hours when lane closures will not be allowed.

Maintain alternating one way traffic during construction. Provide a minimum clear lane width of 9 feet on both KY 172 and KY 644; however, provide for passage of vehicles of up to 16 feet in width. If traffic should be stopped due to construction operations, and a school bus on an official run arrives on the scene, make provisions for the passage of the bus as quickly as possible.

LANE CLOSURES

Do not leave lane closures in place during non-working hours.

SIGNS

Contrary to section 112.04.02, only long term signs (signs intended to be continuously in place for more than 3 days) will be measured for payment; short term signs (signs intended to be left in place for 3 days or less) will not be measured for payment but will be incidental to Maintain and Control Traffic.

CHANGEABLE MESSAGE SIGNS

If deemed necessary by the Engineer, the Department will furnish, operate, and maintain Changeable Message Signs.

BARRICADES

The Department will not measure barricades used in lieu of barrels and cones for channelization or delineation, but shall be incidental to Maintain and Control Traffic according to Section 112.04.01.

The Department will measure barricades used to protect pavement removal areas in individual units Each. The Department will measure for payment the maximum number of barricades in concurrent use at the same time on a single day on all sections of the contract. The Department will measure individual barricades only once for payment, regardless of how many times they are set, reset, removed, and relocated during the duration of the project. The Department will not measure replacements for damaged barricades the Engineer directs to be replaced due to poor condition or reflectivity. Retain possession of the Barricades upon completion of construction.

PAVEMENT MARKINGS

If there is to be a deviation from the existing striping plan, the Engineer will furnish the Contractor a striping plan prior to placement of the final surface course.

Install Temporary Striping according to Section 112 with the following exception:

> If the Contractor's operations or phasing requires temporary markings that must subsequently be removed from the final surface course, use an approved removable lane tape; however, the Department will not measure removable lane tape for separate payment, but will measure and pay for removable lane tape as temporary striping.

PAVEMENT EDGE DROP-OFFS

Do not allow a pavement edge between opposing directions of traffic or lanes that traffic is expected to cross in a lane change situation with an elevation difference greater than 1½". Place Warning signs (MUTCD W8-11 or W8-9A) in advance of and at 1500' intervals throughout the drop-off area. Dual post the signs on both sides of the traveled way. Wedge all transverse transitions between resurfaced and unresurfaced areas which traffic may cross with asphalt mixture for leveling and wedging. Remove the wedges prior to placement of the final surface course.

Protect pavement edges that traffic is not expected to cross, except accidentally, as follows:

Less than 2" - No protection required.

Guardrail Installation – Either existing or new guardrail shall be in place during periods when lane closures are prohibited by the Traffic Control Plan. Protect with lane closure during active operations. Protect partially completed guardrail installations with a shoulder closure during non-working hours.

Right-of-Way Certification Form

Revised 2/22/11

☐ Federal Funded ☑ Original

☐ State Funded ☐ Re-Certification

This form must be completed and submitted to FHWA with the PS&E package for federal-aid funded Interstate, Appalachia, and Major projects. This form shall also be submitted to FHWA for all federal-aid projects that fall under Conditions No. 2 or 3 outlined elsewhere in this form. When Condition No. 2 or 3 apply, KYTC shall resubmit this ROW Certification prior to construction contract Award. For all other federal-aid projects, this form shall be completed and retained in the KYTC project file.

Date: 2-25-2013

Project Name: New Guardrail KY 172 Letting Date: 2-4-2013

Project #: FD52 058 0172 009-010 County: Johnson

Item #: 12-00937.00 Federal #: HSIP 5235 (001)

Description of Project: New Guardrail HSIP KY 172 MP 9.490-9.900

Projects that require NO new or additional right-of-way acquisitions and/or relocations

☐ The proposed transportation improvement will be built within the existing rights-of -way and there are no properties to be acquired, individuals, families, and businesses ("relocatees") to be relocated, or improvements to be removed as a part of this project.

Projects that require new or additional right-of-way acquisitions and/or relocations

☐ Per 23 CFR 635.309, the KYTC hereby certify that all relocatees have been relocated to decent, safe, and sanitary housing or that KYTC has made available to relocatees adequate replacement housing in accordance with the provisions of the current FHWA directive(s) covering the administration of the Highway Relocation Assistance Program and that at least one of the following three conditions has been met. (Check those that apply.)

☐ **Condition 1.** All necessary rights-of-way, including control of access rights when applicable, have been acquired including legal and physical possession. Trial or appeal of cases may be pending in court but legal possession has been obtained. There may be some improvements remaining on the right-of-way, but all occupants have vacated the lands and improvements, and KYTC has physical possession and the rights to remove, salvage, or demolish all improvements and enter on all land. Fair market value has been paid or deposited with the court.

☐ **Condition 2.** Although all necessary rights-of-way have not been fully acquired, the right to occupy and to use all rights-of-way required for the proper execution of the project has been acquired. Trial or appeal of some parcels may be pending in court and on other parcels full legal possession has not been obtained, but right of entry has been obtained, the occupants of all lands and improvements have vacated, and KYTC has physical possession and right to remove, salvage, or demolish all improvements. Fair market value has been paid or deposited with the court for most parcels. Fair market value for all pending parcels will be paid or deposited with the court prior to AWARD of construction contract. (See note 1 below.)

Note 1: The KYTC shall re-submit a right-of-way certification form for this project prior to AWARD of all Federal-Aid construction contracts. Award must not to be made until after KYTC has obtained full legal possession and fair market value for all parcels has been paid or deposited with the court and FHWA has concurred in the re-submitted right-of-way certification.

Right-of-Way Certification Form

Revised 2/22/11

☐ **Condition 3.** The acquisition or right of occupancy and use of a few remaining parcels are not complete and/or some parcels still have occupants. However, all remaining occupants have had replacement housing made available to them in accordance with 49 CFR 24.204. The KYTC is hereby requesting authorization to advertise this project for bids and to proceed with bid letting even though the necessary rights-of-way will not be fully acquired, and/or some occupants will not be relocated, and/or the fair market value will not be paid or deposited with the court for some parcels until after bid letting. KYTC will fully meet all the requirements outlined in 23 CFR 635.309(c)(3) and 49 CFR 24.102(j) and will expedite completion of all acquisitions, relocations, and full payments after bid letting and prior to AWARD of the construction contract or force account construction. A full explanation and reason for this request, including identification of each such parcel and dates on which acquisitions, payments, and relocations will be completed, is attached to this certification form for FHWA concurrence. (See note 2.)

Note 2: The KYTC may request authorization on this basis only in unique and unusual circumstances. Proceeding to bid letting shall be the exception and never become the rule. In all cases, the KYTC shall make extraordinary efforts to expedite completion of the acquisition, payment for all affected parcels, and the relocation of all relocatees prior to AWARD of all Federal-Aid construction contracts or force account construction.

Approved: Joe Tschett (Printed Name) _____ (Signature) Right-of-Way Supervisor

3/14/2013

Approved: DAVID L. ORR (Printed Name) _____ (Signature) KYTC, Director of ROW &Utilities

Approved: _____ (Printed Name) _____ (Signature) FHWA, ROW Officer (when applicable)

Right-of-Way Certification Form

Revised 2/22/11

Date: 2-25-2013

Project Name: New Guardrail KY 172
Project #: FD52 058 0172 009-010
Item #: 12-00937.00
Letting Date: 2-4-2013

County: Johnson
Federal #: HSIP 5235 (001)

This project has 0 total number of parcels to be acquired, and 0 total number of individuals or families to be relocated, as well as 0 total number of businesses to be relocated.

0 Parcels where acquired by a signed fee simple deed and fair market value has been paid

0 Parcels have been acquired by IOJ through condemnation and fair market value has been deposited with the court

0 Parcels have not been acquired at this time (*explain below for each parcel*)

0 Parcels have been acquired or have a "right of entry" but fair market value has not been paid or has not been deposited with the court *(explain below for each parcel)*

0 Relocatees have not been relocated from parcels ____, ____, ____, ____, ____, ____, and ____ *(explain below for each parcel)*

Parcel #	Name/Station	Explanation for delayed acquisition, delayed relocation, or delayed payment of fair market value	Proposed date of payment or of relocation

There are 0 billboards and/or 0 cemeteries involved on this project.

There are 0 water or monitoring wells on parcels ____, ____, ____, ____, and ____. All have been acquired and are the responsibility of the project contractor to close/cap.

Form Effective Date: April 1, 2006
Last Revised: February 22, 2011

Right-of-Way Certification Form

Revised 2/22/11

☐ Federal Funded ☑ Original

☐ State Funded ☐ Re-Certification

This form must be completed and submitted to FHWA with the PS&E package for federal-aid funded Interstate, Appalachia, and Major projects. This form shall also be submitted to FHWA for all federal-aid projects that fall under Conditions No. 2 or 3 outlined elsewhere in this form. When Condition No. 2 or 3 apply, KYTC shall resubmit this ROW Certification prior to construction contract Award. For all other federal-aid projects, this form shall be completed and retained in the KYTC project file.

Date: 2-25-2013

Project Name: NEW GUARDRAIL KY 644 Letting Date: 2-4-2013

Project #: FD52 064 0644 000-002 County: Lawrence

Item #: 12-00938.00 Federal #: HSIP 9010 (097)

Description of Project: New Guardrail HSIP KY 644 MP 0.933-1.313

Projects that require NO new or additional right-of-way acquisitions and/or relocations

☐ The proposed transportation improvement will be built within the existing rights-of -way and there are no properties to be acquired, individuals, families, and businesses ("relocatees") to be relocated, or improvements to be removed as a part of this project.

Projects that require new or additional right-of-way acquisitions and/or relocations

☐ Per 23 CFR 635.309, the KYTC hereby certify that all relocatees have been relocated to decent, safe, and sanitary housing or that KYTC has made available to relocatees adequate replacement housing in accordance with the provisions of the current FHWA directive(s) covering the administration of the Highway Relocation Assistance Program and that at least one of the following three conditions has been met. (Check those that apply.)

☐ **Condition 1.** All necessary rights-of-way, including control of access rights when applicable, have been acquired including legal and physical possession. Trial or appeal of cases may be pending in court but legal possession has been obtained. There may be some improvements remaining on the right-of-way, but all occupants have vacated the lands and improvements, and KYTC has physical possession and the rights to remove, salvage, or demolish all improvements and enter on all land. Fair market value has been paid or deposited with the court.

☐ **Condition 2.** Although all necessary rights-of-way have not been fully acquired, the right to occupy and to use all rights-of-way required for the proper execution of the project has been acquired. Trial or appeal of some parcels may be pending in court and on other parcels full legal possession has not been obtained, but right of entry has been obtained, the occupants of all lands and improvements have vacated, and KYTC has physical possession and right to remove, salvage, or demolish all improvements. Fair market value has been paid or deposited with the court for most parcels. Fair market value for all pending parcels will be paid or deposited with the court prior to AWARD of construction contract. (See note 1 below.)

Note 1: The KYTC shall re-submit a right-of-way certification form for this project prior to AWARD of all Federal-Aid construction contracts. Award must not to be made until after KYTC has obtained full legal possession and fair market value for all parcels has been paid or deposited with the court and FHWA has concurred in the re-submitted right-of-way certification.

Right-of-Way Certification Form

Revised 2/22/11

☐ **Condition 3.** The acquisition or right of occupancy and use of a few remaining parcels are not complete and/or some parcels still have occupants. However, all remaining occupants have had replacement housing made available to them in accordance with 49 CFR 24.204. The KYTC is hereby requesting authorization to advertise this project for bids and to proceed with bid letting even though the necessary rights-of-way will not be fully acquired, and/or some occupants will not be relocated, and/or the fair market value will not be paid or deposited with the court for some parcels until after bid letting. KYTC will fully meet all the requirements outlined in 23 CFR 635.309(c)(3) and 49 CFR 24.102(j) and will expedite completion of all acquisitions, relocations, and full payments after bid letting and prior to AWARD of the construction contract or force account construction. A full explanation and reason for this request, including identification of each such parcel and dates on which acquisitions, payments, and relocations will be completed, is attached to this certification form for FHWA concurrence. (See note 2.)

Note 2: The KYTC may request authorization on this basis only in unique and unusual circumstances. Proceeding to bid letting shall be the exception and never become the rule. In all cases, the KYTC shall make extraordinary efforts to expedite completion of the acquisition, payment for all affected parcels, and the relocation of all relocatees prior to AWARD of all Federal-Aid construction contracts or force account construction.

Approved: Joe Tackett (Printed Name) _____ (Signature) Right-of-Way Supervisor

3/14/2013

Approved: DAVID L. ORR (Printed Name) _____ (Signature) KYTC, Director of ROW &Utilities

Approved: _____ (Printed Name) _____ (Signature) FHWA, ROW Officer (when applicable)

Right-of-Way Certification Form

Revised 2/22/11

Date: 2-25-2013

Project Name: New Guardrail KY 644
Project #: FD52 064 0644 000-002
Item #: 12-00938.00
Letting Date: 2-4-2013

County: Lawrence
Federal #: HSIP 9010 (097)

This project has 0 total number of parcels to be acquired, and 0 total number of individuals or families to be relocated, as well as 0 total number of businesses to be relocated.

0 Parcels where acquired by a signed fee simple deed and fair market value has been paid

0 Parcels have been acquired by IOJ through condemnation and fair market value has been deposited with the court

0 Parcels have not been acquired at this time (*explain below for each parcel*)

0 Parcels have been acquired or have a "right of entry" but fair market value has not been paid or has not been deposited with the court *(explain below for each parcel)*

0 Relocatees have not been relocated from parcels ____, ____, ____, ____, ____, ____, and ____ *(explain below for each parcel)*

Parcel #	Name/Station	Explanation for delayed acquisition, delayed relocation, or delayed payment of fair market value	Proposed date of payment or of relocation

There are 0 billboards and/or 0 cemeteries involved on this project.

There are 0 water or monitoring wells on parcels ____, ____, ____, ____, and ____. All have been acquired and are the responsibility of the project contractor to close/cap.

Form Effective Date: April 1, 2006
Last Revised: February 22, 2011

SPECIAL NOTES FOR UTILITY CLEARANCE

IMPACT ON CONSTRUCTION

JOHNSON COUNTY
HSIP 5235 (001)
KY 172
NEW GUARDRAIL HSIP

GENERAL PROJECT NOTE ON UTILITY PROTECTION
Utility coordination efforts determined that no significant utility relocation work is required to complete the project in this area. There are telephone, power and cable lines in the area which the contractor should use caution when working near.

NOTE: DO NOT DISTURB THE FOLLOWING UTILITIES LOCATED WITHIN THE PROJECT DISTURB LIMITS
N/A
The Contractor is fully responsible for protection of all utilities listed above

THE FOLLOWING COMPANIES ARE RELOCATING/ADJUSTING THEIR UTILITIES WITHIN THE PROJECT LIMITS AND WILL BE COMPLETE PRIOR TO CONSTRUCTION
N/A

THE FOLLOWING COMPANIES HAVE FACILITIES TO BE RELOCATED/ADJUSTED BY THE COMPANY OR THE COMPANY'S SUBCONTRACTOR AND IS TO BE COORDINATED WITH THE ROAD CONTRACT
N/A.

THE FOLLOWING COMPANIES HAVE FACILITIES TO BE RELOCATED/ADJUSTED BY THE ROAD CONTRACTOR AS INCLUDED IN THIS CONTRACT
N/A

SPECIAL NOTES FOR UTILITY CLEARANCE

IMPACT ON CONSTRUCTION

JOHNSON COUNTY
HSIP 5235 (001)
KY 172
NEW GUARDRAIL HSIP

SPECIAL CAUTION NOTE – PROTECTION OF UTILITIES

The contractor will be responsible for contacting all utility facility owners on the subject project to coordinate his activities. The contractor will coordinate his activities to minimize and, where possible, avoid conflicts with utility facilities. Due to the nature of the work proposed, it is unlikely to conflict with the existing utilities beyond minor facility adjustments. Where conflicts with utility facilities are unavoidable, the contractor will coordinate any necessary relocation work with the facility owner and Resident Engineer. The Kentucky Transportation Cabinet maintains the right to remove or alter portions of this contract if a utility conflict occurs.

The utility facilities as noted in the previous section(s) have been determined using data garnered by varied means and with varying degrees of accuracy: from the facility owners, a result of S.U.E., field inspections, and/or reviews of record drawings. The facilities defined may not be inclusive of all utilities in the project scope and are not Level A quality, unless specified as such. It is the contractor's responsibility to verify all utilities and their respective locations before excavating.

BEFORE YOU DIG

The contractor is instructed to call 1-800-752-6007 to reach KY 811, the one-call system for information on the location of existing underground utilities. The call is to be placed a minimum of two (2) and no more than ten (10) business days prior to excavation. The contractor should be aware that owners of underground facilities are not required to be members of the KY 811 one-

SPECIAL NOTES FOR UTILITY CLEARANCE

IMPACT ON CONSTRUCTION

JOHNSON COUNTY
HSIP 5235 (001)
KY 172
NEW GUARDRAIL HSIP

call Before-U-Dig (BUD) service. The contractor must coordinate excavation with the utility owners, including those whom do not subscribe to KY 811. It may be necessary for the contractor to contact the County Court Clerk to determine what utility companies have facilities in the area.

Please Note: The information presented in this Utility Note is informational in nature and the information contained herein is not guaranteed.

AREA UTILITIES CONTACT LIST

Utility Company/Agency	Contact Name	Contact Information

SPECIAL NOTES FOR UTILITY CLEARANCE

IMPACT ON CONSTRUCTION

LAWRENCE COUNTY
HSIP 9010 (097)
KY 644
NEW GUARDRAIL HSIP

GENERAL PROJECT NOTE ON UTILITY PROTECTION
Insert general notes as below for projects where no utility impact expected
Utility coordination efforts determined that no significant utility relocation work is required to complete the project. Columbia gas Transmission has a line in the vicinity of Mile Point 1.1. Contractor required to call KY 811 before doing any work in this area.,

NOTE: DO NOT DISTURB THE FOLLOWING UTILITIES LOCATED WITHIN THE PROJECT DISTURB LIMITS
N/A
The Contractor is fully responsible for protection of all utilities listed above

THE FOLLOWING COMPANIES ARE RELOCATING/ADJUSTING THEIR UTILITIES WITHIN THE PROJECT LIMITS AND WILL BE COMPLETE PRIOR TO CONSTRUCTION
N/A

THE FOLLOWING COMPANIES HAVE FACILITIES TO BE RELOCATED/ADJUSTED BY THE COMPANY OR THE COMPANY'S SUBCONTRACTOR AND IS TO BE COORDINATED WITH THE ROAD CONTRACT
N/A.

THE FOLLOWING COMPANIES HAVE FACILITIES TO BE RELOCATED/ADJUSTED BY THE ROAD CONTRACTOR AS INCLUDED IN THIS CONTRACT
N/A

SPECIAL NOTES FOR UTILITY CLEARANCE

IMPACT ON CONSTRUCTION

LAWRENCE COUNTY
HSIP 9010 (097)
KY 644
NEW GUARDRAIL HSIP

SPECIAL CAUTION NOTE – PROTECTION OF UTILITIES

The contractor will be responsible for contacting all utility facility owners on the subject project to coordinate his activities. The contractor will coordinate his activities to minimize and, where possible, avoid conflicts with utility facilities. Due to the nature of the work proposed, it is unlikely to conflict with the existing utilities beyond minor facility adjustments. Where conflicts with utility facilities are unavoidable, the contractor will coordinate any necessary relocation work with the facility owner and Resident Engineer. The Kentucky Transportation Cabinet maintains the right to remove or alter portions of this contract if a utility conflict occurs.

The utility facilities as noted in the previous section(s) have been determined using data garnered by varied means and with varying degrees of accuracy: from the facility owners, a result of S.U.E., field inspections, and/or reviews of record drawings. The facilities defined may not be inclusive of all utilities in the project scope and are not Level A quality, unless specified as such. It is the contractor's responsibility to verify all utilities and their respective locations before excavating.

BEFORE YOU DIG

The contractor is instructed to call 1-800-752-6007 to reach KY 811, the one-call system for information on the location of existing underground utilities. The call is to be placed a minimum of two (2) and no more than ten (10) business days prior to excavation. The contractor should be aware that owners of underground facilities are not required to be members of the KY 811 one-call Before-U-Dig (BUD) service. The contractor must coordinate excavation with the utility

SPECIAL NOTES FOR UTILITY CLEARANCE

IMPACT ON CONSTRUCTION

LAWRENCE COUNTY
HSIP 9010 (097)
KY 644
NEW GUARDRAIL HSIP

owners, including those whom do not subscribe to KY 811. It may be necessary for the contractor to contact the County Court Clerk to determine what utility companies have facilities in the area.

Please Note: The information presented in this Utility Note is informational in nature and the information contained herein is not guaranteed.

AREA UTILITIES CONTACT LIST

Utility Company/Agency	Contact Name	Contact Information

Department of Highways

JOHNSON

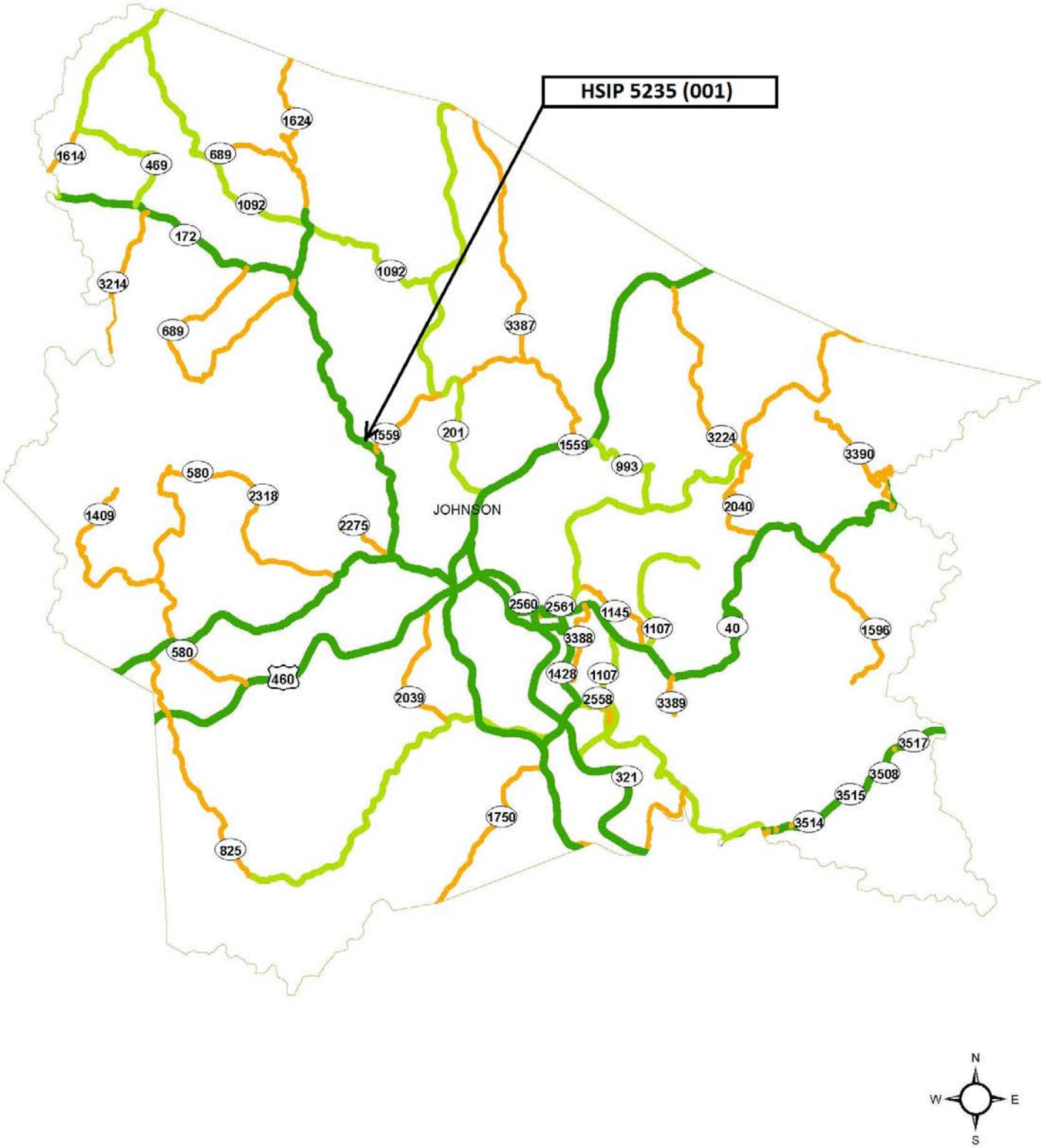

Department of Highways

LAWRENCE

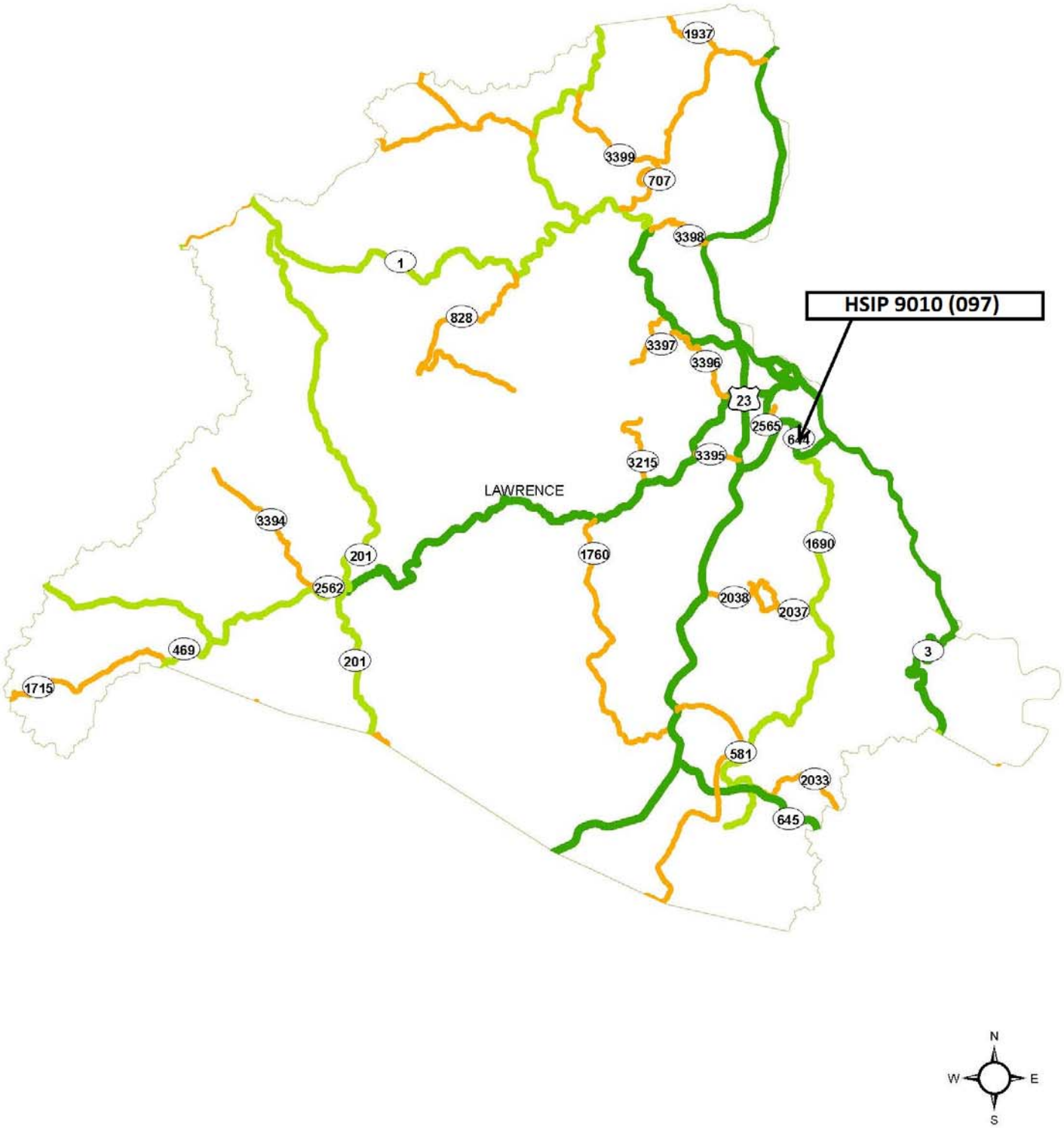

MATERIAL SUMMARY

CONTRACT ID: 132223 **121GR13P081-HSIP** **MP05801721302**

WEST LIBERTY-PAINTSVILLE ROAD (KY 172) FROM 0.331 MILES EAST OF STONECOAL ROAD EXTENDING EAST TO 265 FEET WEST OF KY 1559 GUARDRAIL, A DISTANCE OF .41 MILES.

Project Line No	Bid Code	DESCRIPTION	Quantity	Unit
0010	00001	DGA BASE	120.00	TON
0020	01987	DELINEATOR FOR GUARDRAIL BI DIRECTIONAL WHITE	46.00	EACH
0030	02351	GUARDRAIL-STEEL W BEAM-S FACE	2,275.00	LF
0040	02360	GUARDRAIL TERMINAL SECTION NO 1	4.00	EACH
0050	02371	GUARDRAIL END TREATMENT TYPE 7	2.00	EACH
0060	02399	EXTRA LENGTH GUARDRAIL POST	136.00	EACH
0070	02562	TEMPORARY SIGNS	150.00	SQFT
0080	02650	MAINTAIN & CONTROL TRAFFIC - (KY 172)	1.00	LS
0090	03236	CRIBBING	1,550.00	SQFT
0100	02569	DEMOBILIZATION	1.00	LS

CONTRACT ID: 132223 **121GR13P081-HSIP** **MP06406441301**

LOUISA-WALBRIDGE ROAD (KY 644) FROM 0.237 MILES EAST OF BEECH GROVE LANE EXTENDING EAST TO 0.272 MILES WEST OF WALBRIDGE ROAD GUARDRAIL, A DISTANCE OF .38 MILES.

Project Line No	Bid Code	DESCRIPTION	Quantity	Unit
0010	00001	DGA BASE	100.00	TON
0020	01987	DELINEATOR FOR GUARDRAIL BI DIRECTIONAL WHITE	42.00	EACH
0030	02351	GUARDRAIL-STEEL W BEAM-S FACE	2,075.00	LF
0040	02360	GUARDRAIL TERMINAL SECTION NO 1	3.00	EACH
0050	02371	GUARDRAIL END TREATMENT TYPE 7	3.00	EACH
0060	02373	GUARDRAIL END TREATMENT TYPE 3	4.00	EACH
0070	02399	EXTRA LENGTH GUARDRAIL POST	136.00	EACH
0080	02562	TEMPORARY SIGNS	150.00	SQFT
0090	02650	MAINTAIN & CONTROL TRAFFIC - (KY 644)	1.00	LS
0100	03236	CRIBBING	1,650.00	SQFT
0110	02569	DEMOBILIZATION	1.00	LS

GUARDRAIL SUMMARY

HSIP 5235 (001)
KY 172
MP 9.490-9.900

NEW GUARDRAIL							REMOVE GUARDRAIL				
LANE	END TREAT.	BEGIN MILEPOINT	END MILEPOINT	END TREAT.	LIN FEET	REMARKS	LANE	BEGIN MILEPOINT	END MILEPOINT	LIN FEET	REMARKS
Rt.	Term. Section 1	9.490	9.706	Type 7	1100.0						
Rt.	Term. Section 1	9.706	9.900	Type 7	975.0						
Lt.	Term. Section 1	9.878	9.892	Term. Section 1	100.0						
					100.0	Extra due to Power Poles					
				Total	2275.0						

Due to shoulder conditions, steel posts only should be used.

Due to shoulder conditions, 9' posts will be placed and cribbed in locations determined by the project engineer. See drawing in proposal. It will be assumed 2' average depth wedge in these locations.

Estimated DGA Wedge = 120 tons

Estimated Cribbing - 1550 sf

Estimated 9' posts = 136 Each

GUARDRAIL SUMMARY

HSIP 9010 (097)
KY 644
MP 0.933 - 1.313

NEW GUARDRAIL							REMOVE GUARDRAIL				
LANE	END TREAT.	BEGIN MILEPOINT	END MILEPOINT	END TREAT.	LIN FEET	REMARKS	LANE	BEGIN MILEPOINT	END MILEPOINT	LIN FEET	REMARKS
Lt.	Type 7	0.933	1.100	Type 7	800.0						
Rt.	Type 3	1.047	1.099	Type 3	300.0						
Lt.	Type 7	1.185	1.242	Term. Section 1	250.0						
Rt.	Term. Section 1	1.242	1.307	Type 3	350.0						
Lt.	Term. Section 1	1.246	1.313	Type 3	375.0						
				Total	2075.0						

Due to shoulder conditions, steel posts only should be used.

Due to shoulder conditions, 9' posts will be placed and cribbed in locations determined by the project engineer. See drawing in proposal. It will be assumed 2' average depth wedge in these locations.

Estimated DGA Wedge = 100 tons

Estimated Cribbing - 1650 sf

Estimated 9' posts = 136 Each

CRIBBING

Cribbing guardrail shall be picked up from the County Maintenance Facility and used for cribbing to stabilize the unpaved shoulder. Holes shall be drilled into new guardrail posts in order to bolt cribbing. The bid item "CRIBBING" shall pay for pick up, delivery, placement, and attachment of the cribbing guardrail to the new guardrail posts as well as any excavation required to place the cribbing.

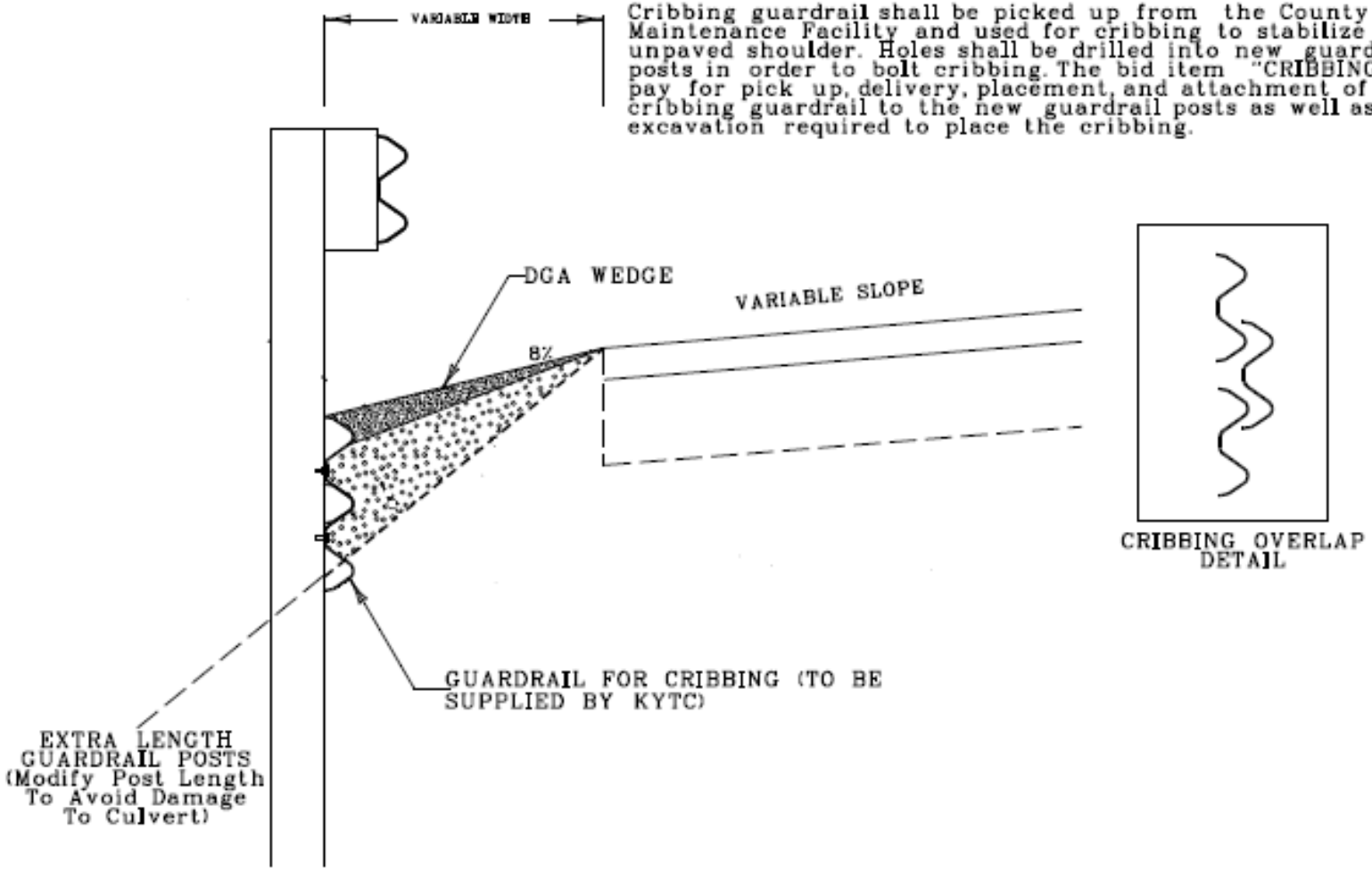

PART II

SPECIFICATIONS AND STANDARD DRAWINGS

SPECIFICATIONS REFERENCE

Any reference in the plans or proposal to previous editions of the *Standard Specifications for Road and Bridge Construction* and *Standard Drawings* are superseded by *Standard Specifications for Road and Bridge Construction, Edition of 2012* and *Standard Drawings, Edition of 2012 with the 2012 Revision.*

Supplemental Specifications to the
Standard Specifications for Road and Bridge Construction, 2012 Edition
Effective with the April 19, 2013 Letting

Subsection: **Revision:**	109.07.02 Fuel. Revise item Crushed Aggregate Used for Embankment Stabilization to the following: Crushed Aggregate Used for Stabilization of Unsuitable Materials Used for Embankment Stabilization
Subsection: **Revision:**	112.03.12 Project Traffic Coordinator (PTC). Replace the last paragraph of this subsection with the following: Ensure the designated PTC has sufficient skill and experience to properly perform the task assigned and has successfully completed the qualification courses.
Subsection: **Revision:**	112.04.18 Diversions (By-Pass Detours). Insert the following sentence after the 2nd sentence of this subsection. The Department will not measure temporary drainage structures needed for the diversion for payment. These items are incidental to this item of work.
Subsection: **Revision:**	206.04.01 Embankment-in-Place. Replace the fourth paragraph with the following: The Department will not measure **suitable** excavation included in the original plans that is disposed of for payment and will consider it incidental to Embankment-in-Place.
Subsection: **Revision:**	208.02.01 Cement. Replace paragraph with the following: Select Type I or Type II cement conforming to Section 801. Use the same type cement throughout the work.
Subsection: **Revision:**	208.03.06 Curing and Protection. Replace the fourth paragraph with the following: Do not allow traffic or equipment on the finished surface until the stabilized subgrade has cured for a total of 7-days with an ambient air temperature above 40 degrees Fahrenheit. A curing day consists of a continuous 24-hour period in which the ambient air temperature does not fall below 40 degrees Fahrenheit. Curing days will not be calculated consecutively, but must total seven (7) , 24-hour days with the ambient air temperature remaining at or above 40 degrees Fahrenheit before traffic or equipment will be allowed to traverse the stabilized subgrade. The Department may allow a shortened curing period when the Contractor requests. The Contractor shall give the Department at least 3 day notice of the request for a shortened curing period. The Department will require a minimum of 3 curing days after final compaction. The Contractor shall furnish cores to the treated depth of the roadbed at 500 feet intervals for each lane when a shortened curing time is requested. The Department will test cores using an unconfined compression test. Roadbed cores must achieve a minimum strength requirement of 80 psi.
Subsection: **Revision:**	208.03.06 Curing and Protection. Replace paragraph nine with the following: At no expense to the Department, repair any damage to the subgrade caused by freezing.

Supplemental Specifications to the
Standard Specifications for Road and Bridge Construction, 2012 Edition
Effective with the April 19, 2013 Letting

Subsection: **Revision:**	213.03.02 Progress Requirements. Replace the last sentence of the third paragraph with the following: Additionally, the Department will apply a penalty equal to the liquidated damages when all aspects of the work are not coordinated in an acceptable manner within 7 calendar days after written notification.
Subsection: **Part:** **Number:** **Revision:**	402.03.02 Contractor Quality Control and Department Acceptance. D) Testing Responsibilities. 4) Density. Replace the second sentence of the Option A paragraph with the following: Perform coring by the end of the following work day.
Subsection: **Revision:**	403.02.10 Material Transfer Vehicle (MTV). Replace the first sentence with the following: In addition to the equipment specified above, provide a MTV with the following minimum characteristics:
Subsection: **Revision:**	412.02.09 Material Transfer Vehicle (MTV). Replace the paragraph with the following: Provide and utilize a MTV with the minimum characteristics outlined in section 403.02.10.
Subsection: **Revision:**	412.03.07 Placement and Compaction. Replace the first paragraph with the following: Use a MTV when placing SMA mixture in the driving lanes. The MTV is not required on ramps and/or shoulders unless specified in the contract. When the Engineer determines the use of the MTV is not practical for a portion of the project, the Engineer may waive its requirement for that portion of pavement by a letter documenting the waiver.
Subsection: **Revision:**	412.04 MEASUREMENT. Add the following subsection: 412.04.03. Material Transfer Vehicle (MTV). The Department will not measure the MTV for payment and will consider its use incidental to the asphalt mixture.
Subsection: **Part:** **Revision:**	501.03.19 Surface Tolerances and Testing Surface. B) Ride Quality. Add the following to the end of the first paragraph: The Department will specify if the ride quality requirements are Category A or Category B when ride quality is specified in the Contract. Category B ride quality requirements shall apply when the Department fails to classify which ride quality requirement will apply to the Contract.
Subsection: **Revision:**	605.03.04 Tack Welding. Insert the subsection and the following: 605.03.04 Tack Welding. The Department does not allow tack welding.
Subsection: **Part:** **Number:** **Revision:**	606.03.17 Special Requirements for Latex Concrete Overlays. A) Existing Bridges and New Structures. 1) Prewetting and Grout-Bond Coat. Add the following sentence to the last paragraph: Do not apply a grout-bond coat on bridge decks prepared by hydrodemolition.

Supplemental Specifications to the
Standard Specifications for Road and Bridge Construction, 2012 Edition
Effective with the April 19, 2013 Letting

Subsection: **Revision:**	609.03 Construction. Replace Subsection 609.03.01 with the following: 609.03.01 A) Swinging the Spans. Before placing concrete slabs on steel spans or precast concrete release the temporary erection supports under the bridge and swing the span free on its supports. 609.03.01 B) Lift Loops. Cut all lift loops flush with the top of the precast beam once the beam is placed in the final location and prior to placing steel reinforcement. At locations where lift loops are cut, paint the top of the beam with galvanized or epoxy paint.
Subsection: **Revision:**	611.03.02 Precast Unit Construction. Replace the first sentence of the subsection with the following: Construct units according to ASTM C1577, **replacing Table 1 (Design Requirements for Precast Concrete Box Sections Under Earth, Dead and HL-93 Live Load Conditions) with KY Table 1 (Precast Culvert KYHL-93 Design Table)**, and Section 605 with the following exceptions and additions:
Subsection: **Number:** **Revision:**	613.03.01 Design. 2) Replace "AASHTO Standard Specifications for Highway Bridges" with "AASHTO LRFD Bridge Design Specifications"
Subsection: **Revision:**	615.06.02 Add the following sentence to the end of the subsection. The ends of units shall be normal to walls and centerline except exposed edges shall be beveled ¾ inch.
Subsection: **Revision:**	615.06.03 Placement of Reinforcement in Precast 3-Sided Units. Replace the reference of 6.6 in the section to 615.06.06.
Subsection: **Revision:**	615.06.04 Placement of Reinforcement for Precast Endwalls. Replace the reference of 6.7 in the section to 615.06.07.
Subsection: **Revision:**	615.06.06 Laps, Welds, and Spacing for Precast 3-Sided Units. Replace the subsection with the following: Tension splices in the circumferential reinforcement shall be made by lapping. Laps may not be tack welded together for assembly purposes. For smooth welded wire fabric, the overlap shall meet the requirements of AASHTO 2012 Bridge Design Guide Section 5.11.2.5.2 and AASHTO 2012 Bridge Design Guide Section 5.11.6.3. For deformed welded wire fabric, the overlap shall meet the requirements of AASHTO 2012 Bridge Design Guide Section 5.11.2.5.1 and AASHTO 2012 Bridge Design Guide Section 5.11.6.2. The overlap of welded wire fabric shall be measured between the outer most longitudinal wires of each fabric sheet. For deformed billet-steel bars, the overlap shall meet the requirements of AASHTO 2012 Bridge Design Guide Section 5.11.2.1. For splices other than tension splices, the overlap shall be a minimum of 12" for welded wire fabric or deformed billet-steel bars. The spacing center to center of the circumferential wires in a wire fabric sheet shall be no less than 2 inches and no more than 4 inches. The spacing center to center of the longitudinal wires shall not be more than 8 inches. The spacing center to center of the longitudinal distribution steel for either line of reinforcing in the top slab shall be not more than 16 inches.

Supplemental Specifications to the
Standard Specifications for Road and Bridge Construction, 2012 Edition
Effective with the April 19, 2013 Letting

Subsection: **Revision:**	615.06.07 Laps, Welds, and Spacing for Precast Endwalls. Replace the subsection with the following: Splices in the reinforcement shall be made by lapping. Laps may not be tack welded together for assembly purposes. For smooth welded wire fabric, the overlap shall meet the requirements of AASHTO 2012 Bridge Design Guide Section 5.11.2.5.2 and AASHTO 2012 Bridge Design Guide Section 5.11.6.3. For deformed welded wire fabric, the overlap shall meet the requirements of AASHTO 2012 Bridge Design Guide Section 5.11.2.5.1 and AASHTO 2012 Bridge Design Guide Section 5.11.6.2. For deformed billet-steel bars, the overlap shall meet the requirements of AASHTO 2012 Bridge Design Guide Section 5.11.2.1. The spacing center-to-center of the wire fabric sheet shall not be less than 2 inches or more than 8 inches.
Subsection: **Revision:**	615.08.01 Type of Test Specimen. Replace the subsection with the following: Start-up slump, air content, unit weight, and temperature tests will be performed each day on the first batch of concrete. Acceptable start-up results are required for production of the first unit. After the first unit has been established, random acceptance testing is performed daily for each 50 yd^3 (or fraction thereof). In addition to the slump, air content, unit weight, and temperature tests, a minimum of one set of cylinders shall be required each time plastic property testing is performed.
Subsection: **Revision:**	615.08.02 Compression Testing. Delete the second sentence.
Subsection: **Revision:**	615.08.04 Acceptability of Core Tests. Delete the entire subsection.
Subsection: **Revision:**	615.12 Inspection. Add the following sentences to the end of the subsection: Units will arrive at jobsite with the "Kentucky Oval" stamped on the unit which is an indication of acceptable inspection at the production facility. Units shall be inspected upon arrival for any evidence of damage resulting from transport to the jobsite.

2012 STANDARD DRAWINGS THAT APPLY

TYPICAL GUARDRAIL INSTALLATIONS RBI-001-10
TYPICAL GUARDRAIL INSTALLATIONS RBI-002-06
GUARDRAIL TERMINAL SECTIONS RBR-010-05
GUARDRAIL POSTS RBR-015-04
GUARDRAIL POSTS RBR-016-04
GUARDRAIL END TREATMENT TYPE 3 ..... RBR-030-04
GUARDRAIL END TREATMENT TYPE 7 ..... RBR-050-06
MISCELLANEOUS STANDARDS PART 1 ..... RGX-001-05
LANE CLOSURE TWO-LANE HIGHWAY CASE I TTC-100-03
LANE CLOSURE TWO-LANE HIGHWAY CASE II TTC-105-02
SHOULDER CLOSURE TTC-135-01
POST SPLICING DETAIL TTD-110-01

COUNTY OF	ITEM NO.	SHEET NO.

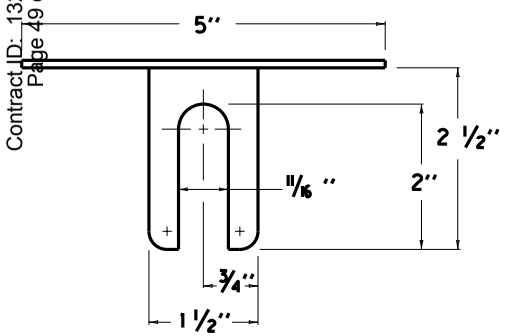

PLAN VIEW

NOTES

1. THE DELINEATOR'S SHAPE AND DIMENSIONS ARE SHOWN FOR ILLUSTRATION PURPOSES ONLY. TYPES OF DELINEATORS PERMITTED SHALL BE FROM THE LIST OF APPROVED MATERIALS.
2. DELINEATOR SHALL BE MEASURED AND PAID FOR AT THE CONTRACT UNIT PRICE EACH AND SHALL INCLUDE ALL MATERIALS AND LABOR NECESSARY FOR ONE COMPLETE INSTALLATION.
3.

CODE	PAY ITEM	PAY UNIT
1982	DELINEATOR FOR GUARDRAIL - MONO DIRECTIONAL WHITE	EACH
1983	DELINEATOR FOR GUARDRAIL - MONO DIRECTIONAL YELLOW	EACH
1987	DELINEATOR FOR GUARDRAIL - BI-DIRECTIONAL WHITE	EACH

4. GUARDRAIL DELINEATORS SHALL BE REQUIRED ON ALL GUARDRAIL.
5. DELINEATORS SHALL BE MANUFACTURED FROM 12 GA. GALVANIZED STEEL.
6. DIMENSIONS SHOWN ARE APPROXIMATE AND ARE SUBJECT TO MANUFACTURER'S TOLERANCES.
7. WHEN CONCRETE BARRIERS EXTEND ACROSS BRIDGE STRUCTURES IN LIEU OF STEEL BEAM GUARDRAIL, DELINEATORS SHALL BE INSTALLED AT SAME VERTICAL ALIGNMENT AS ON THE GUARDRAIL, AND DELINEATORS SHALL COMPLY WITH CURRENT SEPIA DRAWING 004.
8. DELINEATORS SHALL BE INSTALLED IN ACCORDANCE WITH MANUFACTURER'S RECOMMENDATIONS.

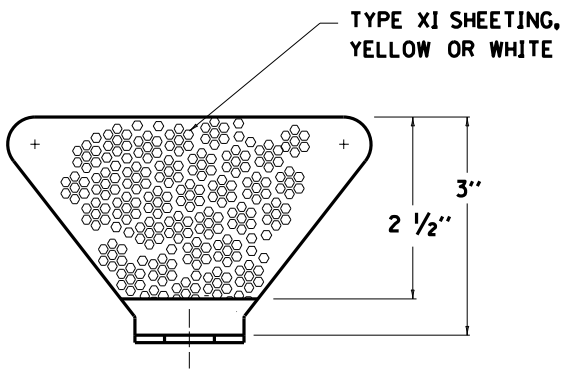

FRONT VIEW

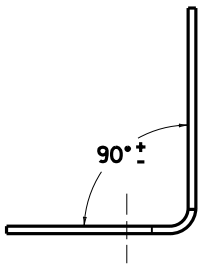

SIDE VIEW

NOTE: DIMENSIONS SHOWN ARE FOR ONE VERSION OF A WEB-MOUNTED GUARDRAIL DELINEATOR. DELINEATORS WITH ALTERNATE DIMENSIONS MAY BE CONSIDERED FOR INCLUSION ON THE APPROVED PRODUCTS LIST.

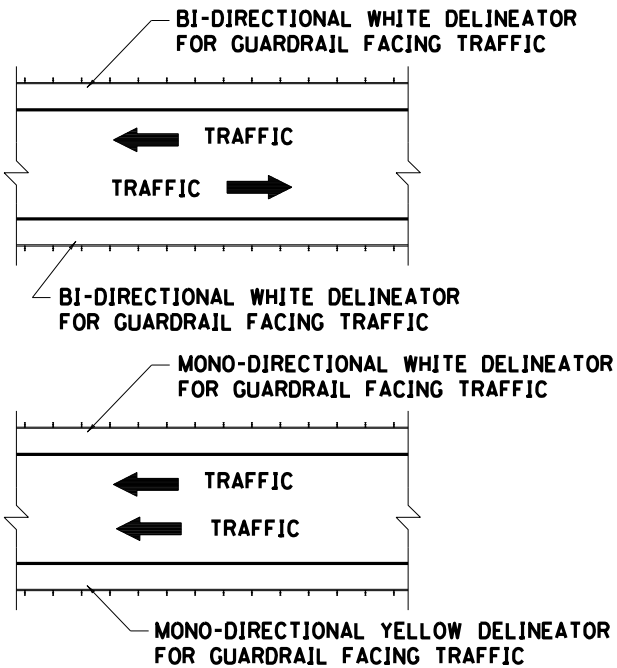

PLACEMENT OF DELINEATORS FOR GUARDRAIL

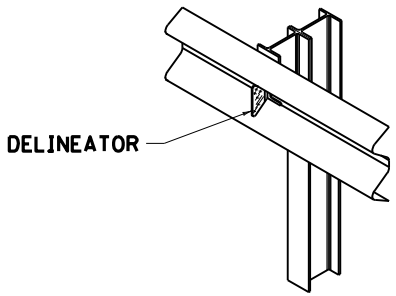

ISOMETRIC VIEW

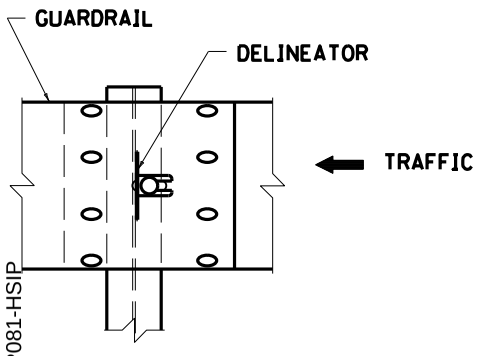

FRONT VIEW

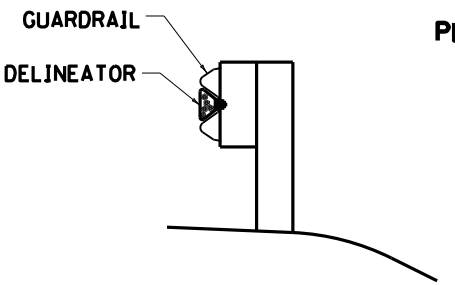

SIDE VIEW

APPROXIMATE DELINEATOR SPACING	
TANGENT	100'
CURVE	50'

SPACING SHOULD BE ADJUSTED IN CURVES SO THAT SEVERAL DELINEATORS ARE ALWAYS SIMULTANEOUSLY VISIBLE TO THE ROAD USER.

KENTUCKY
DEPARTMENT OF HIGHWAYS

DELINEATORS
FOR GUARDRAIL

SUBMITTED Jeff Vaught 6-15-2012
DIRECTOR DIVISION OF DESIGN DATE

002

COUNTY OF	ITEM NO.	SHEET NO.

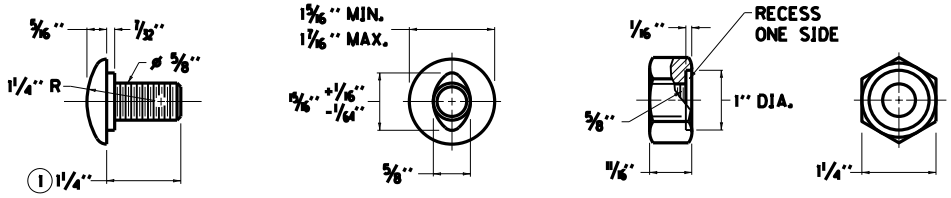

5/8" BUTTON HEAD BOLT AND RECESSED NUT

NOTES

1. RAIL BOLT SIMILAR EXCEPT LENGTH.
2. THE THRIE BEAM TO "W" BEAM CONNECTOR SHALL COMPLY WITH AASHTO M-180 CLASS A, TYPE 2 EXCEPT WHERE IN CONFLICT WITH THIS DETAIL.

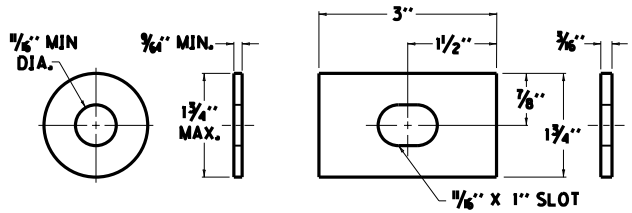

ROUND WASHER AND RECTANGULAR PLATE WASHER

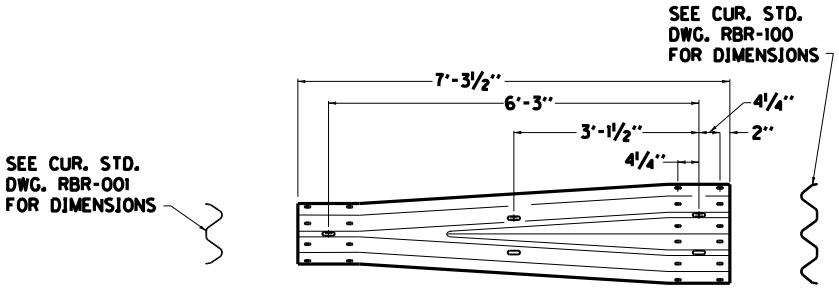

THRIE BEAM TO "W" BEAM CONNECTOR 2

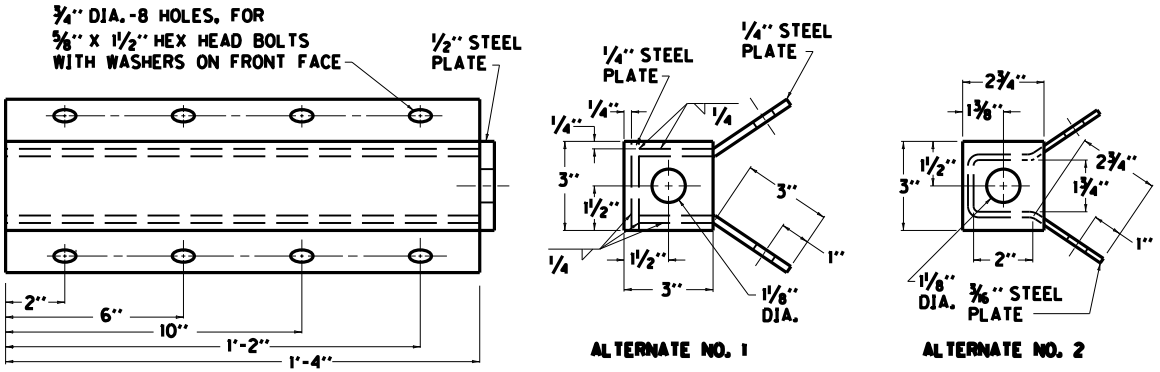

ALTERNATE NO. 1

ALTERNATE NO. 2

RAIL ANCHOR ASSEMBLY

KENTUCKY
DEPARTMENT OF HIGHWAYS

GUARDRAIL COMPONENTS

SUBMITTED TEBM DIVISION OF DESIGN 6-15-2012 DATE

008

COUNTY OF	ITEM NO.	SHEET NO.

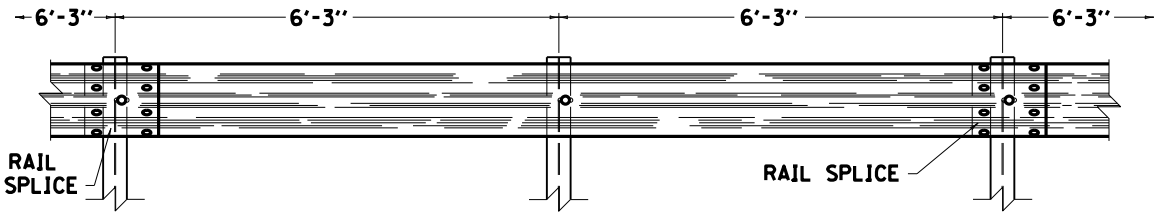

ELEVATION VIEW

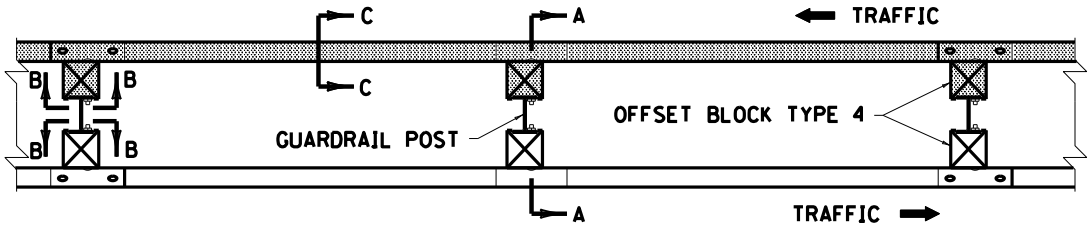

PLAN VIEW
(DOUBLE FACE RAIL OR SINGLE FACE RAIL)

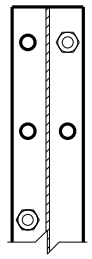

SECTION B-B

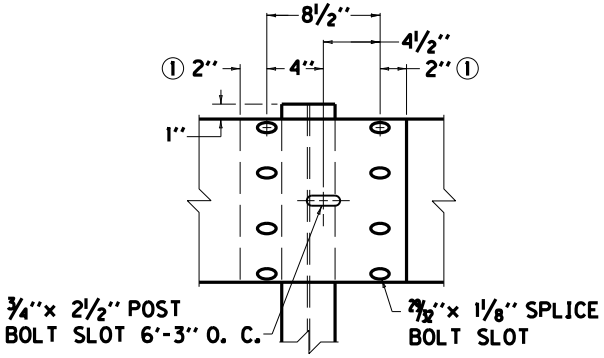

RAIL SPLICE ②

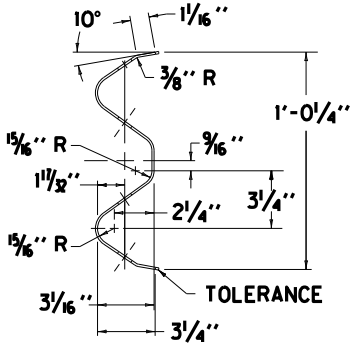

SECTION C-C
(RAIL CORRUGATED
SHEET STEEL BEAM)

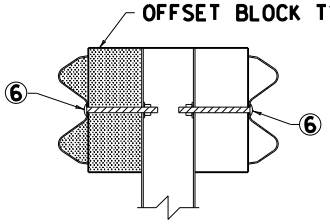

SECTION A-A
DOUBLE FACE RAIL WITH
STEEL POST (W6x9)
(TIMBER OFFSET BLOCK)

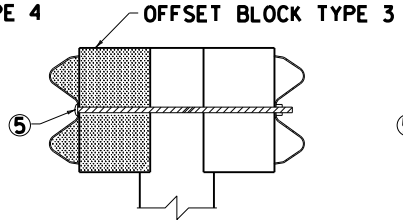

SECTION A-A
DOUBLE FACE RAIL WITH
ROUND TIMBER POST

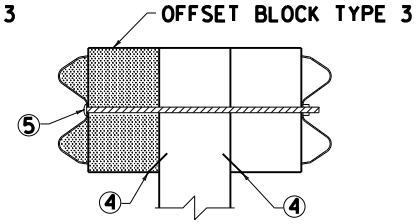

SECTION A-A
DOUBLE FACE RAIL WITH
TIMBER POST

NOTES

THE CONTRACT UNIT PRICE BID SHALL BE:
GUARDRAIL-STEEL W BEAM-SINGLE FACE - LIN. FT.
OR
GUARDRAIL-STEEL W BEAM-DOUBLE FACE - LIN. FT.

DIMENSIONAL TOLERANCES NOT SHOWN OR IMPLIED ARE INTENDED TO BE THOSE CONSISTENT WITH THE PROPER FUNCTIONING OF THE PART, INCLUDING ITS APPEARANCE AND ACCEPTED MANUFACTURING PRACTICES.

THE RAIL ELEMENT SHALL COMPLY WITH AASHTO M-180 -CLASS A, TYPE II.

ALL LAPS SHALL BE PLACED IN THE DIRECTION OF TRAFFIC FLOW.

① TOLERANCE + 1 1/4", -1/4"

② 8 -5/8" x 1 1/4" LONG BUTTON HEAD BOLTS AND HEX HEAD RECESS NUTS REQUIRED FOR EACH RAIL SPLICE.

③ LENGTH EQUALS POST AND BLOCK WIDTH PLUS: 2" FOR BOLT OR 2 1/4" FOR THREADED ROD.

④ GALVANIZED STEEL 10d COMMON COATED NAIL (DRIVE NAIL AT THE TOP OR BOTTOM CENTER OF BLOCK AND POST AFTER BOLT IS INSTALLED).

⑤ 5/8" x ③ STEEL THREADED ROD AND TWO (2) HEX HEAD NUTS OR 5/8" x ③ BUTTON OR HEX HEAD BOLT AND HEX HEAD NUT.

⑥ 5/8" x 8" BUTTON HEAD BOLT, HEX HEAD RECESS NUT AND ONE 5/8" ROUND WASHER (TYP.). BOLT SHALL HAVE A MINIMUM THREAD LENGTH OF 2".

REQUIRED FOR DOUBLE RAIL

7 BOTH 12'-6" AND 25' LENGTHS OF "W" BEAM GUARDRAIL SECTIONS WILL BE PERMITTED UNLESS OTHERWISE DIRECTED BY THE ENGINEER.

KENTUCKY
DEPARTMENT OF HIGHWAYS

STEEL BEAM GUARDRAIL ("W" BEAM)

SUBMITTED _____ DIRECTOR DIVISION OF DESIGN 12-[illegible] DATE

LAWRENCE - JOHNSON COUNTIES
121GR13P081-HSIP

Contract ID: 132223
Page 56 of 78

FILE NAME: C:\PWWORK\JEFF.LAIL\D0512631\SEPIA 012.DGN
USER: Jeff.Lail
DATE PLOTTED: December 11, 2012
E-SHEET NAME:
MicroStation v8.11.7.180

PART III

EMPLOYMENT, WAGE AND RECORD REQUIREMENTS

FHWA-1273 -- Revised May 1, 2012

REQUIRED CONTRACT PROVISIONS
FEDERAL-AID CONSTRUCTION CONTRACTS

I. General
II. Nondiscrimination
III. Nonsegregated Facilities
IV. Davis-Bacon and Related Act Provisions
V. Contract Work Hours and Safety Standards Act Provisions
VI. Subletting or Assigning the Contract
VII. Safety: Accident Prevention
VIII. False Statements Concerning Highway Projects
IX. Implementation of Clean Air Act and Federal Water Pollution Control Act
X. Compliance with Governmentwide Suspension and Debarment Requirements
XI. Certification Regarding Use of Contract Funds for Lobbying

ATTACHMENTS

A. Employment and Materials Preference for Appalachian Development Highway System or Appalachian Local Access Road Contracts (included in Appalachian contracts only)

I. GENERAL

1. Form FHWA-1273 must be physically incorporated in each construction contract funded under Title 23 (excluding emergency contracts solely intended for debris removal). The contractor (or subcontractor) must insert this form in each subcontract and further require its inclusion in all lower tier subcontracts (excluding purchase orders, rental agreements and other agreements for supplies or services).

The applicable requirements of Form FHWA-1273 are incorporated by reference for work done under any purchase order, rental agreement or agreement for other services. The prime contractor shall be responsible for compliance by any subcontractor, lower-tier subcontractor or service provider.

Form FHWA-1273 must be included in all Federal-aid design-build contracts, in all subcontracts and in lower tier subcontracts (excluding subcontracts for design services, purchase orders, rental agreements and other agreements for supplies or services). The design-builder shall be responsible for compliance by any subcontractor, lower-tier subcontractor or service provider.

Contracting agencies may reference Form FHWA-1273 in bid proposal or request for proposal documents, however, the Form FHWA-1273 must be physically incorporated (not referenced) in all contracts, subcontracts and lower-tier subcontracts (excluding purchase orders, rental agreements and other agreements for supplies or services related to a construction contract).

2. Subject to the applicability criteria noted in the following sections, these contract provisions shall apply to all work performed on the contract by the contractor's own organization and with the assistance of workers under the contractor's immediate superintendence and to all work performed on the contract by piecework, station work, or by subcontract.

3. A breach of any of the stipulations contained in these Required Contract Provisions may be sufficient grounds for withholding of progress payments, withholding of final payment, termination of the contract, suspension / debarment or any other action determined to be appropriate by the contracting agency and FHWA.

4. Selection of Labor: During the performance of this contract, the contractor shall not use convict labor for any purpose within the limits of a construction project on a Federal-aid highway unless it is labor performed by convicts who are on parole, supervised release, or probation. The term Federal-aid highway does not include roadways functionally classified as local roads or rural minor collectors.

II. NONDISCRIMINATION

The provisions of this section related to 23 CFR Part 230 are applicable to all Federal-aid construction contracts and to all related construction subcontracts of $10,000 or more. The provisions of 23 CFR Part 230 are not applicable to material supply, engineering, or architectural service contracts.

In addition, the contractor and all subcontractors must comply with the following policies: Executive Order 11246, 41 CFR 60, 29 CFR 1625-1627, Title 23 USC Section 140, the Rehabilitation Act of 1973, as amended (29 USC 794), Title VI of the Civil Rights Act of 1964, as amended, and related regulations including 49 CFR Parts 21, 26 and 27; and 23 CFR Parts 200, 230, and 633.

The contractor and all subcontractors must comply with: the requirements of the Equal Opportunity Clause in 41 CFR 60-1.4(b) and, for all construction contracts exceeding $10,000, the Standard Federal Equal Employment Opportunity Construction Contract Specifications in 41 CFR 60-4.3.

Note: The U.S. Department of Labor has exclusive authority to determine compliance with Executive Order 11246 and the policies of the Secretary of Labor including 41 CFR 60, and 29 CFR 1625-1627. The contracting agency and the FHWA have the authority and the responsibility to ensure compliance with Title 23 USC Section 140, the Rehabilitation Act of 1973, as amended (29 USC 794), and Title VI of the Civil Rights Act of 1964, as amended, and related regulations including 49 CFR Parts 21, 26 and 27; and 23 CFR Parts 200, 230, and 633.

The following provision is adopted from 23 CFR 230, Appendix A, with appropriate revisions to conform to the U.S. Department of Labor (US DOL) and FHWA requirements.

1. Equal Employment Opportunity: Equal employment opportunity (EEO) requirements not to discriminate and to take affirmative action to assure equal opportunity as set forth under laws, executive orders, rules, regulations (28 CFR 35, 29 CFR 1630, 29 CFR 1625-1627, 41 CFR 60 and 49 CFR 27) and orders of the Secretary of Labor as modified by the provisions prescribed herein, and imposed pursuant to 23 U.S.C. 140 shall constitute the EEO and specific affirmative action standards for the contractor's project activities under

this contract. The provisions of the Americans with Disabilities Act of 1990 (42 U.S.C. 12101 et seq.) set forth under 28 CFR 35 and 29 CFR 1630 are incorporated by reference in this contract. In the execution of this contract, the contractor agrees to comply with the following minimum specific requirement activities of EEO:

a. The contractor will work with the contracting agency and the Federal Government to ensure that it has made every good faith effort to provide equal opportunity with respect to all of its terms and conditions of employment and in their review of activities under the contract.

b. The contractor will accept as its operating policy the following statement:

"It is the policy of this Company to assure that applicants are employed, and that employees are treated during employment, without regard to their race, religion, sex, color, national origin, age or disability. Such action shall include: employment, upgrading, demotion, or transfer; recruitment or recruitment advertising; layoff or termination; rates of pay or other forms of compensation; and selection for training, including apprenticeship, pre-apprenticeship, and/or on-the-job training."

2. EEO Officer: The contractor will designate and make known to the contracting officers an EEO Officer who will have the responsibility for and must be capable of effectively administering and promoting an active EEO program and who must be assigned adequate authority and responsibility to do so.

3. Dissemination of Policy: All members of the contractor's staff who are authorized to hire, supervise, promote, and discharge employees, or who recommend such action, or who are substantially involved in such action, will be made fully cognizant of, and will implement, the contractor's EEO policy and contractual responsibilities to provide EEO in each grade and classification of employment. To ensure that the above agreement will be met, the following actions will be taken as a minimum:

a. Periodic meetings of supervisory and personnel office employees will be conducted before the start of work and then not less often than once every six months, at which time the contractor's EEO policy and its implementation will be reviewed and explained. The meetings will be conducted by the EEO Officer.

b. All new supervisory or personnel office employees will be given a thorough indoctrination by the EEO Officer, covering all major aspects of the contractor's EEO obligations within thirty days following their reporting for duty with the contractor.

c. All personnel who are engaged in direct recruitment for the project will be instructed by the EEO Officer in the contractor's procedures for locating and hiring minorities and women.

d. Notices and posters setting forth the contractor's EEO policy will be placed in areas readily accessible to employees, applicants for employment and potential employees.

e. The contractor's EEO policy and the procedures to implement such policy will be brought to the attention of employees by means of meetings, employee handbooks, or other appropriate means.

4. Recruitment: When advertising for employees, the contractor will include in all advertisements for employees the notation: "An Equal Opportunity Employer." All such advertisements will be placed in publications having a large circulation among minorities and women in the area from which the project work force would normally be derived.

a. The contractor will, unless precluded by a valid bargaining agreement, conduct systematic and direct recruitment through public and private employee referral sources likely to yield qualified minorities and women. To meet this requirement, the contractor will identify sources of potential minority group employees, and establish with such identified sources procedures whereby minority and women applicants may be referred to the contractor for employment consideration.

b. In the event the contractor has a valid bargaining agreement providing for exclusive hiring hall referrals, the contractor is expected to observe the provisions of that agreement to the extent that the system meets the contractor's compliance with EEO contract provisions. Where implementation of such an agreement has the effect of discriminating against minorities or women, or obligates the contractor to do the same, such implementation violates Federal nondiscrimination provisions.

c. The contractor will encourage its present employees to refer minorities and women as applicants for employment. Information and procedures with regard to referring such applicants will be discussed with employees.

5. Personnel Actions: Wages, working conditions, and employee benefits shall be established and administered, and personnel actions of every type, including hiring, upgrading, promotion, transfer, demotion, layoff, and termination, shall be taken without regard to race, color, religion, sex, national origin, age or disability. The following procedures shall be followed:

a. The contractor will conduct periodic inspections of project sites to insure that working conditions and employee facilities do not indicate discriminatory treatment of project site personnel.

b. The contractor will periodically evaluate the spread of wages paid within each classification to determine any evidence of discriminatory wage practices.

c. The contractor will periodically review selected personnel actions in depth to determine whether there is evidence of discrimination. Where evidence is found, the contractor will promptly take corrective action. If the review indicates that the discrimination may extend beyond the actions reviewed, such corrective action shall include all affected persons.

d. The contractor will promptly investigate all complaints of alleged discrimination made to the contractor in connection with its obligations under this contract, will attempt to resolve such complaints, and will take appropriate corrective action within a reasonable time. If the investigation indicates that the discrimination may affect persons other than the complainant, such corrective action shall include such other persons. Upon completion of each investigation, the contractor will inform every complainant of all of their avenues of appeal.

6. Training and Promotion:

a. The contractor will assist in locating, qualifying, and increasing the skills of minorities and women who are

applicants for employment or current employees. Such efforts should be aimed at developing full journey level status employees in the type of trade or job classification involved.

b. Consistent with the contractor's work force requirements and as permissible under Federal and State regulations, the contractor shall make full use of training programs, i.e., apprenticeship, and on-the-job training programs for the geographical area of contract performance. In the event a special provision for training is provided under this contract, this subparagraph will be superseded as indicated in the special provision. The contracting agency may reserve training positions for persons who receive welfare assistance in accordance with 23 U.S.C. 140(a).

c. The contractor will advise employees and applicants for employment of available training programs and entrance requirements for each.

d. The contractor will periodically review the training and promotion potential of employees who are minorities and women and will encourage eligible employees to apply for such training and promotion.

7. Unions: If the contractor relies in whole or in part upon unions as a source of employees, the contractor will use good faith efforts to obtain the cooperation of such unions to increase opportunities for minorities and women. Actions by the contractor, either directly or through a contractor's association acting as agent, will include the procedures set forth below:

a. The contractor will use good faith efforts to develop, in cooperation with the unions, joint training programs aimed toward qualifying more minorities and women for membership in the unions and increasing the skills of minorities and women so that they may qualify for higher paying employment.

b. The contractor will use good faith efforts to incorporate an EEO clause into each union agreement to the end that such union will be contractually bound to refer applicants without regard to their race, color, religion, sex, national origin, age or disability.

c. The contractor is to obtain information as to the referral practices and policies of the labor union except that to the extent such information is within the exclusive possession of the labor union and such labor union refuses to furnish such information to the contractor, the contractor shall so certify to the contracting agency and shall set forth what efforts have been made to obtain such information.

d. In the event the union is unable to provide the contractor with a reasonable flow of referrals within the time limit set forth in the collective bargaining agreement, the contractor will, through independent recruitment efforts, fill the employment vacancies without regard to race, color, religion, sex, national origin, age or disability; making full efforts to obtain qualified and/or qualifiable minorities and women. The failure of a union to provide sufficient referrals (even though it is obligated to provide exclusive referrals under the terms of a collective bargaining agreement) does not relieve the contractor from the requirements of this paragraph. In the event the union referral practice prevents the contractor from meeting the obligations pursuant to Executive Order 11246, as amended, and these special provisions, such contractor shall immediately notify the contracting agency.

8. Reasonable Accommodation for Applicants / Employees with Disabilities: The contractor must be familiar with the requirements for and comply with the Americans with Disabilities Act and all rules and regulations established there under. Employers must provide reasonable accommodation in all employment activities unless to do so would cause an undue hardship.

9. Selection of Subcontractors, Procurement of Materials and Leasing of Equipment: The contractor shall not discriminate on the grounds of race, color, religion, sex, national origin, age or disability in the selection and retention of subcontractors, including procurement of materials and leases of equipment. The contractor shall take all necessary and reasonable steps to ensure nondiscrimination in the administration of this contract.

a. The contractor shall notify all potential subcontractors and suppliers and lessors of their EEO obligations under this contract.

b. The contractor will use good faith efforts to ensure subcontractor compliance with their EEO obligations.

10. Assurance Required by 49 CFR 26.13(b):

a. The requirements of 49 CFR Part 26 and the State DOT's U.S. DOT-approved DBE program are incorporated by reference.

b. The contractor or subcontractor shall not discriminate on the basis of race, color, national origin, or sex in the performance of this contract. The contractor shall carry out applicable requirements of 49 CFR Part 26 in the award and administration of DOT-assisted contracts. Failure by the contractor to carry out these requirements is a material breach of this contract, which may result in the termination of this contract or such other remedy as the contracting agency deems appropriate.

11. Records and Reports: The contractor shall keep such records as necessary to document compliance with the EEO requirements. Such records shall be retained for a period of three years following the date of the final payment to the contractor for all contract work and shall be available at reasonable times and places for inspection by authorized representatives of the contracting agency and the FHWA.

a. The records kept by the contractor shall document the following:

(1) The number and work hours of minority and non-minority group members and women employed in each work classification on the project;

(2) The progress and efforts being made in cooperation with unions, when applicable, to increase employment opportunities for minorities and women; and

(3) The progress and efforts being made in locating, hiring, training, qualifying, and upgrading minorities and women;

b. The contractors and subcontractors will submit an annual report to the contracting agency each July for the duration of the project, indicating the number of minority, women, and non-minority group employees currently engaged in each work classification required by the contract work. This information is to be reported on Form FHWA-1391. The staffing data should represent the project work force on board in all or any part of the last payroll period preceding the end of July. If on-the-job training is being required by special provision, the contractor

will be required to collect and report training data. The employment data should reflect the work force on board during all or any part of the last payroll period preceding the end of July.

III. NONSEGREGATED FACILITIES

This provision is applicable to all Federal-aid construction contracts and to all related construction subcontracts of $10,000 or more.

The contractor must ensure that facilities provided for employees are provided in such a manner that segregation on the basis of race, color, religion, sex, or national origin cannot result. The contractor may neither require such segregated use by written or oral policies nor tolerate such use by employee custom. The contractor's obligation extends further to ensure that its employees are not assigned to perform their services at any location, under the contractor's control, where the facilities are segregated. The term "facilities" includes waiting rooms, work areas, restaurants and other eating areas, time clocks, restrooms, washrooms, locker rooms, and other storage or dressing areas, parking lots, drinking fountains, recreation or entertainment areas, transportation, and housing provided for employees. The contractor shall provide separate or single-user restrooms and necessary dressing or sleeping areas to assure privacy between sexes.

IV. DAVIS-BACON AND RELATED ACT PROVISIONS

This section is applicable to all Federal-aid construction projects exceeding $2,000 and to all related subcontracts and lower-tier subcontracts (regardless of subcontract size). The requirements apply to all projects located within the right-of-way of a roadway that is functionally classified as Federal-aid highway. This excludes roadways functionally classified as local roads or rural minor collectors, which are exempt. Contracting agencies may elect to apply these requirements to other projects.

The following provisions are from the U.S. Department of Labor regulations in 29 CFR 5.5 “Contract provisions and related matters” with minor revisions to conform to the FHWA-1273 format and FHWA program requirements.

1. Minimum wages

a. All laborers and mechanics employed or working upon the site of the work, will be paid unconditionally and not less often than once a week, and without subsequent deduction or rebate on any account (except such payroll deductions as are permitted by regulations issued by the Secretary of Labor under the Copeland Act (29 CFR part 3)), the full amount of wages and bona fide fringe benefits (or cash equivalents thereof) due at time of payment computed at rates not less than those contained in the wage determination of the Secretary of Labor which is attached hereto and made a part hereof, regardless of any contractual relationship which may be alleged to exist between the contractor and such laborers and mechanics.

Contributions made or costs reasonably anticipated for bona fide fringe benefits under section 1(b)(2) of the Davis-Bacon Act on behalf of laborers or mechanics are considered wages paid to such laborers or mechanics, subject to the provisions of paragraph 1.d. of this section; also, regular contributions made or costs incurred for more than a weekly period (but not less often than quarterly) under plans, funds, or programs which cover the particular weekly period, are deemed to be constructively made or incurred during such weekly period. Such laborers and mechanics shall be paid the appropriate wage rate and fringe benefits on the wage determination for the classification of work actually performed, without regard to skill, except as provided in 29 CFR 5.5(a)(4). Laborers or mechanics performing work in more than one classification may be compensated at the rate specified for each classification for the time actually worked therein: Provided, That the employer's payroll records accurately set forth the time spent in each classification in which work is performed. The wage determination (including any additional classification and wage rates conformed under paragraph 1.b. of this section) and the Davis-Bacon poster (WH–1321) shall be posted at all times by the contractor and its subcontractors at the site of the work in a prominent and accessible place where it can be easily seen by the workers.

b.(1) The contracting officer shall require that any class of laborers or mechanics, including helpers, which is not listed in the wage determination and which is to be employed under the contract shall be classified in conformance with the wage determination. The contracting officer shall approve an additional classification and wage rate and fringe benefits therefore only when the following criteria have been met:

(i) The work to be performed by the classification requested is not performed by a classification in the wage determination; and

(ii) The classification is utilized in the area by the construction industry; and

(iii) The proposed wage rate, including any bona fide fringe benefits, bears a reasonable relationship to the wage rates contained in the wage determination.

(2) If the contractor and the laborers and mechanics to be employed in the classification (if known), or their representatives, and the contracting officer agree on the classification and wage rate (including the amount designated for fringe benefits where appropriate), a report of the action taken shall be sent by the contracting officer to the Administrator of the Wage and Hour Division, Employment Standards Administration, U.S. Department of Labor, Washington, DC 20210. The Administrator, or an authorized representative, will approve, modify, or disapprove every additional classification action within 30 days of receipt and so advise the contracting officer or will notify the contracting officer within the 30-day period that additional time is necessary.

(3) In the event the contractor, the laborers or mechanics to be employed in the classification or their representatives, and the contracting officer do not agree on the proposed classification and wage rate (including the amount designated for fringe benefits, where appropriate), the contracting officer shall refer the questions, including the views of all interested parties and the recommendation of the contracting officer, to the Wage and Hour Administrator for determination. The Wage and Hour Administrator, or an authorized representative, will issue a determination within 30 days of receipt and so advise the contracting officer or

will notify the contracting officer within the 30-day period that additional time is necessary.

(4) The wage rate (including fringe benefits where appropriate) determined pursuant to paragraphs 1.b.(2) or 1.b.(3) of this section, shall be paid to all workers performing work in the classification under this contract from the first day on which work is performed in the classification.

c. Whenever the minimum wage rate prescribed in the contract for a class of laborers or mechanics includes a fringe benefit which is not expressed as an hourly rate, the contractor shall either pay the benefit as stated in the wage determination or shall pay another bona fide fringe benefit or an hourly cash equivalent thereof.

d. If the contractor does not make payments to a trustee or other third person, the contractor may consider as part of the wages of any laborer or mechanic the amount of any costs reasonably anticipated in providing bona fide fringe benefits under a plan or program, Provided, That the Secretary of Labor has found, upon the written request of the contractor, that the applicable standards of the Davis-Bacon Act have been met. The Secretary of Labor may require the contractor to set aside in a separate account assets for the meeting of obligations under the plan or program.

2. Withholding

The contracting agency shall upon its own action or upon written request of an authorized representative of the Department of Labor, withhold or cause to be withheld from the contractor under this contract, or any other Federal contract with the same prime contractor, or any other federally-assisted contract subject to Davis-Bacon prevailing wage requirements, which is held by the same prime contractor, so much of the accrued payments or advances as may be considered necessary to pay laborers and mechanics, including apprentices, trainees, and helpers, employed by the contractor or any subcontractor the full amount of wages required by the contract. In the event of failure to pay any laborer or mechanic, including any apprentice, trainee, or helper, employed or working on the site of the work, all or part of the wages required by the contract, the contracting agency may, after written notice to the contractor, take such action as may be necessary to cause the suspension of any further payment, advance, or guarantee of funds until such violations have ceased.

3. Payrolls and basic records

a. Payrolls and basic records relating thereto shall be maintained by the contractor during the course of the work and preserved for a period of three years thereafter for all laborers and mechanics working at the site of the work. Such records shall contain the name, address, and social security number of each such worker, his or her correct classification, hourly rates of wages paid (including rates of contributions or costs anticipated for bona fide fringe benefits or cash equivalents thereof of the types described in section 1(b)(2)(B) of the Davis-Bacon Act), daily and weekly number of hours worked, deductions made and actual wages paid. Whenever the Secretary of Labor has found under 29 CFR 5.5(a)(1)(iv) that the wages of any laborer or mechanic include the amount of any costs reasonably anticipated in providing benefits under a plan or program described in section 1(b)(2)(B) of the Davis-Bacon Act, the contractor shall maintain records which show that the commitment to provide such benefits is enforceable, that the plan or program is financially responsible, and that the plan or program has been communicated in writing to the laborers or mechanics affected, and records which show the costs anticipated or the actual cost incurred in providing such benefits. Contractors employing apprentices or trainees under approved programs shall maintain written evidence of the registration of apprenticeship programs and certification of trainee programs, the registration of the apprentices and trainees, and the ratios and wage rates prescribed in the applicable programs.

b.(1) The contractor shall submit weekly for each week in which any contract work is performed a copy of all payrolls to the contracting agency. The payrolls submitted shall set out accurately and completely all of the information required to be maintained under 29 CFR 5.5(a)(3)(i), except that full social security numbers and home addresses shall not be included on weekly transmittals. Instead the payrolls shall only need to include an individually identifying number for each employee (e.g. , the last four digits of the employee's social security number). The required weekly payroll information may be submitted in any form desired. Optional Form WH–347 is available for this purpose from the Wage and Hour Division Web site at http://www.dol.gov/esa/whd/forms/wh347instr.htm or its successor site. The prime contractor is responsible for the submission of copies of payrolls by all subcontractors. Contractors and subcontractors shall maintain the full social security number and current address of each covered worker, and shall provide them upon request to the contracting agency for transmission to the State DOT, the FHWA or the Wage and Hour Division of the Department of Labor for purposes of an investigation or audit of compliance with prevailing wage requirements. It is not a violation of this section for a prime contractor to require a subcontractor to provide addresses and social security numbers to the prime contractor for its own records, without weekly submission to the contracting agency..

(2) Each payroll submitted shall be accompanied by a “Statement of Compliance,” signed by the contractor or subcontractor or his or her agent who pays or supervises the payment of the persons employed under the contract and shall certify the following:

(i) That the payroll for the payroll period contains the information required to be provided under §5.5 (a)(3)(ii) of Regulations, 29 CFR part 5, the appropriate information is being maintained under §5.5 (a)(3)(i) of Regulations, 29 CFR part 5, and that such information is correct and complete;

(ii) That each laborer or mechanic (including each helper, apprentice, and trainee) employed on the contract during the payroll period has been paid the full weekly wages earned, without rebate, either directly or indirectly, and that no deductions have been made either directly or indirectly from the full wages earned, other than permissible deductions as set forth in Regulations, 29 CFR part 3;

(iii) That each laborer or mechanic has been paid not less than the applicable wage rates and fringe benefits or cash equivalents for the classification of work performed, as specified in the applicable wage determination incorporated into the contract.

(3) The weekly submission of a properly executed certification set forth on the reverse side of Optional Form WH–347 shall satisfy the requirement for submission of the "Statement of Compliance" required by paragraph 3.b.(2) of this section.

(4) The falsification of any of the above certifications may subject the contractor or subcontractor to civil or criminal prosecution under section 1001 of title 18 and section 231 of title 31 of the United States Code.

c. The contractor or subcontractor shall make the records required under paragraph 3.a. of this section available for inspection, copying, or transcription by authorized representatives of the contracting agency, the State DOT, the FHWA, or the Department of Labor, and shall permit such representatives to interview employees during working hours on the job. If the contractor or subcontractor fails to submit the required records or to make them available, the FHWA may, after written notice to the contractor, the contracting agency or the State DOT, take such action as may be necessary to cause the suspension of any further payment, advance, or guarantee of funds. Furthermore, failure to submit the required records upon request or to make such records available may be grounds for debarment action pursuant to 29 CFR 5.12.

4. Apprentices and trainees

a. Apprentices (programs of the USDOL).

Apprentices will be permitted to work at less than the predetermined rate for the work they performed when they are employed pursuant to and individually registered in a bona fide apprenticeship program registered with the U.S. Department of Labor, Employment and Training Administration, Office of Apprenticeship Training, Employer and Labor Services, or with a State Apprenticeship Agency recognized by the Office, or if a person is employed in his or her first 90 days of probationary employment as an apprentice in such an apprenticeship program, who is not individually registered in the program, but who has been certified by the Office of Apprenticeship Training, Employer and Labor Services or a State Apprenticeship Agency (where appropriate) to be eligible for probationary employment as an apprentice.

The allowable ratio of apprentices to journeymen on the job site in any craft classification shall not be greater than the ratio permitted to the contractor as to the entire work force under the registered program. Any worker listed on a payroll at an apprentice wage rate, who is not registered or otherwise employed as stated above, shall be paid not less than the applicable wage rate on the wage determination for the classification of work actually performed. In addition, any apprentice performing work on the job site in excess of the ratio permitted under the registered program shall be paid not less than the applicable wage rate on the wage determination for the work actually performed. Where a contractor is performing construction on a project in a locality other than that in which its program is registered, the ratios and wage rates (expressed in percentages of the journeyman's hourly rate) specified in the contractor's or subcontractor's registered program shall be observed.

Every apprentice must be paid at not less than the rate specified in the registered program for the apprentice's level of progress, expressed as a percentage of the journeymen hourly rate specified in the applicable wage determination. Apprentices shall be paid fringe benefits in accordance with the provisions of the apprenticeship program. If the apprenticeship program does not specify fringe benefits, apprentices must be paid the full amount of fringe benefits listed on the wage determination for the applicable classification. If the Administrator determines that a different practice prevails for the applicable apprentice classification, fringes shall be paid in accordance with that determination.

In the event the Office of Apprenticeship Training, Employer and Labor Services, or a State Apprenticeship Agency recognized by the Office, withdraws approval of an apprenticeship program, the contractor will no longer be permitted to utilize apprentices at less than the applicable predetermined rate for the work performed until an acceptable program is approved.

b. Trainees (programs of the USDOL).

Except as provided in 29 CFR 5.16, trainees will not be permitted to work at less than the predetermined rate for the work performed unless they are employed pursuant to and individually registered in a program which has received prior approval, evidenced by formal certification by the U.S. Department of Labor, Employment and Training Administration.

The ratio of trainees to journeymen on the job site shall not be greater than permitted under the plan approved by the Employment and Training Administration.

Every trainee must be paid at not less than the rate specified in the approved program for the trainee's level of progress, expressed as a percentage of the journeyman hourly rate specified in the applicable wage determination. Trainees shall be paid fringe benefits in accordance with the provisions of the trainee program. If the trainee program does not mention fringe benefits, trainees shall be paid the full amount of fringe benefits listed on the wage determination unless the Administrator of the Wage and Hour Division determines that there is an apprenticeship program associated with the corresponding journeyman wage rate on the wage determination which provides for less than full fringe benefits for apprentices. Any employee listed on the payroll at a trainee rate who is not registered and participating in a training plan approved by the Employment and Training Administration shall be paid not less than the applicable wage rate on the wage determination for the classification of work actually performed. In addition, any trainee performing work on the job site in excess of the ratio permitted under the registered program shall be paid not less than the applicable wage rate on the wage determination for the work actually performed.

In the event the Employment and Training Administration withdraws approval of a training program, the contractor will no longer be permitted to utilize trainees at less than the applicable predetermined rate for the work performed until an acceptable program is approved.

c. Equal employment opportunity. The utilization of apprentices, trainees and journeymen under this part shall be in conformity with the equal employment opportunity requirements of Executive Order 11246, as amended, and 29 CFR part 30.

d. Apprentices and Trainees (programs of the U.S. DOT).

Apprentices and trainees working under apprenticeship and skill training programs which have been certified by the Secretary of Transportation as promoting EEO in connection with Federal-aid highway construction programs are not subject to the requirements of paragraph 4 of this Section IV. The straight time hourly wage rates for apprentices and trainees under such programs will be established by the particular programs. The ratio of apprentices and trainees to journeymen shall not be greater than permitted by the terms of the particular program.

5. Compliance with Copeland Act requirements. The contractor shall comply with the requirements of 29 CFR part 3, which are incorporated by reference in this contract.

6. Subcontracts. The contractor or subcontractor shall insert Form FHWA-1273 in any subcontracts and also require the subcontractors to include Form FHWA-1273 in any lower tier subcontracts. The prime contractor shall be responsible for the compliance by any subcontractor or lower tier subcontractor with all the contract clauses in 29 CFR 5.5.

7. Contract termination: debarment. A breach of the contract clauses in 29 CFR 5.5 may be grounds for termination of the contract, and for debarment as a contractor and a subcontractor as provided in 29 CFR 5.12.

8. Compliance with Davis-Bacon and Related Act requirements. All rulings and interpretations of the Davis-Bacon and Related Acts contained in 29 CFR parts 1, 3, and 5 are herein incorporated by reference in this contract.

9. Disputes concerning labor standards. Disputes arising out of the labor standards provisions of this contract shall not be subject to the general disputes clause of this contract. Such disputes shall be resolved in accordance with the procedures of the Department of Labor set forth in 29 CFR parts 5, 6, and 7. Disputes within the meaning of this clause include disputes between the contractor (or any of its subcontractors) and the contracting agency, the U.S. Department of Labor, or the employees or their representatives.

10. Certification of eligibility.

a. By entering into this contract, the contractor certifies that neither it (nor he or she) nor any person or firm who has an interest in the contractor's firm is a person or firm ineligible to be awarded Government contracts by virtue of section 3(a) of the Davis-Bacon Act or 29 CFR 5.12(a)(1).

b. No part of this contract shall be subcontracted to any person or firm ineligible for award of a Government contract by virtue of section 3(a) of the Davis-Bacon Act or 29 CFR 5.12(a)(1).

c. The penalty for making false statements is prescribed in the U.S. Criminal Code, 18 U.S.C. 1001.

V. CONTRACT WORK HOURS AND SAFETY STANDARDS ACT

The following clauses apply to any Federal-aid construction contract in an amount in excess of $100,000 and subject to the overtime provisions of the Contract Work Hours and Safety Standards Act. These clauses shall be inserted in addition to the clauses required by 29 CFR 5.5(a) or 29 CFR 4.6. As used in this paragraph, the terms laborers and mechanics include watchmen and guards.

1. Overtime requirements. No contractor or subcontractor contracting for any part of the contract work which may require or involve the employment of laborers or mechanics shall require or permit any such laborer or mechanic in any workweek in which he or she is employed on such work to work in excess of forty hours in such workweek unless such laborer or mechanic receives compensation at a rate not less than one and one-half times the basic rate of pay for all hours worked in excess of forty hours in such workweek.

2. Violation; liability for unpaid wages; liquidated damages. In the event of any violation of the clause set forth in paragraph (1.) of this section, the contractor and any subcontractor responsible therefor shall be liable for the unpaid wages. In addition, such contractor and subcontractor shall be liable to the United States (in the case of work done under contract for the District of Columbia or a territory, to such District or to such territory), for liquidated damages. Such liquidated damages shall be computed with respect to each individual laborer or mechanic, including watchmen and guards, employed in violation of the clause set forth in paragraph (1.) of this section, in the sum of $10 for each calendar day on which such individual was required or permitted to work in excess of the standard workweek of forty hours without payment of the overtime wages required by the clause set forth in paragraph (1.) of this section.

3. Withholding for unpaid wages and liquidated damages. The FHWA or the contacting agency shall upon its own action or upon written request of an authorized representative of the Department of Labor withhold or cause to be withheld, from any moneys payable on account of work performed by the contractor or subcontractor under any such contract or any other Federal contract with the same prime contractor, or any other federally-assisted contract subject to the Contract Work Hours and Safety Standards Act, which is held by the same prime contractor, such sums as may be determined to be necessary to satisfy any liabilities of such contractor or subcontractor for unpaid wages and liquidated damages as provided in the clause set forth in paragraph (2.) of this section.

4. Subcontracts. The contractor or subcontractor shall insert in any subcontracts the clauses set forth in paragraph (1.) through (4.) of this section and also a clause requiring the subcontractors to include these clauses in any lower tier subcontracts. The prime contractor shall be responsible for compliance by any subcontractor or lower tier subcontractor with the clauses set forth in paragraphs (1.) through (4.) of this section.

VI. SUBLETTING OR ASSIGNING THE CONTRACT

This provision is applicable to all Federal-aid construction contracts on the National Highway System.

1. The contractor shall perform with its own organization contract work amounting to not less than 30 percent (or a greater percentage if specified elsewhere in the contract) of the total original contract price, excluding any specialty items designated by the contracting agency. Specialty items may be performed by subcontract and the amount of any such specialty items performed may be deducted from the total original contract price before computing the amount of work required to be performed by the contractor's own organization (23 CFR 635.116).

a. The term “perform work with its own organization” refers to workers employed or leased by the prime contractor, and equipment owned or rented by the prime contractor, with or without operators. Such term does not include employees or equipment of a subcontractor or lower tier subcontractor, agents of the prime contractor, or any other assignees. The term may include payments for the costs of hiring leased employees from an employee leasing firm meeting all relevant Federal and State regulatory requirements. Leased employees may only be included in this term if the prime contractor meets all of the following conditions:

(1) the prime contractor maintains control over the supervision of the day-to-day activities of the leased employees;
(2) the prime contractor remains responsible for the quality of the work of the leased employees;
(3) the prime contractor retains all power to accept or exclude individual employees from work on the project; and
(4) the prime contractor remains ultimately responsible for the payment of predetermined minimum wages, the submission of payrolls, statements of compliance and all other Federal regulatory requirements.

b. "Specialty Items" shall be construed to be limited to work that requires highly specialized knowledge, abilities, or equipment not ordinarily available in the type of contracting organizations qualified and expected to bid or propose on the contract as a whole and in general are to be limited to minor components of the overall contract.

2. The contract amount upon which the requirements set forth in paragraph (1) of Section VI is computed includes the cost of material and manufactured products which are to be purchased or produced by the contractor under the contract provisions.

3. The contractor shall furnish (a) a competent superintendent or supervisor who is employed by the firm, has full authority to direct performance of the work in accordance with the contract requirements, and is in charge of all construction operations (regardless of who performs the work) and (b) such other of its own organizational resources (supervision, management, and engineering services) as the contracting officer determines is necessary to assure the performance of the contract.

4. No portion of the contract shall be sublet, assigned or otherwise disposed of except with the written consent of the contracting officer, or authorized representative, and such consent when given shall not be construed to relieve the contractor of any responsibility for the fulfillment of the contract. Written consent will be given only after the contracting agency has assured that each subcontract is evidenced in writing and that it contains all pertinent provisions and requirements of the prime contract.

5. The 30% self-performance requirement of paragraph (1) is not applicable to design-build contracts; however, contracting agencies may establish their own self-performance requirements.

VII. SAFETY: ACCIDENT PREVENTION

This provision is applicable to all Federal-aid construction contracts and to all related subcontracts.

1. In the performance of this contract the contractor shall comply with all applicable Federal, State, and local laws governing safety, health, and sanitation (23 CFR 635). The contractor shall provide all safeguards, safety devices and protective equipment and take any other needed actions as it determines, or as the contracting officer may determine, to be reasonably necessary to protect the life and health of employees on the job and the safety of the public and to protect property in connection with the performance of the work covered by the contract.

2. It is a condition of this contract, and shall be made a condition of each subcontract, which the contractor enters into pursuant to this contract, that the contractor and any subcontractor shall not permit any employee, in performance of the contract, to work in surroundings or under conditions which are unsanitary, hazardous or dangerous to his/her health or safety, as determined under construction safety and health standards (29 CFR 1926) promulgated by the Secretary of Labor, in accordance with Section 107 of the Contract Work Hours and Safety Standards Act (40 U.S.C. 3704).

3. Pursuant to 29 CFR 1926.3, it is a condition of this contract that the Secretary of Labor or authorized representative thereof, shall have right of entry to any site of contract performance to inspect or investigate the matter of compliance with the construction safety and health standards and to carry out the duties of the Secretary under Section 107 of the Contract Work Hours and Safety Standards Act (40 U.S.C.3704).

VIII. FALSE STATEMENTS CONCERNING HIGHWAY PROJECTS

This provision is applicable to all Federal-aid construction contracts and to all related subcontracts.

In order to assure high quality and durable construction in conformity with approved plans and specifications and a high degree of reliability on statements and representations made by engineers, contractors, suppliers, and workers on Federal-aid highway projects, it is essential that all persons concerned with the project perform their functions as carefully, thoroughly, and honestly as possible. Willful falsification, distortion, or misrepresentation with respect to any facts related to the project is a violation of Federal law. To prevent any misunderstanding regarding the seriousness of these and similar acts, Form FHWA-1022 shall be posted on each Federal-aid highway project (23 CFR 635) in one or more places where it is readily available to all persons concerned with the project:

18 U.S.C. 1020 reads as follows:

"Whoever, being an officer, agent, or employee of the United States, or of any State or Territory, or whoever, whether a person, association, firm, or corporation, knowingly makes any false statement, false representation, or false report as to the character, quality, quantity, or cost of the material used or to be used, or the quantity or quality of the work performed or to be performed, or the cost thereof in connection with the submission of plans, maps, specifications, contracts, or costs of construction on any highway or related project submitted for approval to the Secretary of Transportation; or

Whoever knowingly makes any false statement, false representation, false report or false claim with respect to the character, quality, quantity, or cost of any work performed or to be performed, or materials furnished or to be furnished, in connection with the construction of any highway or related project approved by the Secretary of Transportation; or

Whoever knowingly makes any false statement or false representation as to material fact in any statement, certificate, or report submitted pursuant to provisions of the Federal-aid Roads Act approved July 1, 1916, (39 Stat. 355), as amended and supplemented;

Shall be fined under this title or imprisoned not more than 5 years or both."

IX. IMPLEMENTATION OF CLEAN AIR ACT AND FEDERAL WATER POLLUTION CONTROL ACT

This provision is applicable to all Federal-aid construction contracts and to all related subcontracts.

By submission of this bid/proposal or the execution of this contract, or subcontract, as appropriate, the bidder, proposer, Federal-aid construction contractor, or subcontractor, as appropriate, will be deemed to have stipulated as follows:

1. That any person who is or will be utilized in the performance of this contract is not prohibited from receiving an award due to a violation of Section 508 of the Clean Water Act or Section 306 of the Clean Air Act.
2. That the contractor agrees to include or cause to be included the requirements of paragraph (1) of this Section X in every subcontract, and further agrees to take such action as the contracting agency may direct as a means of enforcing such requirements.

X. CERTIFICATION REGARDING DEBARMENT, SUSPENSION, INELIGIBILITY AND VOLUNTARY EXCLUSION

This provision is applicable to all Federal-aid construction contracts, design-build contracts, subcontracts, lower-tier subcontracts, purchase orders, lease agreements, consultant contracts or any other covered transaction requiring FHWA approval or that is estimated to cost $25,000 or more – as defined in 2 CFR Parts 180 and 1200.

1**. Instructions for Certification – First Tier Participants:**

a. By signing and submitting this proposal, the prospective first tier participant is providing the certification set out below.

b. The inability of a person to provide the certification set out below will not necessarily result in denial of participation in this covered transaction. The prospective first tier participant shall submit an explanation of why it cannot provide the certification set out below. The certification or explanation will be considered in connection with the department or agency's determination whether to enter into this transaction. However, failure of the prospective first tier participant to furnish a certification or an explanation shall disqualify such a person from participation in this transaction.

c. The certification in this clause is a material representation of fact upon which reliance was placed when the contracting agency determined to enter into this transaction. If it is later determined that the prospective participant knowingly rendered an erroneous certification, in addition to other remedies available to the Federal Government, the contracting agency may terminate this transaction for cause of default.

d. The prospective first tier participant shall provide immediate written notice to the contracting agency to whom this proposal is submitted if any time the prospective first tier participant learns that its certification was erroneous when submitted or has become erroneous by reason of changed circumstances.

e. The terms "covered transaction," "debarred," "suspended," "ineligible," "participant," "person," "principal," and "voluntarily excluded," as used in this clause, are defined in 2 CFR Parts 180 and 1200. “First Tier Covered Transactions” refers to any covered transaction between a grantee or subgrantee of Federal funds and a participant (such as the prime or general contract). “Lower Tier Covered Transactions” refers to any covered transaction under a First Tier Covered Transaction (such as subcontracts). “First Tier Participant” refers to the participant who has entered into a covered transaction with a grantee or subgrantee of Federal funds (such as the prime or general contractor). “Lower Tier Participant” refers any participant who has entered into a covered transaction with a First Tier Participant or other Lower Tier Participants (such as subcontractors and suppliers).

f. The prospective first tier participant agrees by submitting this proposal that, should the proposed covered transaction be entered into, it shall not knowingly enter into any lower tier covered transaction with a person who is debarred, suspended, declared ineligible, or voluntarily excluded from participation in this covered transaction, unless authorized by the department or agency entering into this transaction.

g. The prospective first tier participant further agrees by submitting this proposal that it will include the clause titled "Certification Regarding Debarment, Suspension, Ineligibility and Voluntary Exclusion-Lower Tier Covered Transactions," provided by the department or contracting agency, entering into this covered transaction, without modification, in all lower tier covered transactions and in all solicitations for lower tier covered transactions exceeding the $25,000 threshold.

h. A participant in a covered transaction may rely upon a certification of a prospective participant in a lower tier covered transaction that is not debarred, suspended, ineligible, or voluntarily excluded from the covered transaction, unless it knows that the certification is erroneous. A participant is responsible for ensuring that its principals are not suspended, debarred, or otherwise ineligible to participate in covered transactions. To verify the eligibility of its principals, as well as the eligibility of any lower tier prospective participants, each participant may, but is not required to, check the Excluded Parties List System website (https://www.epls.gov/), which is compiled by the General Services Administration.

i. Nothing contained in the foregoing shall be construed to require the establishment of a system of records in order to render in good faith the certification required by this clause. The knowledge and information of the prospective participant is not required to exceed that which is normally possessed by a prudent person in the ordinary course of business dealings.

j. Except for transactions authorized under paragraph (f) of these instructions, if a participant in a covered transaction knowingly enters into a lower tier covered transaction with a person who is suspended, debarred, ineligible, or voluntarily excluded from participation in this transaction, in addition to other remedies available to the Federal Government, the department or agency may terminate this transaction for cause or default.

* * * * *

2. Certification Regarding Debarment, Suspension, Ineligibility and Voluntary Exclusion – First Tier Participants:

a. The prospective first tier participant certifies to the best of its knowledge and belief, that it and its principals:

(1) Are not presently debarred, suspended, proposed for debarment, declared ineligible, or voluntarily excluded from participating in covered transactions by any Federal department or agency;

(2) Have not within a three-year period preceding this proposal been convicted of or had a civil judgment rendered against them for commission of fraud or a criminal offense in connection with obtaining, attempting to obtain, or performing a public (Federal, State or local) transaction or contract under a public transaction; violation of Federal or State antitrust statutes or commission of embezzlement, theft, forgery, bribery, falsification or destruction of records, making false statements, or receiving stolen property;

(3) Are not presently indicted for or otherwise criminally or civilly charged by a governmental entity (Federal, State or local) with commission of any of the offenses enumerated in paragraph (a)(2) of this certification; and

(4) Have not within a three-year period preceding this application/proposal had one or more public transactions (Federal, State or local) terminated for cause or default.

b. Where the prospective participant is unable to certify to any of the statements in this certification, such prospective participant shall attach an explanation to this proposal.

2. **Instructions for Certification - Lower Tier Participants:**

(Applicable to all subcontracts, purchase orders and other lower tier transactions requiring prior FHWA approval or estimated to cost $25,000 or more - 2 CFR Parts 180 and 1200)

a. By signing and submitting this proposal, the prospective lower tier is providing the certification set out below.

b. The certification in this clause is a material representation of fact upon which reliance was placed when this transaction was entered into. If it is later determined that the prospective lower tier participant knowingly rendered an erroneous certification, in addition to other remedies available to the Federal Government, the department, or agency with which this transaction originated may pursue available remedies, including suspension and/or debarment.

c. The prospective lower tier participant shall provide immediate written notice to the person to which this proposal is submitted if at any time the prospective lower tier participant learns that its certification was erroneous by reason of changed circumstances.

d. The terms "covered transaction," "debarred," "suspended," "ineligible," "participant," "person," "principal," and "voluntarily excluded," as used in this clause, are defined in 2 CFR Parts 180 and 1200. You may contact the person to which this proposal is submitted for assistance in obtaining a copy of those regulations. “First Tier Covered Transactions” refers to any covered transaction between a grantee or subgrantee of Federal funds and a participant (such as the prime or general contract). “Lower Tier Covered Transactions” refers to any covered transaction under a First Tier Covered Transaction (such as subcontracts). “First Tier Participant” refers to the participant who has entered into a covered transaction with a grantee or subgrantee of Federal funds (such as the prime or general contractor). “Lower Tier Participant” refers any participant who has entered into a covered transaction with a First Tier Participant or other Lower Tier Participants (such as subcontractors and suppliers).

e. The prospective lower tier participant agrees by submitting this proposal that, should the proposed covered transaction be entered into, it shall not knowingly enter into any lower tier covered transaction with a person who is debarred, suspended, declared ineligible, or voluntarily excluded from participation in this covered transaction, unless authorized by the department or agency with which this transaction originated.

f. The prospective lower tier participant further agrees by submitting this proposal that it will include this clause titled "Certification Regarding Debarment, Suspension, Ineligibility and Voluntary Exclusion-Lower Tier Covered Transaction," without modification, in all lower tier covered transactions and in all solicitations for lower tier covered transactions exceeding the $25,000 threshold.

g. A participant in a covered transaction may rely upon a certification of a prospective participant in a lower tier covered transaction that is not debarred, suspended, ineligible, or voluntarily excluded from the covered transaction, unless it knows that the certification is erroneous. A participant is responsible for ensuring that its principals are not suspended, debarred, or otherwise ineligible to participate in covered transactions. To verify the eligibility of its principals, as well as the eligibility of any lower tier prospective participants, each participant may, but is not required to, check the Excluded Parties List System website (https://www.epls.gov/), which is compiled by the General Services Administration.

h. Nothing contained in the foregoing shall be construed to require establishment of a system of records in order to render in good faith the certification required by this clause. The knowledge and information of participant is not required to exceed that which is normally possessed by a prudent person in the ordinary course of business dealings.

i. Except for transactions authorized under paragraph e of these instructions, if a participant in a covered transaction knowingly enters into a lower tier covered transaction with a person who is suspended, debarred, ineligible, or voluntarily excluded from participation in this transaction, in addition to other remedies available to the Federal Government, the

department or agency with which this transaction originated may pursue available remedies, including suspension and/or debarment.

* * * * *

Certification Regarding Debarment, Suspension, Ineligibility and Voluntary Exclusion--Lower Tier Participants:

1. The prospective lower tier participant certifies, by submission of this proposal, that neither it nor its principals is presently debarred, suspended, proposed for debarment, declared ineligible, or voluntarily excluded from participating in covered transactions by any Federal department or agency.

2. Where the prospective lower tier participant is unable to certify to any of the statements in this certification, such prospective participant shall attach an explanation to this proposal.

* * * * *

XI. CERTIFICATION REGARDING USE OF CONTRACT FUNDS FOR LOBBYING

This provision is applicable to all Federal-aid construction contracts and to all related subcontracts which exceed $100,000 (49 CFR 20).

1. The prospective participant certifies, by signing and submitting this bid or proposal, to the best of his or her knowledge and belief, that:

a. No Federal appropriated funds have been paid or will be paid, by or on behalf of the undersigned, to any person for influencing or attempting to influence an officer or employee of any Federal agency, a Member of Congress, an officer or employee of Congress, or an employee of a Member of Congress in connection with the awarding of any Federal contract, the making of any Federal grant, the making of any Federal loan, the entering into of any cooperative agreement, and the extension, continuation, renewal, amendment, or modification of any Federal contract, grant, loan, or cooperative agreement.

b. If any funds other than Federal appropriated funds have been paid or will be paid to any person for influencing or attempting to influence an officer or employee of any Federal agency, a Member of Congress, an officer or employee of Congress, or an employee of a Member of Congress in connection with this Federal contract, grant, loan, or cooperative agreement, the undersigned shall complete and submit Standard Form-LLL, "Disclosure Form to Report Lobbying," in accordance with its instructions.

2. This certification is a material representation of fact upon which reliance was placed when this transaction was made or entered into. Submission of this certification is a prerequisite for making or entering into this transaction imposed by 31 U.S.C. 1352. Any person who fails to file the required certification shall be subject to a civil penalty of not less than $10,000 and not more than $100,000 for each such failure.

3. The prospective participant also agrees by submitting its bid or proposal that the participant shall require that the language of this certification be included in all lower tier subcontracts, which exceed $100,000 and that all such recipients shall certify and disclose accordingly.

ATTACHMENT A - EMPLOYMENT AND MATERIALS PREFERENCE FOR APPALACHIAN DEVELOPMENT HIGHWAY SYSTEM OR APPALACHIAN LOCAL ACCESS ROAD CONTRACTS

This provision is applicable to all Federal-aid projects funded under the Appalachian Regional Development Act of 1965.

1. During the performance of this contract, the contractor undertaking to do work which is, or reasonably may be, done as on-site work, shall give preference to qualified persons who regularly reside in the labor area as designated by the DOL wherein the contract work is situated, or the subregion, or the Appalachian counties of the State wherein the contract work is situated, except:

a. To the extent that qualified persons regularly residing in the area are not available.

b. For the reasonable needs of the contractor to employ supervisory or specially experienced personnel necessary to assure an efficient execution of the contract work.

c. For the obligation of the contractor to offer employment to present or former employees as the result of a lawful collective bargaining contract, provided that the number of nonresident persons employed under this subparagraph (1c) shall not exceed 20 percent of the total number of employees employed by the contractor on the contract work, except as provided in subparagraph (4) below.

2. The contractor shall place a job order with the State Employment Service indicating (a) the classifications of the laborers, mechanics and other employees required to perform the contract work, (b) the number of employees required in each classification, (c) the date on which the participant estimates such employees will be required, and (d) any other pertinent information required by the State Employment Service to complete the job order form. The job order may be placed with the State Employment Service in writing or by telephone. If during the course of the contract work, the information submitted by the contractor in the original job order is substantially modified, the participant shall promptly notify the State Employment Service.

3. The contractor shall give full consideration to all qualified job applicants referred to him by the State Employment Service. The contractor is not required to grant employment to any job applicants who, in his opinion, are not qualified to perform the classification of work required.

4. If, within one week following the placing of a job order by the contractor with the State Employment Service, the State Employment Service is unable to refer any qualified job applicants to the contractor, or less than the number requested, the State Employment Service will forward a certificate to the contractor indicating the unavailability of applicants. Such certificate shall be made a part of the contractor's permanent project records. Upon receipt of this certificate, the contractor may employ persons who do not normally reside in the labor area to fill positions covered by the certificate, notwithstanding the provisions of subparagraph (1c) above.

5. The provisions of 23 CFR 633.207(e) allow the contracting agency to provide a contractual preference for the use of mineral resource materials native to the Appalachian region.

6. The contractor shall include the provisions of Sections 1 through 4 of this Attachment A in every subcontract for work which is, or reasonably may be, done as on-site work.

KENTUCKY TRANSPORTATION CABINET
DEPARTMENT OF HIGHWAYS

EMPLOYMENT REQUIREMENTS
RELATING TO
NONDISCRIMINATION OF EMPLOYEES
(APPLICABLE TO FEDERAL-AID SYSTEM CONTRACTS)

AN ACT OF THE KENTUCKY GENERAL ASSEMBLY TO PREVENT DISCRIMINATION IN EMPLOYMENT

KRS CHAPTER 344
EFFECTIVE JUNE 16, 1972

The contract on this project, in accordance with KRS Chapter 344, provides that during the performance of this contract, the contractor agrees as follows:

1. The contractor shall not fail or refuse to hire, or shall not discharge any individual, or otherwise discriminate against an individual with respect to his compensation, terms, conditions, or privileges of employment, because of such individual's race, color, religion, national origin, sex, disability or age (between forty and seventy); or limit, segregate, or classify his employees in any way which would deprive or tend to deprive an individual of employment opportunities or otherwise adversely affect his status as an employee, because of such individual's race, color, religion, national origin, sex, disability or age (between forty and seventy). The contractor agrees to post in conspicuous places, available to employees and applicants for employment, notices to be provided setting forth the provisions of this nondiscrimination clause.

2. The contractor shall not print or publish or cause to be printed or published a notice or advertisement relating to employment by such an employer or membership in or any classification or referral for employment by the employment agency, indicating any preference, limitation, specification, or discrimination, based on race, color, religion, national origin, sex, disability or age (between forty and seventy), except that such notice or advertisement may indicate a preference, limitation, or specification based on religion, or national origin when religion, or national origin is a bona fide occupational qualification for employment.

3. If the contractor is in control of apprenticeship or other training or retraining, including on-the-job training programs, he shall not discriminate against an individual because of his race, color, religion, national origin, sex, disability or age (between forty and seventy), in admission to, or employment in any program established to provide apprenticeship or other training.

4. The contractor will send to each labor union or representative of workers with which he has a collective bargaining agreement or other contract or understanding, a notice to be provided advising the said labor union or workers' representative of the contractor's commitments under this section, and shall post copies of the notice in conspicuous places available to employees and applicants for employment. The contractor will take such action with respect to any subcontract or purchase order as the administrating agency may direct as a means of enforcing such provisions, including sanctions for non-compliance.

REVISED: 12-3-92

EXECUTIVE BRANCH CODE OF ETHICS

In the 1992 regular legislative session, the General Assembly passed and Governor Brereton Jones signed Senate Bill 63 (codified as KRS 11A), the Executive Branch Code of Ethics, which states, in part:

KRS 11A.040 (6) provides:

No present or former public servant shall, within six (6) months of following termination of his office or employment, accept employment, compensation or other economic benefit from any person or business that contracts or does business with the state in matters in which he was directly involved during his tenure. This provision shall not prohibit an individual from returning to the same business, firm, occupation, or profession in which he was involved prior to taking office or beginning his term of employment, provided that, for a period of six (6) months, he personally refrains from working on any matter in which he was directly involved in state government. This subsection shall not prohibit the performance of ministerial functions, including, but not limited to, filing tax returns, filing applications for permits or licenses, or filing incorporation papers.

KRS 11A.040 (8) states:

A former public servant shall not represent a person in a matter before a state agency in which the former public servant was directly involved, for a period of one (1) year after the latter of:

a) The date of leaving office or termination of employment; or
b) The date the term of office expires to which the public servant was elected.

This law is intended to promote public confidence in the integrity of state government and to declare as public policy the idea that state employees should view their work as a public trust and not as a way to obtain private benefits.

If you have worked for the executive branch of state government within the past six months, you may be subject to the law's prohibitions. The law's applicability may be different if you hold elected office or are contemplating representation of another before a state agency.

Also, if you are affiliated with a firm which does business with the state and which employs former state executive-branch employees, you should be aware that the law may apply to them.

In case of doubt, the law permits you to request an advisory opinion from the Executive Branch Ethics Commission, Room 136, Capitol Building, 700 Capitol Avenue, Frankfort, Kentucky 40601; telephone (502) 564-7954.

General Decision Number: KY130103 01/04/2013 KY103

Superseded General Decision Number: KY20120128

State: Kentucky

Construction Type: Highway

Counties: Adair, Barren, Bell, Breathitt, Casey, Clay, Clinton, Cumberland, Estill, Floyd, Garrard, Green, Harlan, Hart, Jackson, Johnson, Knott, Knox, Laurel, Lawrence, Lee, Leslie, Letcher, Lincoln, Magoffin, Martin, McCreary, Menifee, Metcalfe, Monroe, Morgan, Owsley, Perry, Pike, Powell, Pulaski, Rockcastle, Russell, Taylor, Wayne, Whitley and Wolfe Counties in Kentucky.

HIGHWAY CONSTRUCTION PROJECTS (excluding tunnels, building structures in rest area projects & railroad construction; bascule, suspension & spandrel arch bridges designed for commercial navigation, bridges involving marine construction; and other major bridges).

Modification Number	Publication Date
0	01/04/2013

* SUKY2010-164 07/12/2010

	Rates	Fringes
BRICKLAYER	$ 22.90	8.50
CARPENTER		
Carpenter	$ 21.40	8.50
Piledriverman	$ 21.05	8.50
CEMENT MASON/CONCRETE FINISHER	$ 21.25	8.50
ELECTRICIAN	$ 29.36	10.55
When required to work from bosum chairs on bridges where subject to direct fall, escept when using JLG's and bucket trucks up to 75 feet: Add 25% to base rate for 50 to 75 feet, and 50% over 75 feet.		
IRONWORKER	$ 24.99	18.22
LABORER		
(01) General Laborer, Flagman, Steam Jenny	$ 19.45	8.50
(02) Batch Truck Dumper, Deck Hand or Scow Man, Hand Blade Operator	$ 19.70	8.50
(03) Power Driven Tool Operator: Wagon Drill, Chain Saw, Sand Blaster, Concrete Chipper, Pavement Breaker, Vibrator, Power Wheelbarrow, Power Buggy, Sewer Pipe Layer, Bottom		

Men, Dry Cement Handler,
Concrete Rubber, Mason
Tender.....$ 19.80 8.50
(04) Asphalt Lute and
Rakerman, Side Rail Setter..$ 19.85 8.50
(05) Gunnite Nozzxleman,
Gunnite Operator.....$ 19.95 8.50
(06) Tunnel Laborer (Free
Air).....$ 20.00 8.50
(07) Tunnel Mucker (Free
Air).....$ 20.05 8.50
(08) Tunnel Miner, Blaster
and Driller (free Air).....$ 20.40 8.50
(09) Caisson Worker.....$ 20.95 8.50
(10) Powderman.....$ 21.05 8.50
(11) Drill Operator of
Percussion Type Drills
powered and propelled by
an independent air supply...$ 22.25 8.50

PAINTER
All Excluding Bridges.....$ 19.92 9.57
Bridges.....$ 23.92 10.07

PLUMBER.....$ 22.52 7.80

POWER EQUIPMENT OPERATOR:
GROUP 1.....$ 24.10 8.50
GROUP 2.....$ 21.20 8.50
GROUP 3.....$ 21.40 8.50
GROUP 4.....$ 20.79 8.50

POWER EQUIPMENT OPERATOR CLASSIFICATIONS:

GROUP 1: Auto Patrol, Batcher Plant, Bituminous Paver, Cable-Way, Clamshell, Concrete Mixer (21 cu ft or over), Concrete Pump, Crane, Crusher Plant, Derrick, Derrick Boat, Ditching and Trenching machine, Dragline, Dredge Engineer, Elevating Grader and all types of Loaders, Hoe-type Machine, Hoisting Engine, Locomotive, LeTourneau or carry-all scoop, Bulldozer, Mechanic, Orangepeel Bucket, Piledriver Operator, Power Blade, Roller (Bituminous), Roller (earth), Roller (Rock), Scarifier, Shovel, Tractor Shovel, Truck Crane, Well Point, Winch Truck, Push Dozer, Grout Pump, High Lift, Fork Lift (regardless of lift height), all types of Boom Cats, Multiple Operator, Core Drill, Tow or Push Boat, A-Frame Winch Truck, Concrete Paver, Grade-All, Hoist,m Hyster, Material Pump, Pumpcrete, Ross Carrier, Sheepfoot, Sideboom, Throttle-Valve man, Rotary Drill, Power Generator, Mucking Machine, Rock Spreader attached to Equipment, Scoopmobile, KeCal Loader, Tower Cranes, Hydrocrane, Tugger, Backfiller Gurries, Self-propelled Compactor, Self-Contained Hydraulic Percussion Drill

GROUP 2: All Air Compressors (200 cu ft/min or greater), Bituminous Mixer, Concrete Mixer (under 212 cu ft), Welding Machine, Form Grader, Tractor (50 hp and over), Bull Float, Finish Machine, Outboard Motor Boat, Brakeman, Mechanic Tender, Whirly Oiler, Tract-air, Road Widening Trencher, Articulating Trucks

GROUP 3: Greaser on Grease Facilities servicing Heavy

Equipment

GROUP 4: Bituminous Distributor, Cement Gun, Conveyor, Mud Jack, Paving Joint Machine, Pump, Tamping Machine, Tractor (under 50 hp), Vibrator, Oiler, Air Compressor (under 200 cu ft per minute), Concrete Saw, Burlap and Curing Machine, Hydro Seeder, Power Form Handling Equipment, Deckhand Oiler, hydraulic Post Driver

SHEET METAL WORKER.....$ 20.40 7.80

TRUCK DRIVER
(01) Truck Tender and Warehouseman.....$ 19.70 8.50
(02) Driver, Winch Truck and A-Frame when used in Transporting Materials.....$ 19.80 8.50
(03) Driver (Semi-trailer or Pole Trailer), Driver (Dump Truck, Tandem Axle), Driver of Distributor.....$ 19.90 8.50
(04) Driver on Mixer Trucks (all types).....$ 19.95 8.50
(05) Truck Mechanic.....$ 20.00 8.50
(06) Driver (3 tons and under), Tire Changer, Truck Mechanic Tender.....$ 20.03 8.50
(07) Driver on Pavement Breakers.....$ 20.05 8.50
(08) Driver (over 3 tons), Driver (Truck Mounted Rotary Drill).....$ 20.24 8.50
(09) Driver, Euclid and other Heavy Earth Moving Equipment.....$ 20.81 8.50
(10) Greaser on greasing facilities.....$ 20.90 8.50

WELDERS - Receive rate prescribed for craft performing operation to which welding is incidental.

==========

Unlisted classifications needed for work not included within the scope of the classifications listed may be added after award only as provided in the labor standards contract clauses (29CFR 5.5 (a) (1) (ii)).

The body of each wage determination lists the classification and wage rates that have been found to be prevailing for the cited type(s) of construction in the area covered by the wage determination. The classifications are listed in alphabetical order of "identifiers" that indicate whether the particular rate is union or non-union.

Union Identifiers

An identifier enclosed in dotted lines beginning with characters other than "SU" denotes that the union classification and rate have found to be prevailing for that classification. Example: PLUM0198-005 07/01/2011. The first four letters , PLUM, indicate the international union and the four-digit number, 0198, that follows indicates the local union number or district council number where applicable , i.e., Plumbers Local 0198. The next number, 005 in the example, is an internal number used in processing the wage determination. The date, 07/01/2011, following these characters is the effective date of the most current negotiated rate/collective bargaining agreement which would be July 1, 2011 in the above example.

Union prevailing wage rates will be updated to reflect any changes in the collective bargaining agreements governing the rates.

0000/9999: weighted union wage rates will be published annually each January.

Non-Union Identifiers

Classifications listed under an "SU" identifier were derived from survey data by computing average rates and are not union rates; however, the data used in computing these rates may include both union and non-union data. Example: SULA2004-007 5/13/2010. SU indicates the rates are not union majority rates, LA indicates the State of Louisiana; 2004 is the year of the survey; and 007 is an internal number used in producing the wage determination. A 1993 or later date, 5/13/2010, indicates the classifications and rates under that identifier were issued as a General Wage Determination on that date.

Survey wage rates will remain in effect and will not change until a new survey is conducted.

WAGE DETERMINATION APPEALS PROCESS

1.) Has there been an initial decision in the matter? This can be:

* an existing published wage determination
* a survey underlying a wage determination
* a Wage and Hour Division letter setting forth a position on a wage determination matter
* a conformance (additional classification and rate) ruling

On survey related matters, initial contact, including requests for summaries of surveys, should be with the Wage and Hour Regional Office for the area in which the survey was conducted

because those Regional Offices have responsibility for the Davis-Bacon survey program. If the response from this initial contact is not satisfactory, then the process described in 2.) and 3.) should be followed.

With regard to any other matter not yet ripe for the formal process described here, initial contact should be with the Branch of Construction Wage Determinations. Write to:

Branch of Construction Wage Determinations
Wage and Hour Division
U.S. Department of Labor
200 Constitution Avenue, N.W.
Washington, DC 20210

2.) If the answer to the question in 1.) is yes, then an interested party (those affected by the action) can request review and reconsideration from the Wage and Hour Administrator (See 29 CFR Part 1.8 and 29 CFR Part 7). Write to:

Wage and Hour Administrator
U.S. Department of Labor
200 Constitution Avenue, N.W.
Washington, DC 20210

The request should be accompanied by a full statement of the interested party's position and by any information (wage payment data, project description, area practice material, etc.) that the requestor considers relevant to the issue.

3.) If the decision of the Administrator is not favorable, an interested party may appeal directly to the Administrative Review Board (formerly the Wage Appeals Board). Write to:

Administrative Review Board
U.S. Department of Labor
200 Constitution Avenue, N.W.
Washington, DC 20210

4.) All decisions by the Administrative Review Board are final.

==========

END OF GENERAL DECISION

Fringe benefit amounts are applicable for all hours worked except when otherwise noted.

No laborer, workman or mechanic shall be paid at a rate less than that of a Journeyman except those classified as bona fide apprentices.

Apprentices or trainees shall be permitted to work as such subject to Administrative Regulations adopted by the Commissioner of Workplace Standards. Copies of these regulations will be furnished upon request from any interested person.

Before using apprentices on the job the contractor shall present to the Contracting Officer written evidence of registration of such employees in a program of a State apprenticeship and training agency approved and recognized by the U. S. Bureau of Apprenticeship and Training. In the absence of such a State agency, the contractor shall submit evidence of approval and registration by the U. S. Bureau of Apprenticeship and Training.

The contractor shall submit to the Contracting Officer, written evidence of the established apprenticeship-journeyman ratios and wage rates in the project area, which will be the basis for establishing such ratios and rates for the project under the applicable contract provisions.

TO: EMPLOYERS/EMPLOYEES

PREVAILING WAGE SCHEDULE:
The wages indicated on this wage schedule are the least permitted to be paid for the occupations indicated. When an employee works in more than one classification, the employer must record the number of hours worked in each classification at the prescribed hourly base rate.
OVERTIME:
Overtime is to be paid after an employee works eight (8) hours a day or forty (40) hours a week, whichever gives the employee the greater wages. At least time and one-half the base rate is required for all overtime. A laborer, workman or mechanic and an employer may enter into a written agreement or a collective bargaining agreement to work more than eight (8) hours a calendar day but not more than ten (10) hours a calendar day for the straight time hourly rate. Wage violations or questions should be directed to the designated Engineer or the undersigned.

Ryan Griffith, Director
Division of Construction Procurement
Frankfort, Kentucky 40622

NOTICE OF REQUIREMENT FOR AFFIRMATIVE ACTION TO ENSURE EQUAL EMPLOYMENT OPPORTUNITY (Executive Order 11246)

1. The Offeror's or Bidder's attention is called to the "Equal Opportunity Clause" and the "Standard Federal Equal Employment Specifications" set forth herein.

2. The goals and timetables for minority and female participation, expressed in percentage terms for the Contractor's aggregate work force in each trade on all construction work in the covered area, are as follows:

GOALS FOR MINORITY PARTICIPATION IN EACH TRADE	GOALS FOR FEMALE PARTICIPATION IN EACH TRADE
2.5%	6.9%

These goals are applicable to all the Contractor's construction work (whether or not it is Federal or federally-assisted) performed in the covered area. If the contractor performs construction work in a geographical area located outside of the covered area, it shall apply the goals established for such geographical area where the work is actually performed. With regard to this second area, the contractor also is subject to the goals for both its federally involved and non-federally involved construction.

The Contractor's compliance with the Executive Order and the regulations in CFR Part 60-4 shall be based on its implementation of the Equal Opportunity Clause, specific affirmative action obligations required by the specifications set forth in 41 CFR 60-4, 3(a), and its efforts to meet the goals. The hours of minority and female employment and training must be substantially uniform throughout the length of the contract, and in each trade, and the contractor shall make a good faith effort to employ minorities and women evenly on each of its projects. The transfer of minority or female employees or trainees from Contractor to Contractor or from project to project for the sole purpose of meeting the Contractor's goals shall be a violation of the contract, the Executive Order and the regulations in 41 CFR Part 60-4. Compliance with the goals will be measured against the total work hours performed.

3. The Contractor shall provide written notification to the Director of the Office of Federal Contract Compliance Programs within ten (10) working days of award of any construction subcontract in excess of $10,000.00 at any tier for construction work under the contract resulting from this solicitation. The notification shall list the name, address and telephone number of the subcontractor; employer identification number of the subcontractor; estimated dollar amount of the subcontract; estimated starting and completion dates of the subcontract; and the geographical area in which the subcontract is to be performed. The notification shall be mailed to:

Evelyn Teague, Regional Director
Office of Federal Contract Compliance Programs
61 Forsyth Street, SW, Suite 7B75
Atlanta, Georgia 30303-8609

4. As used in this Notice, and in the contract resulting from this solicitation, the **"covered area"** is Johnson County.

NOTICE OF REQUIREMENT FOR AFFIRMATIVE ACTION TO ENSURE EQUAL EMPLOYMENT OPPORTUNITY (Executive Order 11246)

1. The Offeror's or Bidder's attention is called to the "Equal Opportunity Clause" and the "Standard Federal Equal Employment Specifications" set forth herein.

2. The goals and timetables for minority and female participation, expressed in percentage terms for the Contractor's aggregate work force in each trade on all construction work in the covered area, are as follows:

GOALS FOR MINORITY PARTICIPATION IN EACH TRADE	GOALS FOR FEMALE PARTICIPATION IN EACH TRADE
2.5%	6.9%

These goals are applicable to all the Contractor's construction work (whether or not it is Federal or federally-assisted) performed in the covered area. If the contractor performs construction work in a geographical area located outside of the covered area, it shall apply the goals established for such geographical area where the work is actually performed. With regard to this second area, the contractor also is subject to the goals for both its federally involved and non-federally involved construction.

The Contractor's compliance with the Executive Order and the regulations in CFR Part 60-4 shall be based on its implementation of the Equal Opportunity Clause, specific affirmative action obligations required by the specifications set forth in 41 CFR 60-4, 3(a), and its efforts to meet the goals. The hours of minority and female employment and training must be substantially uniform throughout the length of the contract, and in each trade, and the contractor shall make a good faith effort to employ minorities and women evenly on each of its projects. The transfer of minority or female employees or trainees from Contractor to Contractor or from project to project for the sole purpose of meeting the Contractor's goals shall be a violation of the contract, the Executive Order and the regulations in 41 CFR Part 60-4. Compliance with the goals will be measured against the total work hours performed.

3. The Contractor shall provide written notification to the Director of the Office of Federal Contract Compliance Programs within ten (10) working days of award of any construction subcontract in excess of $10,000.00 at any tier for construction work under the contract resulting from this solicitation. The notification shall list the name, address and telephone number of the subcontractor; employer identification number of the subcontractor; estimated dollar amount of the subcontract; estimated starting and completion dates of the subcontract; and the geographical area in which the subcontract is to be performed. The notification shall be mailed to:

Evelyn Teague, Regional Director
Office of Federal Contract Compliance Programs
61 Forsyth Street, SW, Suite 7B75
Atlanta, Georgia 30303-8609

4. As used in this Notice, and in the contract resulting from this solicitation, the **"covered area"** is Lawrence County.

PART IV

INSURANCE

INSURANCE

The Contractor shall procure and maintain the following insurance in addition to the insurance required by law:

1) Commercial General Liability-Occurrence form – not less than $2,000,000 General aggregate, $2,000,000 Products & Completed Aggregate, $1,000,000 Personal & Advertising, $1,000,000 each occurrence.

2) Automobile Liability- $1,000,000 per accident

3) Employers Liability:

   a) $100,000 Each Accident Bodily Injury
   b) $500,000 Policy limit Bodily Injury by Disease
   c) $100,000 Each Employee Bodily Injury by Disease

4) The insurance required above must be evidenced by a Certificate of Insurance and this Certificate of Insurance must contain one of the following statements:
   a) "policy contains no deductible clauses."
   b) "policy contains _____ (amount) deductible property damage clause but company will pay claim and collect the deductible from the insured."

5) KENTUCKY WORKMEN'S COMPENSATION INSURANCE. The contractor shall furnish evidence of coverage of all his employees or give evidence of self-insurance by submitting a copy of a certificate issued by the Workmen's Compensation Board.

The cost of insurance is incidental to all contract items. All subcontractors must meet the same minimum insurance requirements.

PART V

BID ITEMS

132223

PROPOSAL BID ITEMS

Page 1 of 1

Report Date 3/27/13

Section: 0001 - ROADWAY

LINE	BID CODE	ALT	DESCRIPTION	QUANTITY	UNIT	UNIT PRICI	FP	AMOUNT
0010	00001		DGA BASE	220.00	TON		$	
0020	01987		DELINEATOR FOR GUARDRAIL BI DIRECTIONAL WHITE	88.00	EACH		$	
0030	02351		GUARDRAIL-STEEL W BEAM-S FACE	4,350.00	LF		$	
0040	02360		GUARDRAIL TERMINAL SECTION NO 1	7.00	EACH		$	
0050	02371		GUARDRAIL END TREATMENT TYPE 7	5.00	EACH		$	
0060	02373		GUARDRAIL END TREATMENT TYPE 3	4.00	EACH		$	
0070	02399		EXTRA LENGTH GUARDRAIL POST	272.00	EACH		$	
0080	02562		TEMPORARY SIGNS	300.00	SQFT		$	
0090	02650		MAINTAIN & CONTROL TRAFFIC(KY 172)	1.00	LS		$	
0100	02650		MAINTAIN & CONTROL TRAFFIC(KY 644)	1.00	LS		$	
0110	03236		CRIBBING	3,200.00	SQFT		$	

Section: 0002 - DEMOBILIZATION

LINE	BID CODE	ALT	DESCRIPTION	QUANTITY	UNIT	UNIT PRICI	FP	AMOUNT
0120	02569		DEMOBILIZATION	1.00	LS		$	