CALL NO. 174

CONTRACT ID. 101603

OLDHAM COUNTY

FED/STATE PROJECT NUMBER ARRA 3001(394)

DESCRIPTION VARIOUS ROADS IN OLDHAM COUNTY

WORK TYPE GUARDRAIL

PRIMARY COMPLETION DATE 11/15/2010

LETTING DATE: February 26, 2010

Sealed Bids will be received in the Division of Construction Procurement and/or the 1st floor of the Transportation Cabinet Office Building until 10:00 AM EASTERN STANDARD TIME February 26, 2010. Bids will be publicly opened and read at 10:00 AM EASTERN STANDARD TIME.

DBE CERTIFICATION REQUIRED - 0%

REQUIRED BID PROPOSAL GUARANTY: Not less than 5% of the total bid.

(Check guaranty submitted: Cashier's Check ☐ Certified Check ☐ Bid Bond ☐)

BID BONDS WHEN SUBMITTED WILL BE RETAINED WITH THE PROPOSAL

DBE General Plan Included ☐

BID ☐ PROPOSAL ISSUED TO: _____

SPECIMEN ☐ _____

Address City State Zip

TABLE OF CONTENTS

PART I SCOPE OF WORK
- PROJECT(S), COMPLETION DATE(S), & LIQUIDATED DAMAGES
- CONTRACT NOTES
- FEDERAL CONTRACT NOTES
- AMERICAN RECOVERY AND REINVESTMENT ACT OF 2009
- GUARDRAIL
- TRAFFIC CONTROL PLAN
- RIGHT OF WAY NOTES
- UTILITY CLEARANCE
- SKETCH MAP(S)
- SUMMARY SHEET(S)
- DETAIL SHEET(S)

PART II SPECIFICATIONS AND STANDARD DRAWINGS
- SPECIFICATIONS REFERENCE
- SUPPLEMENTAL SPECIFICATIONS
- STANDARD DRAWINGS THAT APPLY
- DELINEATORS FOR GUARDRAIL

PART III EMPLOYMENT, WAGE AND RECORD REQUIREMENTS
- FEDERAL-AID CONSTRUCTION CONTRACTS - FHWA 1273
- NONDISCRIMINATION OF EMPLOYEES
- EXECUTIVE BRANCH CODE OF ETHICS
- PROJECT WAGE RATES
- NOTICE OF REQUIREMENT FOR AFFIRMATIVE ACTION TO ENSURE EEO

PART IV INSURANCE

PART V BID ITEMS

PART I

SCOPE OF WORK

CONTRACT ID - 101603 ADMINISTRATIVE DISTRICT - 05

PROJECT(S) IDENTIFICATION AND DESCRIPTION:

COUNTY - OLDHAM PCN - DL09373141001
ARRA 3001(394)
VARIOUS ROADS IN OLDHAM COUNTY MAYO LANE, LOCKE LANE AND EIGHTEEN MILE CREEK IN OLDHAM CO. (KIPDA 1657). GUARDRAIL.
GEOGRAPHIC COORDINATES LATITUDE 38^49'18" LONGITUDE 85^41'12"
AVERAGE MAINLINE WIDTH - 16.0 FEET

COMPLETION DATE(S):
COMPLETION DATE - November 15, 2010
APPLIES TO ENTIRE CONTRACT

CONTRACT NOTES

PROPOSAL ADDENDA

All addenda to this proposal must be applied when calculating bid and certified in the bid packet submitted to the Kentucky Department of Highways. Failure to use the correct and most recent addenda may result in the bid being rejected.

BID SUBMITTAL

Bidder must use the Department's Expedite Bidding Program available on the Internet web site of the Department of Highways, Division of Construction Procurement. (www.transportation.ky.gov/contract)

The Bidder must download the bid file located on the web site to prepare a bid packet for submission to the Department. The bidder must include the completed bid packet printed from the Program along with the disk created by said program.

JOINT VENTURE BIDDING

Joint Venture bidding is permissible. However, both companies MUST purchase a bidding proposal. Either proposal may be submitted but must contain the company names and signatures of both parties where required. A joint bid bond of 5% may be submitted for both companies or each company may submit a separate bond of 5%.

UNDERGROUND FACILITY DAMAGE PROTECTION

The contractor is advised that the Underground Facility Damage Protection Act of 1994, became law January 1, 1995. It is the contractor's responsibility to determine the impact of the act regarding this project, and take all steps necessary to be in compliance with the provision of the act.

01/01/2009

FEDERAL CONTRACT NOTES

The Kentucky Department of Highways, in accordance with the Regulations of the United States Department of Transportation 23 CFR 635.112 (h), hereby notifies all bidders that failure by a bidder to comply with all applicable sections of the current Kentucky Standard Specifications, including, but not limited to the following, may result in a bid not being considered responsive and thus not eligible to be considered for award:

102.02 Current Capacity Rating
102.08 Irregular Proposals
102.09 Proposal Guaranty
102.10 Delivery of Proposals
102.14 Disqualification of Bidders

CIVIL RIGHTS ACT OF 1964

The Kentucky Department of Highways, in accordance with the provisions of Title VI of the Civil Rights Act of 1964 (78 Stat. 252) and the Regulations of the Federal Department of Transportation (49 C.F.R., Part 21), issued pursuant to such Act, hereby notifies all bidders that it will affirmatively insure that the contract entered into pursuant to this advertisement will be awarded to the lowest responsible bidder without discrimination on the ground of race, color, or national origin.

NOTICE TO ALL BIDDERS

To report bid rigging activities call: 1-800-424-9071.

The U.S. Department of Transportation (DOT) operates the above toll-free "hotline" Monday through Friday, 8:00 a.m. to 5:00 p.m. eastern time. Anyone with knowledge of possible bid rigging, bidder collusion, or other fraudulent activities should use the "hotline" to report such activities.

The "hotline" is part of the DOT's continuing effort to identify and investigate highway construction contract fraud and abuse and is operated under the direction of the DOT Inspector General. All information will be treated confidentially and caller anonymity will be respected.

FHWA 1273

The requirements of Paragraph VI of FHWA 1273 does not apply to projects with a total cost of less than $1,000,000.00.

SECOND TIER SUBCONTRACTS

Second Tier subcontracts on federally assisted projects shall be permitted. However, in the case of DBE's, second tier subcontracts will only be permitted where the other

subcontractor is also a DBE. All second tier subcontracts shall have the consent of both the Contractor and the Engineer.

DISADVANTAGED BUSINESS ENTERPRISE PROGRAM

It is the policy of the Kentucky Transportation Cabinet ("the Cabinet") that Disadvantaged Business Enterprises ("DBE") shall have the opportunity to participate in the performance of highway construction projects financed in whole or in part by Federal Funds in order to create a level playing field for all businesses who wish to contract with the Cabinet. To that end, the Cabinet will comply with the regulations found in 49 CFR Part 26, and the definitions and requirements contained therein shall be adopted as if set out verbatim herein.

The Cabinet, contractors, subcontractors, and sub-recipients shall not discriminate on the basis of race, color, national origin, or sex in the performance of work performed pursuant to Cabinet contracts. The contractor shall carry out applicable requirements of 49 CFR 26 in the award and administration of federally assisted highway construction projects. The contractor will include this provision in all its subcontracts and supply agreements pertaining to contracts with the Cabinet.

Failure by the contractor to carry out these requirements is a material breach of its contract with the Cabinet, which may result in the termination of the contract or such other remedy as the Cabinet deems necessary.

DBE GOAL

The Disadvantaged Business Enterprise (DBE) goal established for this contract, as listed on the front page of the proposal, is the percentage of the total value of the contract.

The contractor shall exercise all necessary and reasonable steps to ensure that Disadvantaged Business Enterprises participate in a least the percent of the contract as set forth above as goals for this contract.

OBLIGATION OF CONTRACTORS

Each contractor prequalified to perform work on Cabinet projects shall designate and make known to the Cabinet a liaison officer who is assigned the responsibility of effectively administering and promoting an active program for utilization of DBEs.

If a formal goal has not been designated for the contract, all contractors are encouraged to consider DBEs for subcontract work as well as for the supply of material and services needed to perform this work.

Contractors are encouraged to use the services of banks owned and controlled by minorities and women.

CERTIFICATION OF CONTRACT GOAL

Contractors shall include the following certification in bids for projects for which a DBE goal has been established. BIDS SUBMITTED WHICH DO NOT INCLUDE CERTIFICATION OF DBE PARTICIPATION WILL NOT BE READ PUBLICLY. These bids will not be considered for award by the Cabinet and they will be returned to the bidder.

"The bidder certifies that it has secured participation by Disadvantaged Business Enterprises ("DBE") in the amount of ____ percent of the total value of this contract and that the DBE participation is in compliance with the requirements of 49 CFR 26 and the policies of the Kentucky Transportation Cabinet pertaining to the DBE Program."

The certification statement is located in the printed bid packet. All contractors must certify their DBE participation on that page. DBEs utilized in achieving the DBE goal must be certified and prequalified for the work items at the time the bid is submitted.

DBE PARTICIPATION PLAN

All bidders are encouraged to submit their General DBE Participation Plan with their bid on the official form. Lowest responsive bidders whose bid packages include DBE Participation Plans may be awarded the contract at the next Awards Committee meeting provided that the DBE goal is met. The DBE Participation Plan shall include the following:

1. Name and address of DBE Subcontractor(s) and/or supplier(s) intended to be used in the proposed project;
2. Description of the work each is to perform including the work item , unit, quantity, unit price and total amount of the work to be performed by the individual DBE;
3. The dollar value of each proposed DBE subcontract and the percentage of total project contract value this represents. DBE participation may be counted as follows;
   a) If DBE suppliers and manufactures assume actual and contractual responsibility, the dollar value of materials to be furnished will be counted toward the goal as follows:
      - The entire expenditure paid to a DBE manufacturer;
      - 60 percent of expenditures to DBE suppliers that are not manufacturers provided the supplier is a regular dealer in the product involved. A regular dealer must be engaged in, as its principal business and in its own name, the sale of products to the public, maintain an inventory and own and operate distribution equipment; and
      - the amount of fees or commissions charged by the DBE firms for a bona fide service, such as professional, technical, consultant, or managerial services and assistance in the procurement of essential personnel,

facilities, equipment, materials, supplies, delivery of materials and supplies or for furnishing bonds, or insurance, providing such fees or commissions are determined to be reasonable and customary.

b) The dollar value of services provided by DBEs such as quality control testing, equipment repair and maintenance, engineering, staking, etc.;
c) The dollar value of joint ventures. DBE credit for joint ventures will be limited to the dollar amount of the work actually performed by the DBE in the joint venture;

4. Written and signed documentation of the bidder's commitment to use a DBE contractor whose participation is being utilized to meet the DBE goal; and
5. Written and signed confirmation from the DBE that it is participating in the contract as provided in the prime contractor's commitment.

The apparent low bidder who does not submit a General DBE Participation Plan with the bid shall submit it within 10 calendar days after receipt of notification that they are the apparent low bidder. The project will not be considered for award prior to submission and approval of the apparent low bidder's DBE Participation Plan.

Detailed DBE Participation Plan forms will be included in the Contractor Package presented to successful bidders following the awarding of the project. The Detailed DBE Participation Plan must be completed and returned to Contract Procurement in accordance with Cabinet policy. A copy of the blank estimate will be included with the Detailed DBE Participation Plan to list sequence items by PCN (Project Control Number).

Changes to DBE Participation Plans must be approved by the Cabinet. The Cabinet may consider extenuating circumstances including, but not limited to, changes in the nature or scope of the project, the inability or unwillingness of a DBE to perform the work in accordance with the bid, and/or other circumstances beyond the control of the prime contractor.

CONSIDERATION OF GOOD FAITH EFFORTS REQUESTS

If the DBE participation submitted in the bid by the apparent lowest responsive bidder does not meet or exceed the DBE contract goal, the apparent lowest responsive bidder must submit a Good Faith Effort Package to satisfy the Cabinet that sufficient good faith efforts were made to meet the contract goals prior to submission of the bid. Efforts to increase the goal after bid submission will not be considered in justifying the good faith effort, unless the contractor can show that the proposed DBE was solicited prior to the letting date. DBEs utilized in achieving the DBE goal must be certified and prequalified for the work items at the time the bid is submitted. One complete set and nine (9) copies of this information must be received in the office of the Division of Contract Procurement no later than 12:00 noon of the tenth calendar day after receipt of notification that they are the apparent low bidder.

Where the information submitted includes repetitious solicitation letters it will be acceptable to submit a sample representative letter along with a distribution list of the firms solicited. Documentation of DBE quotations shall be a part of the good faith effort submittal as necessary to demonstrate compliance with the factors listed below which the Cabinet considers in judging good faith efforts. This documentation may include written subcontractors' quotations, telephone log notations of verbal quotations, or other types of quotation documentation.

The Good Faith Effort Package shall include, but may not be limited to information showing evidence of the following:

1. Whether the bidder attended any pre-bid meetings that were scheduled by the Cabinet to inform DBEs of subcontracting opportunities;
2. Whether the bidder provided solicitations through all reasonable and available means;
3. Whether the bidder provided written notice to all DBEs listed in the DBE directory at the time of the letting who are prequalified in the areas of work that the bidder will be subcontracting;
4. Whether the bidder followed up initial solicitations of interest by contacting DBEs to determine with certainly whether they were interested. If a reasonable amount of DBEs within the targeted districts do not provide an intent to quote or no DBEs are prequalified in the subcontracted areas, the bidder must notify the DBE Liaison in the Office of Minority Affairs to give notification of the bidder's inability to get DBE quotes;
5. Whether the bidder selected portions of the work to be performed by DBEs in order to increase the likelihood of meeting the contract goals. This includes, where appropriate, breaking out contract work items into economically feasible units to facilitate DBE participation, even when the prime contractor might otherwise perform these work items with its own forces;
6. Whether the bidder provided interested DBEs with adequate and timely information about the plans, specifications, and requirements of the contract;
7. Whether the bidder negotiated in good faith with interested DBEs not rejecting them as unqualified without sound reasons based on a thorough investigation of their capabilities. Any rejection should be so noted in writing with a description as to why an agreement could not be reached;
8. Whether quotations were received from interested DBE firms but were rejected as unacceptable without sound reasons why the quotations were considered unacceptable. The fact that the DBE firm's quotation for the work is not the lowest quotation received will not in itself be considered as a sound reason for rejecting the quotation as unacceptable. The fact that the bidder has the ability and/or desire to perform the contract work with its own forces will not be considered a sound reason for rejecting a DBE quote. Nothing in this provision shall be construed to require the bidder to accept unreasonable quotes in order to satisfy DBE goals;

9. Whether the bidder specifically negotiated with subcontractors to assume part of the responsibility to meet the contract DBE goal when the work to be subcontracted includes potential DBE participation;
10. Whether the bidder made any efforts and/or offered assistance to interested DBEs in obtaining the necessary equipment, supplies, materials, insurance and/or bonding to satisfy the work requirements of the bid proposal; and
11. Any other evidence that the bidder submits which may show that the bidder has made reasonable good faith efforts to include DBE participation.

FAILURE TO MEET GOOD FAITH REQUIREMENT

Where the apparent lowest responsive bidder fails to submit sufficient participation by DBE firms to meet the contract goal and upon a determination by the Good Faith Committee based upon the information submitted that the apparent lowest responsive bidder failed to make sufficient reasonable efforts to meet the contract goal, the bidder will be offered the opportunity to meet in person for administrative reconsideration. The bidder will be notified of the Committee's decision within 24 hours of its decision. The bidder will have 24 hours to request reconsideration of the Committee's decision. The reconsideration meeting will be held within two days of the receipt of a request by the bidder for reconsideration.

The request for reconsideration will be heard by the Office of the Secretary. The bidder will have the opportunity to present written documentation or argument concerning the issue of whether it met the goal or made an adequate good faith effort. The bidder will receive a written decision on the reconsideration explaining the basis for the finding that the bidder did or did not meet the goal or made adequate Good Faith efforts to do so.

The result of the reconsideration process is not administratively appealable to the Cabinet or to the United States Department of Transportation.

The Cabinet reserves the right to award the contract to the next lowest responsive bidder or to rebid the contract in the event that the contract is not awarded to the low bidder as the result of a failure to meet the good faith requirement.

SANCTIONS FOR FAILURE TO MEET DBE REQUIREMENTS OF THE PROJECT

Failure by the prime contractor to fulfill the DBE requirements of a project under contract or to demonstrate good faith efforts to meet the goal constitutes a breach of contract. When this occurs, the Cabinet will hold the prime contractor accountable, as would be the case with all other contract provisions. Therefore, the contractor's failure to carry our the DBE contract requirements shall constitute a breach of contract and as such the Cabinet reserves the right to exercise all administrative remedies at its disposal including, but not limited to the following:

- Disallow credit toward the DBE goal;
- Withholding progress payments;

- Withholding payment to the prime in an amount equal to the unmet portion of the contract goal; and/or
- Termination of the contract.

PROMPT PAYMENT

The prime contractor will be required to pay the DBE within seven (7) working days after he or she has received payment from the Kentucky Transportation Cabinet for work performed or materials furnished.

CONTRACTOR REPORTING

All contractors must keep detailed records and provide reports to the Cabinet on their progress in meeting the DBE requirement on any highway contract. These records may include, but shall not be limited to payroll, lease agreements, cancelled payroll checks, executed subcontracting agreements, etc. Prime contractors will be required to submit certified reports on monies paid to each DBE subcontractor or supplier utilized to meet a DBE goal.

Payment information that needs to be reported includes date the payment is sent to the DBE, check number, Contract ID, amount of payment and the check date. Before Final Payment is made on this contract, the Prime Contractor will certify that all payments were made to the DBE subcontractor and/or DBE suppliers.

The Prime Contractor should supply the payment information at the time the DBE is compensated for their work. Form to use is located at:
http://transportation.ky.gov/construction/forms/DBEcheck.xls

Photocopied payments and completed form to be submitted to:
Office of Civil Rights and Small Business Development
6th Floor West
200 Mero Street
Frankfort, KY 40622

DEFAULT OR DECERTIFICATION OF THE DBE

If the DBE subcontractor or supplier is decertified or defaults in the performance of its work, and the overall goal cannot be credited for the uncompleted work, the prime contractor may utilize a substitute DBE or elect to fulfill the DBE goal with another DBE on a different work item. If after exerting good faith effort in accordance with the Cabinet's Good Faith Effort policies and procedures, the prime contractor is unable to replace the DBE, then the unmet portion of the goal may be waived at the discretion of the Cabinet.

Kentucky Transportation Cabinet
General DBE Participation Plan*

06/13/2005

Letting Date: _____ Contract ID Number _____ Project Number: _____

Designated DBE Goal % _____

Prime Contractor _____ DBE Company Name _____

Address _____

City, State, Zip _____

Federal Tax ID _____

Type of DBE Work: (all applicable)

_____ Supplier _____ Subcontractor _____ Manufacturer _____ Engineering _____ Other _____

Itemized worked to be performed by DBE Company:

Supplier 60% Y/N	Item Number	Description of Participation Item	Unit of Measure	Quantity to be Performed by DBE	DBE Unit Price **	Dollar Amount (based on DBE
					Total other Page	
					Total This DBE	
					Total Bid	
					% Credited toward Goal, this DBE	

**Note: 60 percent of expenditures to DBE suppliers that are not manufacturers provided the supplier is a regular dealer in the product involved. A regular dealer must be engaged in, as its principal business and in its own name, the sale of products to the public, maintain an inventory and own and operate distribution equipment

Prime Contractor's Signature: _____ Title: _____ Date: _____

DBE Participant Signature: _____ Title: _____ Date: _____

***This form must be completed for each DBE participant**

KYTC
DBE Payments

updated 2/28/08

Prime Contractor	Cont-ID
DBE Contractor	**CHECK #**
PAYMENT DATE	**Amount of Payment**

Use the section below to show multiple payments using the same check

Cont-ID	Amount	Cont-ID	Amount

Comments:

attach copy of check here

Mail to:
Office of Civil Rights and Small Business Development
200 Mero Street
6th Floor West TCOB
Frankfort, KY 40622

to be Submitted within 7 days of receipt of payment from KYTC

SPECIAL NOTES FOR PROJECTS FUNDED BY THE AMERICAN RECOVERY AND REINVESTMENT ACT OF 2009

SPECIAL NOTE FOR DAVIS-BACON PREVAILING WAGE RATES FOR PROJECTS FUNDED BY THE AMERICAN RECOVERY AND REINVESTMENT ACT OF 2009

This Special Note will apply when indicated on the plans,
in the proposal, or by addendum.

Davis-Bacon Prevailing Wage Rates (Section 1606) - Prevailing wage rate requirements apply to all Recovery Act funded construction projects regardless of location (including projects on local roads or rural minor collectors, and Transportation Enhancement projects outside the highway right-of-way). Contracting agencies must include the appropriate wage rate information in the contract and also include a contract provision that overrides the general applicability provisions in form FHWA-1273, Section IV and V.

SPECIAL NOTE FOR PROJECTS FUNDED BY THE AMERICAN RECOVERY AND REINVESTMENT ACT OF 2009 AS THEY RELATE TO THE GOVERNMENT ACCOUNTABILITY OFFICE AND THE OFFICE OF INSPECTOR GENERAL

This Special Note will apply when indicated on the plans,
in the proposal, or by addendum.

Requirement for Section 902 of the Recovery Act relating to Government Accountability Office (GOA) as follows:

Required Contract Provision to Implement Recovery Act Section 902:

Section 902 of the American Recovery and Reinvestment Act (Recovery Act) of 2009 requires that each contract awarded using Recovery Act funds must include a provision that provides the U.S. Comptroller General and his representatives with the authority to:

"(1) to examine any records of the contractor or any of its subcontractors, or any State or local agency administering such contract, that directly pertain to, and involve transactions relating to, the contract or subcontract; and

(2) To interview any officer or employee of the contractor or any of its subcontractors, or of any State or local government agency administering the contract, regarding such transactions."

Accordingly, the Comptroller General and his representatives shall have the authority and rights as provided under Section 902 of the Recovery Act with respect to this contract, which is funded with funds made available under the Recovery Act. Section 902 further states that nothing in this section shall be interpreted to limit or restrict in any way any existing authority of the Comptroller General.

Requirement for Section 1515(a) of the Recovery Act relating to Office of Inspector General (OIG) as follows:

Section 1515(a) of the Recovery Act provides authority for any representatives of the Inspector General to examine any records or interview any employee or officers working on this contract. The contractor is advised that representatives of the inspector general have the authority to examine any record and interview any employee or officer of the contractor, its subcontractors or other firms working on this contract. Section 1515(b) further provides that nothing in this section shall be interpreted to limit or restrict in any way any existing authority of an inspector general.

SPECIAL NOTE FOR PERIODIC REPORTS REQUIRED BY THE AMERICAN RECOVERY AND REINVESTMENT ACT OF 2009

This Special Note will apply when indicated on the plans, in the proposal, or by addendum.

1.0 DESCRIPTION. This work consists of collecting and reporting data as required by the American Recovery and Reinvestment Act of 2009 (Recovery Act).

2.0 REPORTING. The Contractor shall complete the Monthly Employment Report form, FHWA-1589, for their employees and a separate form for each of their respective subcontractors as well. This form contains information about the number of employees, total hours for employees, total wages for employees, and other information as required by the Recovery Act. The Department will provide the necessary Excel file after the award of the contract. . All remaining submittals shall be no later than the seventh Calendar Day of each month thereafter for the full life of the contract even if no work is performed during any month.

The Contractor shall also need their Data Universal Numbering System or DUNS number as described in the Recovery Act Reporting Requirements. Provide DUNS number before the Notice to Proceed

See the following web link for obtaining a DUNS number:
http://www.whitehouse.gov/omb/grants/duns_num_guide.pdf

3.0 MEASUREMENT AND PAYMENT. The Department will not measure this work for payment and will consider all collection and reporting of data to be incidental to the project. Failure by the Contractor to report the required data as outlined in Section 2.0 shall result in the holding of the Contractor's estimate for payment.

Kentucky Monthly Employment Report (Form: FHWA-1589)

The prime contractor for each project shall be responsible for reporting their firm as well as all subcontractors' data.

Format: The Department (e.g. KYTC) will provide the form FHWA-1589 in MS Excel format, with project information included in the header section (e.g. Boxes 2 through 5), after the award of the contract.
information
Due Date: 7th of each month until September 2015. Include data for work through last full work week of previous month.

Coding Instructions

BOX 1. Report Month: The month and year covered by the report, as mm/yyyy (e.g. "May 2009" would be coded as "05/2009").
BOX 2. **Contracting agency**: Provided by KYTC or Local Agency.
BOX 3. **Federal-aid project number:** Provided by KYTC.
BOX 4. **State project number or identification number**: Provided by KYTC
BOX 5. **Project location**: Provided by KYTC
BOX 6. **Contractor name and address**: The name and address of the contracting or consulting firm shall include the name, street address, city, state, and zip code.
BOX 7. Contractor DUNS number: The unique nine-digit number issued by Dun & Bradstreet. Followed by the optional 4 digit DUNS Plus number. Reported as "999999999.9999" Contractor provided before Notice to Proceed.

BOX 8. **Employment data**: The prime contractor or consultant will report the direct, on-the-project jobs for their workforce *and* the workforce of their subcontractor's active during the reporting month. These jobs data include employees actively engaged in projects who work on the jobsite, in the project office, in the home office or telework from a home or other alternative office location. This also includes any engineering personnel, inspectors, sampling and testing technicians, and lab technicians performing work directly in support of the Recovery Act funded project. This does not include material suppliers such as steel, culverts, guardrail, and tool suppliers. States should include in their reports all direct labor associated with the Recovery Act project such as design, construction, and inspection. The States reports should include their own project labor, including permanent, temporary, and contract project staff. States are asked not to include estimated indirect labor, such as material testing, material production or estimated macro-economic impacts. FHWA will be estimating all indirect labor based on the information provided in this form along with other FHWA data. The form requests specifically:

a. Subcontractor name: The name of each subcontractor or sub-consultant that was active on the project for the reporting month.
b. Employees: The number of project employees on the contractor's or consultant's workforce that month, and the number of project employees for each of the active subcontractors for the reporting month. Do not include material suppliers. Total field at bottom will be automatically calculated and reported as a whole number.
c. Hours: The total hours on the specified project for all employees reported on the contractor's or consultant's project workforce that month, and the total hours for all project employees reported for each of the active subcontractors that month. Total field at bottom will be automatically calculated and reported as a whole number.
d. Payroll: The total dollar amount of wages paid by the contractor or consultant that month for employees on the specified project, and the total dollar amount of wages paid by each of the active subcontractors that month. Payroll only includes wages and does not included overhead or indirect costs. Total field at bottom will be automatically calculated and will be rounded to the nearest whole dollar and reported as a whole number.

BOX 9. **Prepared by:**

a. Name: Indicate the person responsible for preparation of the form. By completing the form the person certifies that they are knowledgeable of the hours worked and employment status for all the employees. Contractors, consultants, and their subs are responsible to maintain data to support the employment form and make it available to the State should they request supporting materials.
b. Date: The date that the contractor completed the employment form. Reported as "mm/dd/yyyy." (e.g. "May 1, 2009" would be coded as "05/01/2009").

Boxes 2-6 filled out by agency before Notice to Proceed | KYTC 05-08-09

MONTHLY EMPLOYMENT REPORT
AMERICAN RECOVERY AND REINVESTMENT ACT

1. Report Month: (mm/yyyy)	2. Contracting Agency State - Kentucky Transportation Cabinet ContID	
3. Federal-Aid Project Number	4. State Project Number or ID Number	5. Project Location: State, County or Federal Region

6. CONTRACTOR NAME AND ADDRESS

Name:
Address:
City: State:
Zip:

7. Contractor/Subcontractor DUNS Number:

8. Employment Data

	EMPLOYEES	HOURS	PAYROLL
Prime Contractor Direct, On-Project Jobs (see guidance for definitions)			
Subcontractor Direct, On-Project Jobs			
Subcontractor Name			
Prime and Subcontractor Totals	0	0	0.00

9. PREPARED BY CEO or Payroll Official:	DATE:
Name: Title:	

Form FHWA-1589

SPECIAL NOTE FOR SIGNS ON PROJECTS BEING FUNDED BY THE AMERICAN RECOVERY AND REINVESTMENT ACT OF 2009

This Special Note will apply where indicated in the proposal. Section references herein are to the Department's 2008 Standard Specifications for Road and Bridge Construction.

1.0 Description. Furnish, install, and maintain Recovery Act signs as shown in the proposal or designated by the Engineer. Two Recovery Act signs will be required for each project. See the sign detail sheet for exact dimensions for the sign.

Speed Limit (MPH)	"A" Dimension	"B" Dimension
65 or Greater	120 inches	84 inches
55 or Less	84 inches	60 inches

2.0 Materials. Recovery Act signs shall be constructed and installed in accordance with signing details included with this note. Conform to Sections 830, 832 and 833.

3.0 Construction. Recovery Act signs should be placed where they can be easily identified with the corresponding projects and in a location that does not conflict with higher priority signs (temporary or permanent), traffic signals or any temporary traffic control device. In no case shall these signs be installed such that it obscures the view of other traffic control devices.

Recovery Act signs shall not be installed at the following locations: Near any traffic control device, roadway structure, exit and entrance ramps, intersections, highway-rail grade crossings, and areas of limited sight distance.

The signs installed on roadways with a speed limit of 65 mph or greater shall be installed using traffic notes for temporary signs on wood posts. All other signs should be installed using two Type II channel posts as shown in the attached detail. Sign bracing will be required as shown in the attached details.

4.0 Measurement. The Department will measure the quantity in square feet. The Department will not measure sign maintenance, posts, mounting, installation or any required bracing for payment and will consider them incidental to this item of work.

5.0 Payment. The Department will make payment for the completed and accepted under the following:

Code	Pay Item	Pay Unit
02562	Signs	Square Foot

3/23/2009

PROJECT FUNDING SOURCE SIGN ASSEMBLY
AMERICAN RECOVERY AND REINVESTMENT ACT
SIGN LAYOUT DETAILS

PROJECT FUNDING SOURCE
SIGN ASSEMBLY

3/23/2009

PROJECT FUNDING SOURCE SIGN ASSEMBLY
AMERICAN RECOVERY AND REINVESTMENT ACT
SIGN LAYOUT DETAILS

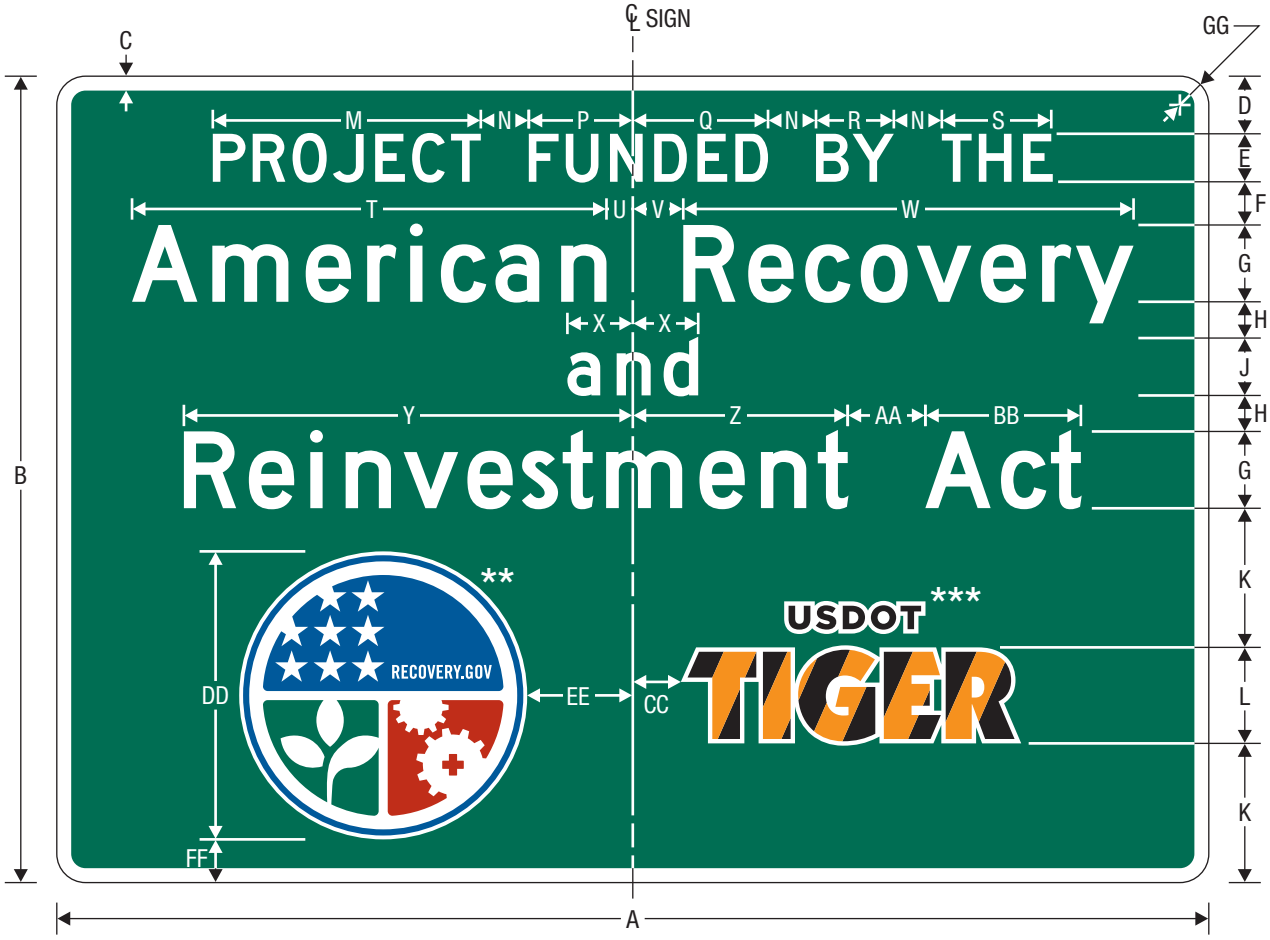

PROJECT FUNDING SOURCE SIGN

NOTE: SIGN SHALL NOT BE INSTALLED WITHOUT PROJECT FUNDING SOURCE PLAQUE (SEE SHEET 3).

Dimensions in inches

A	B	C	D	E	F	G	H	J	K	L	M	N	P
120	84	1.5	6	5 D	4.5	8 D*	3.75	6 D* (4.5 L.C.)	14.5	10	27.917	5	10.831
84	60	1	5	4 C	3.5	6 C*	3	4 D* (3 L.C.)	9.25	7	19.047	4	7.362

Q	R	S	T	U	V	W	X	Y	Z	AA	BB	CC	DD
14.087	8.106	11.556	49.42	2.742	5.258	46.904	6.812	46.76	22.472	8	16.288	5	30
9.484	5.162	7.763	31.722	2.415	3.585	30.552	4.542	30.911	14.737	6	10.175	4	21

EE	FF	GG
11	4.5	3
7.5	2.25	2.25

* Increase character spacing 50%
** See Pictograph page 4
*** See Pictograph page 5

COLORS: LEGEND, BORDER — WHITE (RETROREFLECTIVE)
BACKGROUND — GREEN (RETROREFLECTIVE)

3/23/2009

PROJECT FUNDING SOURCE SIGN ASSEMBLY AMERICAN RECOVERY AND REINVESTMENT ACT SIGN LAYOUT DETAILS

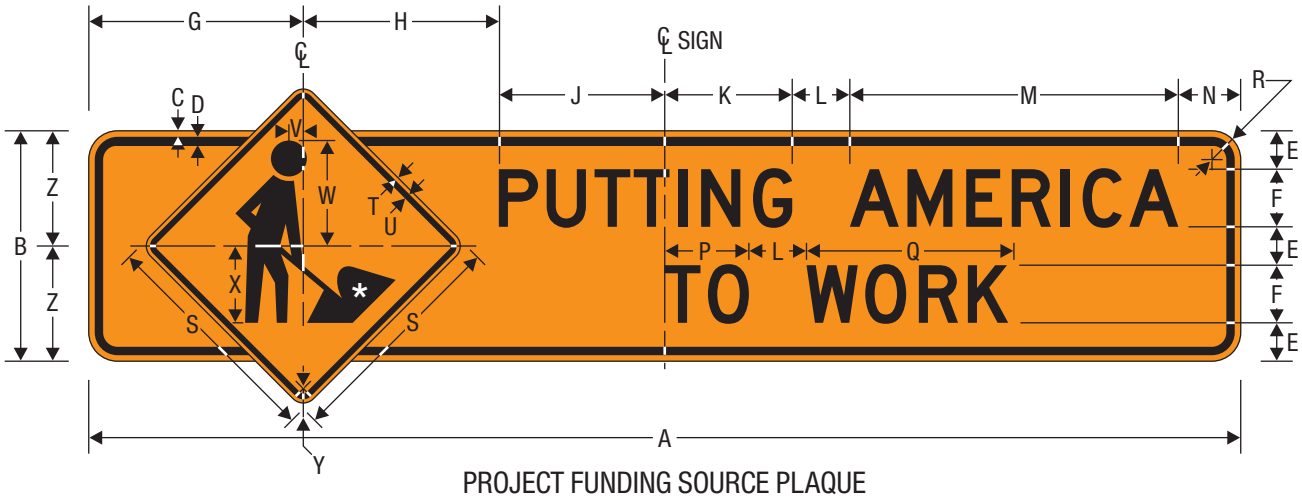

PROJECT FUNDING SOURCE PLAQUE

NOTE: PLAQUE SHALL NOT BE INSTALLED WITHOUT SIGN (SEE SHEET 2).

* See *Standard Highway Signs* Page 6-59 for symbol design.

Dimensions in inches

A	B	C	D	E	F	G	H	J	K	L	M	N	P
120	24	0.625	0.875	4	6 D	22.349	20.370	17.281	13.28	6	34.22	6.5	8.765
84	18	0.375	0.625	3.5	4 D	16.607	15.686	9.707	10.667	4	22.813	5	5.843

Q	R	S	T	U	V	W	X	Y	Z
21.013	3	24	0.375	0.625	1.5	11	8	1.5	12
14.009	2.25	18	0.375	0.625	1	7	6	1.5	9

COLORS: LEGEND, BORDER — BLACK
BACKGROUND — ORANGE (RETROREFLECTIVE)

3/23/2009

PROJECT FUNDING SOURCE SIGN ASSEMBLY
AMERICAN RECOVERY AND REINVESTMENT ACT
SIGN LAYOUT DETAILS

RECOVERY
Vector-Based, Vinyl-Ready Pictograph

COLORS:	LEGEND, OUTLINE	— WHITE (RETROREFLECTIVE)
	BORDER	— BLUE (RETROREFLECTIVE)
	BACKGROUND (UPPER)	— BLUE (RETROREFLECTIVE)
	BACKGROUND (LOWER RIGHT)	— RED (RETROREFLECTIVE)
	BACKGROUND (LOWER LEFT)	— GREEN (RETROREFLECTIVE)

3/23/2009

PROJECT FUNDING SOURCE SIGN ASSEMBLY
AMERICAN RECOVERY AND REINVESTMENT ACT
SIGN LAYOUT DETAILS

USDOT TIGER
Vector-Based, Vinyl-Ready Pictograph

COLORS:	OUTLINE	–	WHITE (RETROREFLECTIVE)
	USDOT LEGEND	–	BLACK
	TIGER DIAGONALS	–	BLACK, ORANGE (RETROREFLECTIVE)

Traffic Notes For Temporary Signs

The Contractor shall use 6 inch x 8 inch (nominal) pressure treated southern pine wood posts to mount the large temporary signs. The posts that are exposed to traffic shall have two (2) holes, three (3”) inches in diameter drilled through each post in a vertical arrangement perpendicular to traffic. The first hole should be four inches (4”) from the ground and the second hole, eighteen inches (18”) from the ground.

A seven-foot (7’) or more clear path should exist between the supporting posts. The bottom edge of the sign panel should have at least seven foot (7') clearance above the ground. Posts shall be embedded a minimum of 48 inches.

Bolt signs to the wood posts using three 5 inch galvanized lag bolts in each post, with galvanized washers on both sides. The top and bottom bolts shall be placed a minimum of 12 inches from the top and bottom edges respectively, with the third bolt centered on the sign.

For additional details see the Federal Highway Administration memorandum HNG-14/SS-25 dated 6/4/91, HNG-14/SS-36 dated 9/3/93 and HNG-14/SS-27 dated 5/15/92.

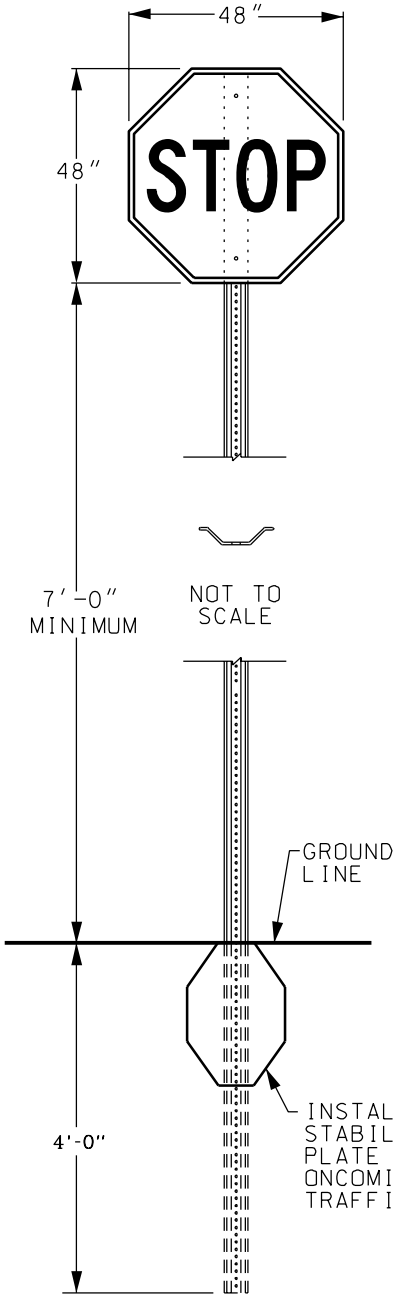

TYPE II
CHANNEL POST
WITH SOIL STABILIZER

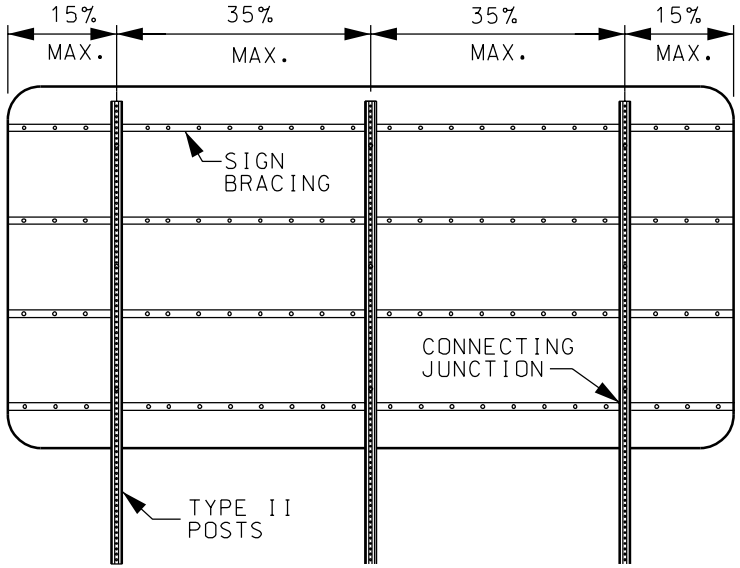

3 POST - BRACING DIAGRAM

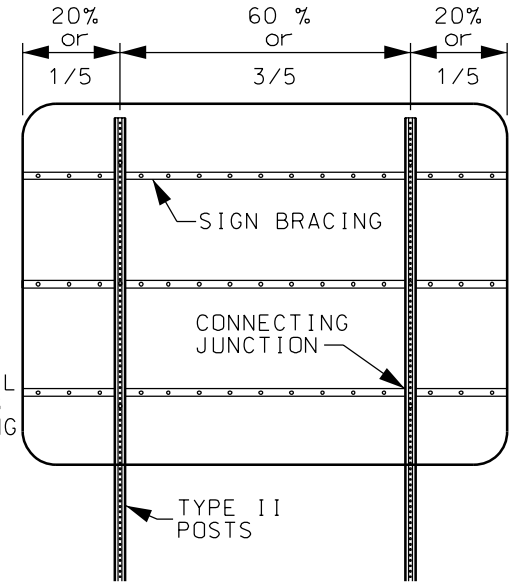

2 POST - BRACING DIAGRAM

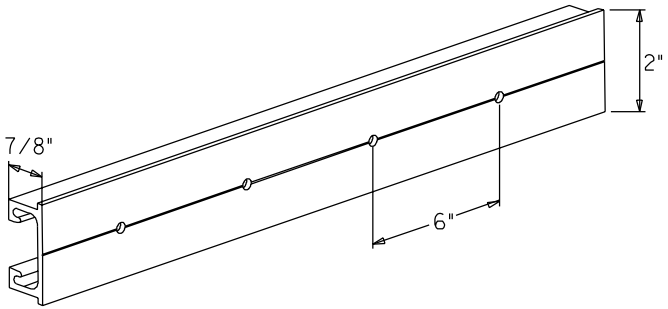

SHEETING SIGN BRACING

NOTE:
ALUMINUM SIGN BRACING
2" MOUNTING SURFACE
x 7/8" DEPTH x 1/8"
NOMINAL WALL THICKNESS

6061-T6 ALUMINUM ALLOY,
PUNCHED WITH 3/16" DIAMETER
HOLES ON 6" CENTERS FOR
ATTACHMENT OF SIGN
SUBSTRATE USING RIVETS

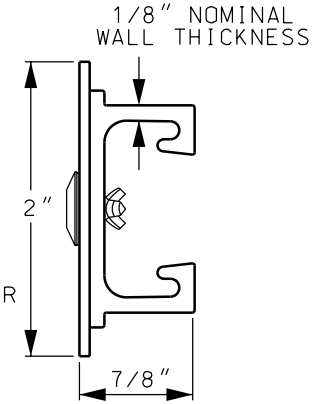

SIGN BRACE

NOTES:
1. VERTICAL SPACING NOT TO EXCEED 36" BETWEEN BRACES OR 12" FROM TOP OR BOTTOMOF SIGN TO FIRST BRACE.

2. MAXIMUM AREA PER CONNECTING JUNCTION =16 SQ. FT.

3. LENGTH OF BRACE TO BE A MINIMUM OF TOTAL SIGN WIDTH LESS 4", NOT TO EXTEND BEYOND RIGHT OR LEFT EDGE OF SIGN.

4. POSTS, BRACING, AND SOIL STABLISHER SHALL BE INCIDENTAL TO SIGNS.

SHEETING SIGN POST AND BRACING DETAIL

SPECIAL NOTES FOR GUARDRAIL

I. DESCRIPTION

All work shall be performed in accordance with the Department's current Standard Specifications and applicable Special Provisions except as hereafter specified. Article references are to the Standard Specifications.

This work shall consist furnishing all equipment, labor, materials, and incidentals for the following: (1) Site Preparation; (2) Furnishing and installing guardrail systems; (3) Maintaining and control traffic; and (4) all other work specified in the Contract.

II. MATERIALS

All materials shall be sampled and tested in accordance with the Department's Sampling Manual and the materials shall be available for sampling a sufficient time in advance of the use of the materials to allow for the necessary time for testing unless otherwise specified in these Notes.

A. Maintain and Control Traffic. See Traffic Control Plan.

B. Seeding and Protection. Use Seed Mixture No. 1.

III. CONSTRUCTION METHODS

A. Maintain and Control Traffic. See Traffic Control Plan.

B. Site Preparation. Prepare the shoulder for the guardrail installation, which includes regrading, reshaping, adding and compacting of suitable materials on the existing shoulders to provide proper template or foundation for the guardrail; removal of all obstructions or any other items; disposal, of waste materials and cleanup. All site preparation shall be as approved or directed by the engineer.

C. Installation of Guardrail systems. Furnish guardrail systems as per Section 719. The shoulder width shall be a minimum of 1 Ft unless otherwise directed by the Engineer. Grade slopes and shoulders as per applicable guardrail standard drawings. Guardrail locations shown on summary and/or drawing is approximate only. The Engineer will determine the exact termini for guardrail installations at time of construction. Construct radii at entrances and road intersections as per applicable Standard Drawings.

The guardrail shall be erected to the lines and grades shown on current standard drawings or as designated by the Engineer. Unless otherwise directed, the guardrail shall be constructed 2' 3" above true theoretical shoulder elevations, or by any method approved by the Engineer which allows the construction of the guardrail to the true grade and prevents apparent sags.

When installing guardrail the blunt end shall NOT be left exposed where it would be hazardous to the public. When it is not practical to complete the construction of the rail or the permanent end treatments first, the Engineer may require a temporary end by connecting at least 25 feet of rail to the last post, and by slightly flaring, and burying the end of the rail completely into the existing shoulder. If left overnight, a drum with bridge panel shall be placed in advance of the guardrail end and maintained during use. The cost of the temporary end, including the barrier and panel, shall be included in the unit price for Guardrail - Single Face.

D. On Site Inspection. Each Contractor submitting a bid for this work shall make a thorough inspection of the site prior to submitting his bid and shall thoroughly familiarize himself with existing conditions so that the work can be expeditiously performed after a contract is awarded. Submission of a bid will be considered evidence of this inspection having been made. The Department will not honor any claims resulting from site conditions.

E. Property Damage. Be responsible for all damage to public and/or private property resulting from his work. Restore all disturbed features in like kind materials and design to the existing or proposed grades, as applicable, at no additional cost to the Department.

F. Utility Clearance. See Utility notes.

G Right of Way Limits. See Right of Way notes.

H. Disposal of Waste. Dispose of all removed concrete, debris, and other waste as per Section 204.03.08. The Department will incur no cost to obtain the disposal sites. The Department will NOT make direct payment for disposal of waste and debris from the project.

IV. METHOD OF MEASUREMENT

A. Maintain and Control Traffic. See Traffic Control Plan.

B. Site preparation. Site preparation will not be measured for payment but shall be incidental to the bid item "Guardrail, Single Face".

V. BASIS OF PAYMENT

A. Maintain and Control Traffic. See Traffic Control Plan.

B. Site Preparation. Payment for site preparation shall be not paid directly. Site Preparation will be incidental to the bid item "Guardrail, Single Face".

TRAFFIC CONTROL PLAN

TRAFFIC CONTROL GENERAL

Except as provided herein, maintain and control traffic in accordance with the current Standard Specifications and the Standard Drawings, current editions. Except for the roadway and traffic control bid items listed, all items of work necessary to maintain and control traffic will be paid at the lump sum bid price to "Maintain and Control Traffic".

Contrary to Section 106.01, traffic control devices used on this project may be new, or used in like new condition, at the beginning of the work and maintained in like new condition until completion of the work.

PROJECT PHASING & CONSTRUCTION PROCEDURES

At the discretion of the Engineer, days and hours may be specified when lane closures will not be allowed.

The Contractor may maintain alternating one way traffic during construction. The clear lane width shall be 8 Feet. If traffic should be stopped due to construction operations, and a school bus on an official run arrives on the scene, the Contractor shall make provisions for the passage of the bus as quickly as possible.

Use flaggers at all times, when traffic is restricted to less than one lane in each direction.

LANE & SHOULDER CLOSURES

Do not leave lane closures in place during non-working hours. Protect partially completed guardrail installations with a shoulder closure during non-working hours.

SIGNS

Contrary to Section 112.04.02 and 112.04.03, Low Shoulder signs will not be measured for payment, but will be incidental to Maintain and Control Traffic. Contrary to section 112.04.02, only long term signs (signs intended to be continuously in place for more than 3 days) will be measured for payment; short term signs (signs intended to be left in place for 3 days or less) will not be measured for payment but will be incidental to Maintain and Control Traffic.

Right-of-Way Certification Form

Revised 5/27/09

☒ **Federal Funded** ☒ **Original**

☐ **State Funded** ☐ **Re-Certification**

This form must be completed and submitted to FHWA with the PS&E package for federal-aid funded Interstate, Appalachia, and Mega projects. This form shall also be submitted to FHWA for **all** federal-aid projects that fall under conditions No. 2 & 3 outlined elsewhere in this form. For all other federal-aid projects, this form shall be completed and retained in the KYTC project file.

Date: **January 12, 2010**

Project #: **KIPDA 1657** County: **OLDHAM**
Item #: Federal #:
Letting Date: **February 26, 2010** **Description of Project:** install new guardrails various locations

Projects that require NO new or additional right-of-way acquisitions and/or relocations

☒ The proposed transportation improvement will be built within the existing rights-of -way and there are no properties to be acquired, individuals and families ("relocatees") to be relocated, or improvements to be removed as a part of this project.

Projects that require new or additional right-of –way acquisitions and/or relocations

☐ Per 23 CFR 635.309, the KYTC hereby certify that all relocatees have been relocated to decent, safe, and sanitary housing or that KYTC has made available to relocatees adequate replacement housing in accordance with the provisions of the current FHWA directive(s) covering the administration of the Highway Relocation Assistance Program **and** that at least one of the following three conditions has been met. **(Check those that apply.)**

☐ 1. All necessary rights-of-way, including control of access rights when applicable, have been acquired including legal and physical possession. Trial or appeal of cases may be pending in court but legal possession has been obtained. There may be some improvements remaining on the right-of-way, but all occupants have vacated the lands and improvements, and KYTC has physical possession and the rights to remove, salvage, or demolish these improvements and enter on all land. **Fair market value has been paid or deposited with the court.**

☐ 2. Although all necessary rights-of-way have not been fully acquired, the right to occupy and to use all rights-of-way required for the proper execution of the project has been acquired. Trial or appeal of some parcels may be pending in court and on other parcels full legal possession has not been obtained, but an Interlocutory Judgment has been granted, the occupants of all lands and improvements have vacated, and KYTC has physical possession and right to remove, salvage, or demolish these improvements. **Fair market value has been paid or deposited with the court for most parcels. Fair market value for all pending parcels will be paid or deposited with the court prior to start of construction. (See note.)**

Note: The KYTC shall re-submit a right-of-way re-certification form for this project prior to the start of construction **(Notice to Proceed)**, verifying that fair market value for all parcels has been paid or deposited with the court.

Right-of-Way Certification Form

☐ 3. The acquisition or right of occupancy and use of a **few** remaining parcels are not complete and/or some parcels still have occupants. However, all remaining occupants have had replacement housing made available to them in accordance with 49 CFR 24.204. The KYTC is hereby requesting authorization to advertise this project for bids and to proceed with physical construction even thought the necessary rights-of-way will not be fully acquired, and/or some occupants will not be relocated, and/or the fair marked value will not be paid or deposited with the court for some parcels at the start of construction. KYTC will fully meet all the requirements outlined in 23 CFR 309(c) (3) and 49 CFR 102(j) and will expedite completion of all acquisitions, relocations, and full payments after construction starts. A full explanation and reason for this request, including identification of each such parcel and dates on which acquisitions, payments, and relocations will be completed, is attached to this certification form for FHWA consideration and approval. **(See note.)**

Note: **The KYTC may request authorization on this basis only in unique and unusual circumstances.** Proceeding to construction of projects on this basis shall be the exception and never become the rule. In all FHWA-approved cases, the KYTC shall make extraordinary efforts to expedite completion of the acquisition, payment for all affected parcels, and the relocation of all relocatees promptly 30 days after start of construction.

Approved: _____ Date 1-12-10
Duane Murner - Oldham County Judge-Executive

Approved: **Ron Geveden** _____ Date **1/12/2010** District ROW Supervisor
Name

Approved: _____ Date 1/19/10 Director of ROW & Utilities
Name or Designee

Approved: _____ Date _____ FHWA, Right-of-Way Officer
Name

Right-of-Way Certification Form

Date: _____

Project #: _____ County: _____
Item #: _____ Federal #: _____
Letting Date: _____

This project has _____ Total number of parcels acquired, and _____ Total number of individual or families relocated, as well as _____ Total number of businesses relocated.

_____ Parcels were acquired by a signed fee simple deed and fair market value has been paid **(Type 1)**

_____ Parcels have been acquired through condemnation and IOJ granted by the court and fair market value has been deposited with the court **(Type 1 certification)**

_____ Parcels have **not** been acquired at this time but can be Re-certified as acquired prior to Notice to Proceed for construction.(*explain below for each parcel*) **(Type 2 certification)**

_____ Parcels have been acquired or have a "right of Entry" but the fair market value has not been paid or has not been posted with the court, and they can not be re-certified prior to construction. (These parcels require an explanation below for each one as well as FHWA approval. **(Type 3 only)**

_____ Relocatees have not been relocated from parcels.
(explain below for each parcel)

Parcel #	Name	Explanation for delayed acquisition, delayed relocation, or delayed payment of fair market value	Proposed date of payment or of relocation

There are _____ billboards and/or _____ cemeteries involved on this project.
There are _____ water or monitoring wells on parcels.

UTILITY NOTES TO BE INCLUDED IN THE PROPOSAL
IMPACT ON CONSTRUCTION

OLDHAM COUNTY
OLDHAM COUNTY GUARDRAIL
LOCAL PROJECT IMPROVEMENTS

KIPDA No: 1657

Utility coordination efforts determined that no significant utility relocation work is required to complete the project. Any work pertaining to these utility facilities are defined in the bid package and are to be carried out as instructed by the Kentucky Transportation Cabinet. The contactor will be responsible for any coordination or adjustments that are discussed or quantified in the proposal.

Utility Information Note

AT&T-KY has service in the vicinity of the construction. However, there is no impact or adjustments required of their services.

SPECIAL CAUTION NOTE – PROTECTION OF UTILITIES

The Contractor will be responsible for contacting all utility facility owners on the subject project to coordinate his activities. The Contractor will coordinate his activities to minimize and, where possible, avoid conflicts with utility facilities. Due to the nature of the work proposed, it is unlikely to conflict with the existing utilities beyond minor facility adjustments. Where conflicts with utility facilities are unavoidable, the Contractor will coordinate any necessary relocation work with the facility owner and Resident Engineer. The Kentucky Transportation Cabinet maintains the right to remove or alter portions of this contract if a utility conflict occurs.

The Kentucky Transportation Cabinet makes no guarantees regarding: the existence of utilities, the location of utilities, the utility companies in the project scope, or the potential for conflicts encountered during construction. Any location of utilities provided herein has been furnished by the facility owners, field inspection, and/or reviewing record drawings. The accuracy of the information provided in undetermined. It will be the contractor's responsibility to locate utilities before excavating. If necessary, the roadway contractor shall determine the exact location and elevation of utilities by hand digging to expose utilities before excavating in the area of a utility.

The Contractor is advised to contact KY 811 one-call system; however, the Contractor should be aware that owners of underground facilities are not required to be members of the KY 811 one-call system. It may be necessary for the Contractor to contact the County Court Clerk to determine what utility companies have facilities in the project area. Note: See attached sheet for Jefferson County Utility Contacts.

Oldham County - Utility Owners

1. Louisville Gas & Electric/KY Utilities
820 West Broadway
Louisville, KY 40202
Trouble Line – 1-800-331-7370 (LGE & KU)
589-3500 (LG&E ONLY)

Contact: Greg Geiser
cell - 502-376-9510
greg.geiser@eon-us.com

2. Louisville Gas & Electric (Gas)
820 West Broadway
Louisville, KY 40202

Contact: Greg Geiser
cell - 502-376-9510
greg.geiser@eon-us.com

3. Louisville Water Company
550 South Third Street
Louisville, KY40202

Contact: Daniel Tegene, PE
502-569-3649
dtegene@lwcky.com

4. AT&T KY
3719 Bardstown Road - 2nd Floor
Louisville, KY40218
502-458-7312

Contact: Morgan Herndon
morgan.herndon@att.com

5. Oldham County Water District
3711 W. Highway 146, P.O. Box 51
Buckner, KY 40010
502-222-1690

Contact: Phillip Ward
phillipward@insightbb.com

6. LaGrange Utilities Commission
203 S. Walnut St.
LaGrange, KY40031
502-222-9325

Contact: John Bennett
luc@insightbb.com

7. Mid - Valley Pipeline Company
4910 Limaburg Road
Burlington, KY 41005
859-371-4469
FAX 866-699-1185

Contact: Edward (Dan) Harden
edharden@sunocologistics.com

8. Shelby Energy Cooperative
P.O. Box 311, 620 Old Finchville Road
Shelbyville, KY 40065
502-633-5900 ext. 527

Contact: David Eubank
davide@shelbyenergy.com

9. Texas Gas Transmission, LLC
3800 Frederica Street
Owensboro, Kentucky 42302
Cell: (270) 485-1152

Contact: Tim Turner
(270) 688-6461
Tim.Turner@bwpmlp.com

10. Insight KY Partners
4701 Commerce Crossings Dr.
Louisville, KY 40229

Contact: Deno Barbour
502-664-7395
barbour.d@insightcom.com

11. Oldham Co. Sewer District
700 W. Jefferson St.
LaGrange, KY 40031
502-225-9477

Contact:

Railroad Companies

1.

C.S.X. Transportation, Inc.
Contacts:
David Hall, KY Liaison, 502-815-1865
Milton Holder – crossings – cell 502-817-2011
John Williams – crossings – cell 502-376-8745, Office 502-364-1133
Joe Malandruco (Florida) – signals 904-245-1160

Oldham County Fiscal Court
Guard Rail Locations
4-30-09
Scale unknown

Mayo Lane

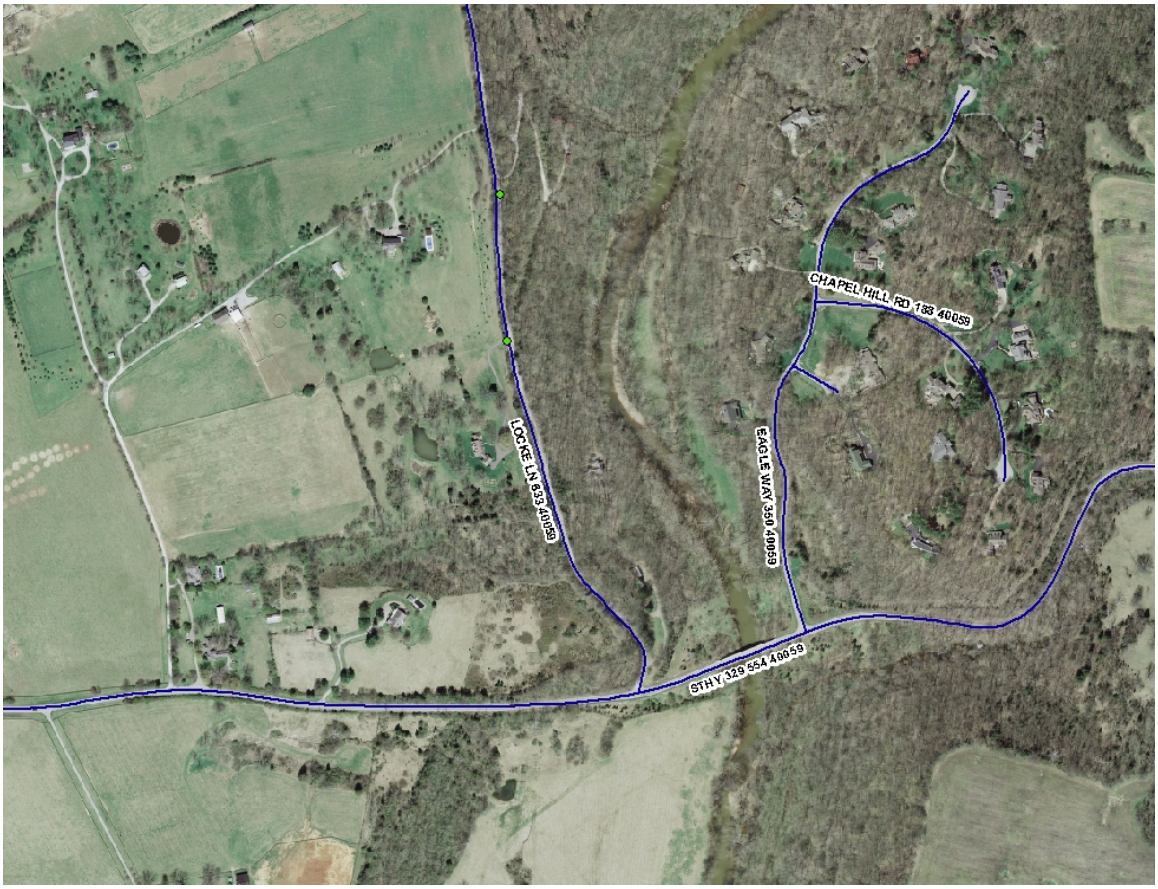

Oldham County Fiscal Court
Guard Rail Locations
4-30-09
Scale unknown

Locke Lane
Two Locations

Oldham County Fiscal Court
Guard Rail Locations
4-30-09
Scale unknown

Mayo Lane

Guardrail Summary

OLDHAM COUNTY

ARRA 3001(394)

Section 1 – Mayo Lane – 2 Type End Treatments (1 East and 1 West) Begin at the box culvert about 100 feet south of the driveway of 2575 Mayo Lane extend North for 87.5 feet on the east side (1 Type 7 End Treatment) and 112.5 on the west side. (1 Type 7 End Treatment)

Section 2 – Locke Lane Part A – (1 Type 7 End Treatment) Starting 385 feet south of the driveway of 3500 Locke Lane (Zubrod Stables) and Extending 187.5 feet on the East side of the road. (1 Type 7 End Treatment)

Section 3 – Locke Lane Part B – (1 Type 7 End Treatment) Begin at 60 feet south of the driveway of 3713 Locke Lane extend 480 feet on the east side to the driveway of 3720 Locke Lane. (1 Terminal Section No. 1)

Section 4 – Eighteen Mile Creek Road Part A – 2 Terminal Section No. 1 (1 East and 1 West) Begin at the driveway for 5107 Eighteen Mile Creek Road and extending East on both sides of the road for about 37.5 feet over the culvert. 75 LF Guardrail Total 2 Type 7 End Treatments (1 East and 1 West)

Section 5 – Eighteen Mile Creek Road Part B – Begin at 407 feet east of the driveway for 4601 Eighteen Mile Creek Road Extend East on both sides of the road for about 37.5 feet over the culvert. 75 LF Guardrail Total. 4 Type 7 End Treatments (2 East and 2 West)

Section 6 – Eighteen Mile Creek Road Part C – Begin at 125 feet west of the driveway for 4301 Eighteen Mile Creek Road Extend West on both sides of the road for about 37.5feet over the culvert. 75 LF Guardrail Total. 4 Type 7 End Treatments (2 East and 2 West)

Section 7 – Eighteen Mile Creek Road Part D – . (1 Type 7 End Treatment) Begin at 20 feet east of the driveway for 3315 Eighteen Mile Creek Road Extend East on the north side of the road for about 37.5 feet over the culvert (1 Type 7 End Treatment) and about 75 feet on the south side of the road (1 Type 7 End Treatment)

Section 8 – Eighteen Mile Creek Road Part E – (1 Type 7 End Treatment) Begin at 20 feet east of the driveway for 3700 Eighteen Mile Creek Road Extend East on the North side of the road for about 37.5 feet over the culvert (1 Type 7 End Treatment)

Guardrail Summary

OLDHAM COUNTY

ARRA 3001(394)

Section 9 – Eighteen Mile Creek Road Part F – Begin at 40 feet east of the driveway for 3701 Eighteen Mile Creek Road Extend East on both sides of the road for about 37.5 feet over the culvert. 75 LF Guardrail Total 4 Type 7 End Treatments (2 East and 2 West)

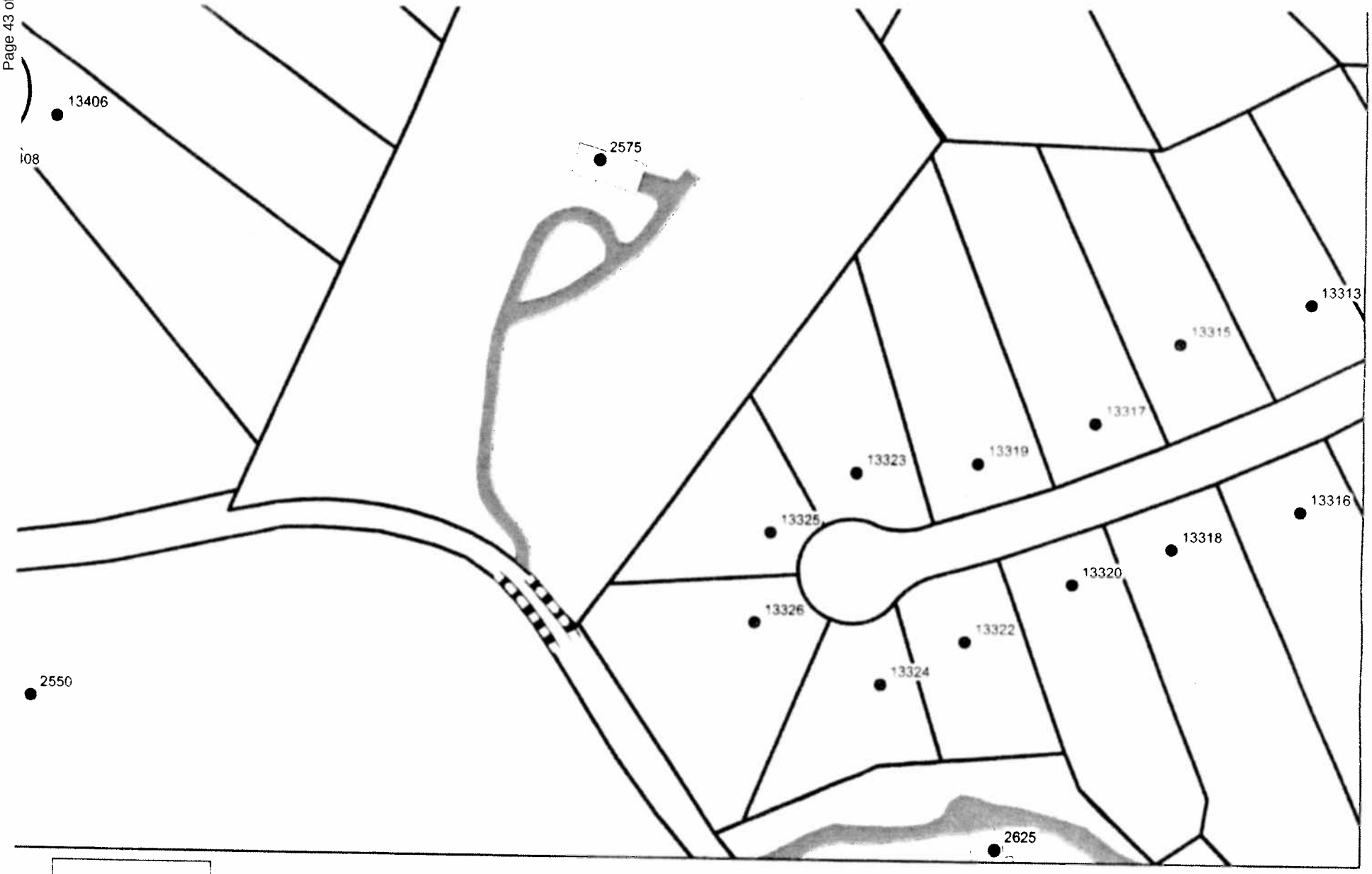

Guardrail
Driveway
Structure

75 0 150 Feet

ARRA Guardrail Installation Project

Section 1-Mayo Ln

GIS data provided by Oldham Geographic Information Consortium

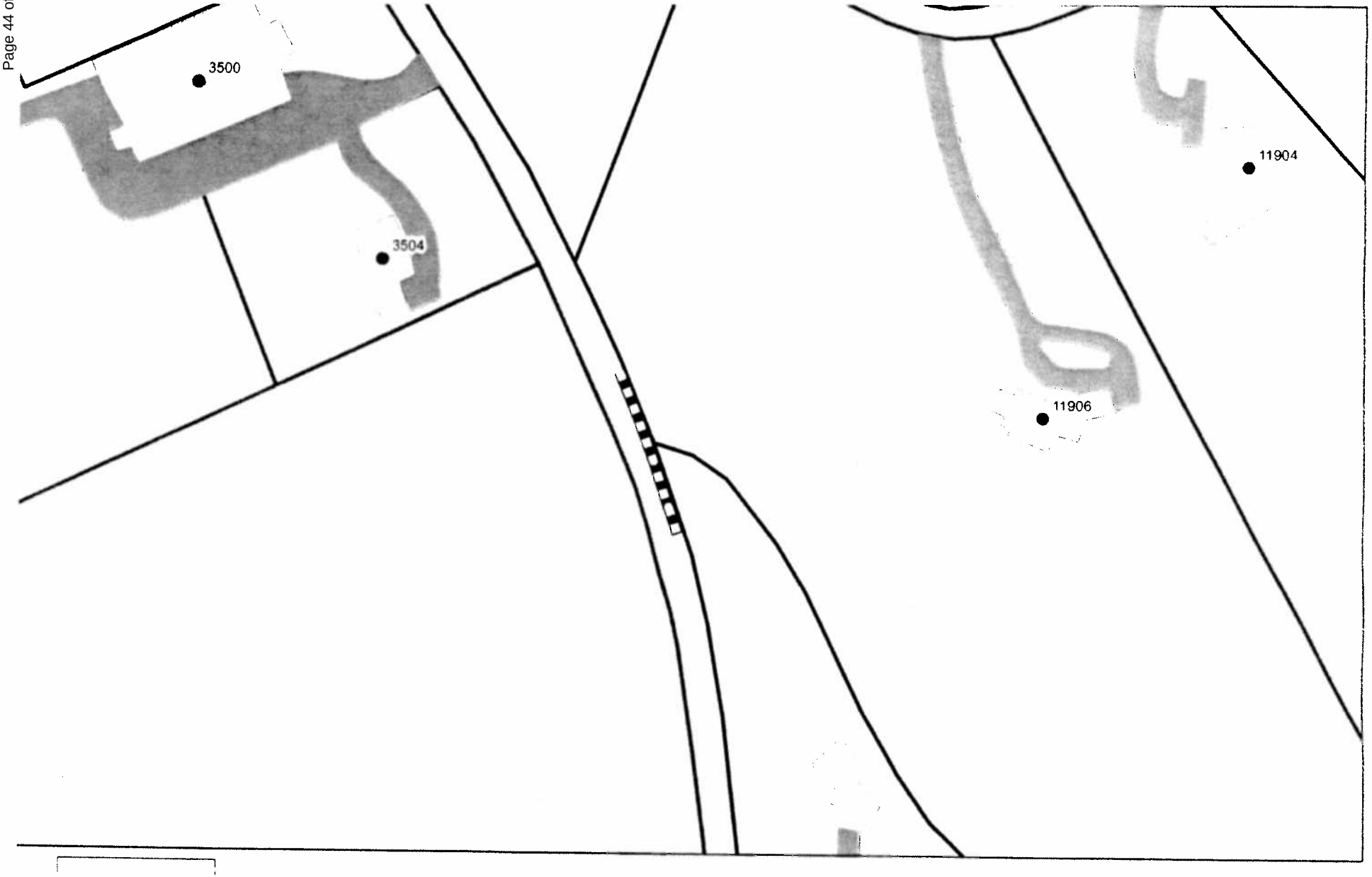

Guardrail
Driveway
Structure

75 0 150 Feet

ARRA Guardrail Installation Project

Section 2-Locke Ln Part A

GIS data provided by Oldham Geographic Information Consortium

Guardrail
Driveway
Structure

75 0 150 Feet

ARRA Guardrail Installation Project

Section 3-Locke Ln Part B

GIS data provided by Oldham Geographic Information Consortium

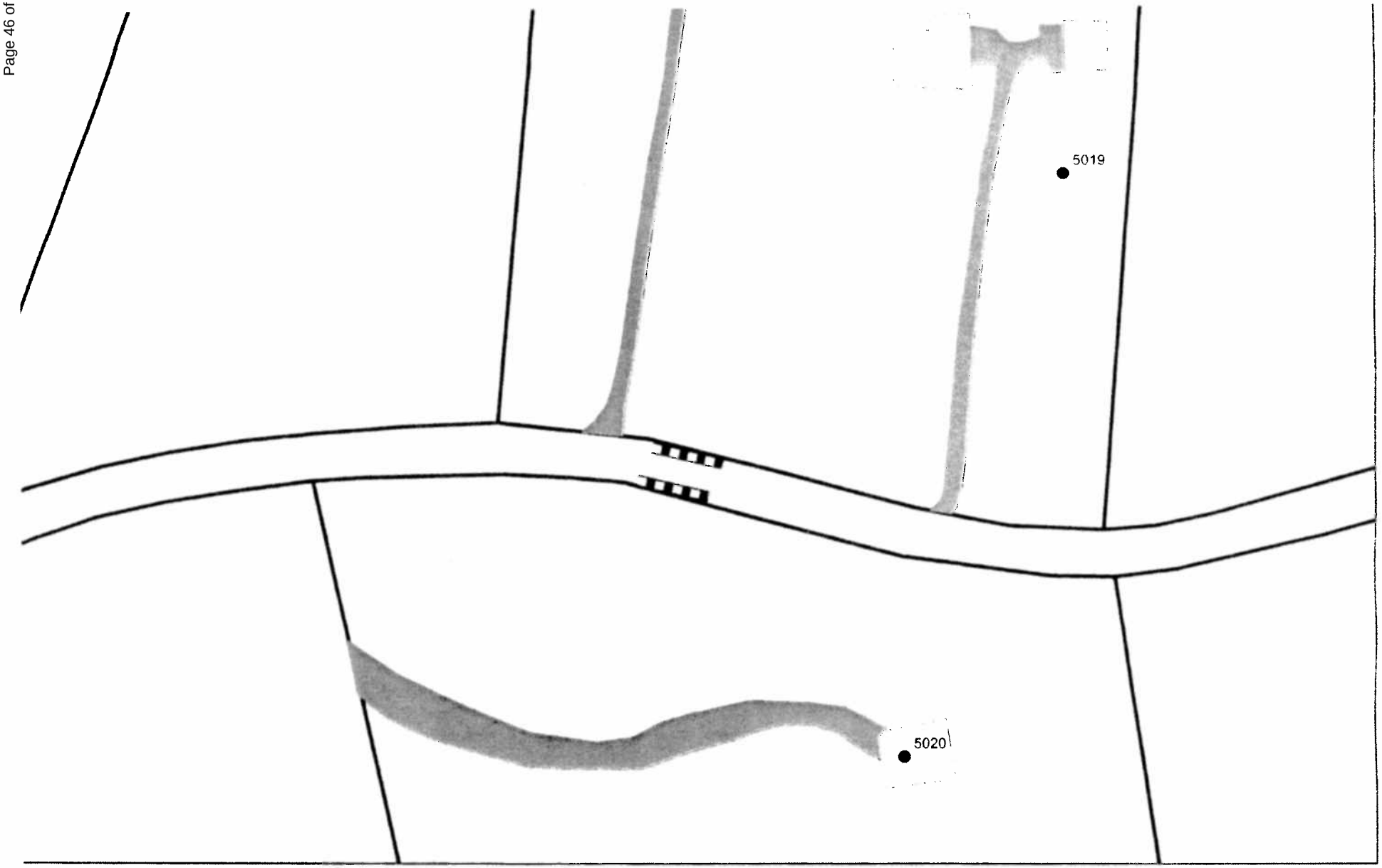

Guardrail
Driveway
Structure

40 0 80 Feet

ARRA Guardrail Installation Project

Section 4-Eighteenmile Creek Rd-Part A

GIS data provided by Oldham Geographic Information Consortium

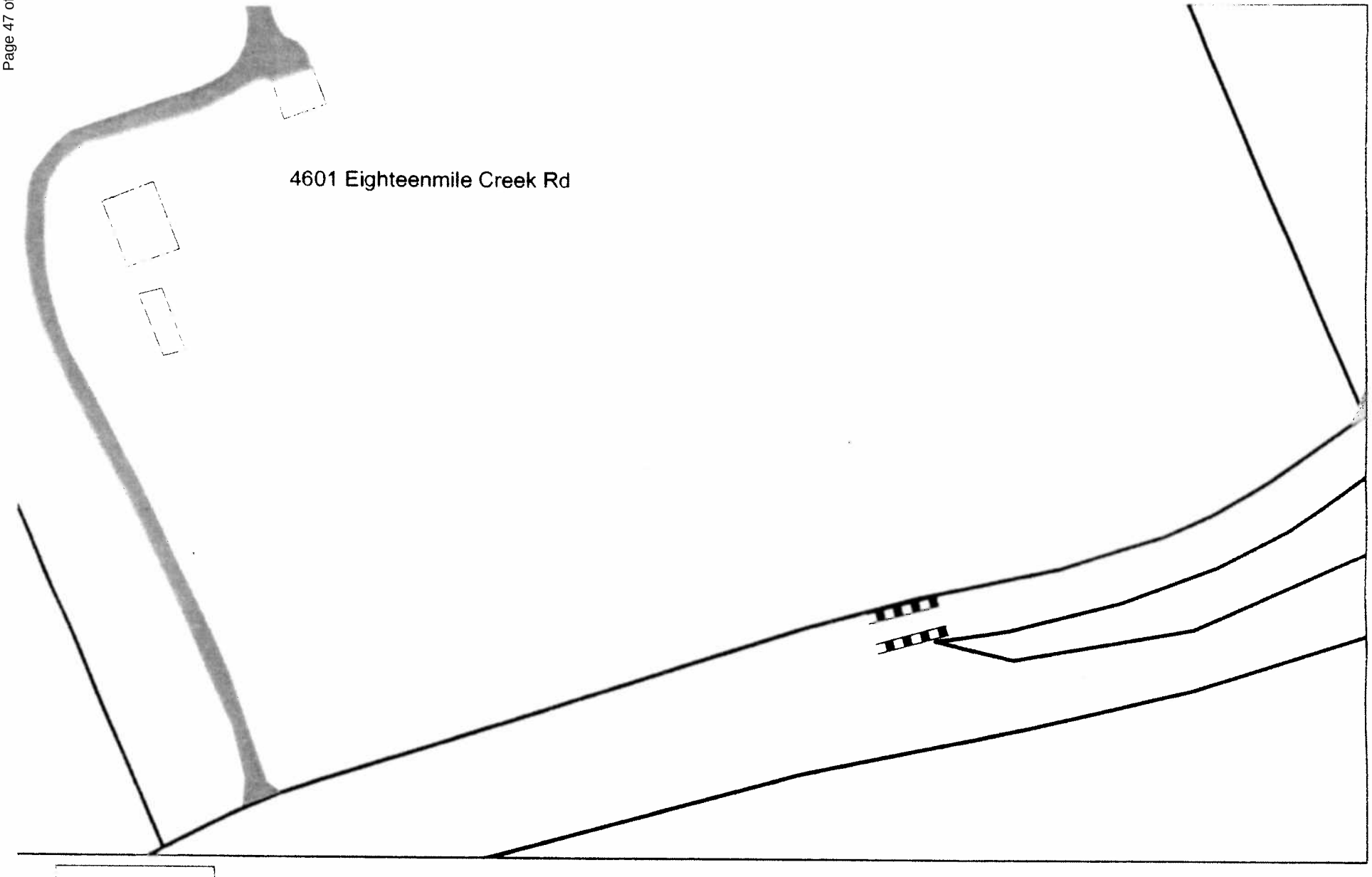

Guardrail
Driveway
Structure

40 0 80 Feet

ARRA Guardrail Installation Project

Section 5-Eighteenmile Creek Rd-Part B

GIS data provided by Oldham Geographic Information Consortium

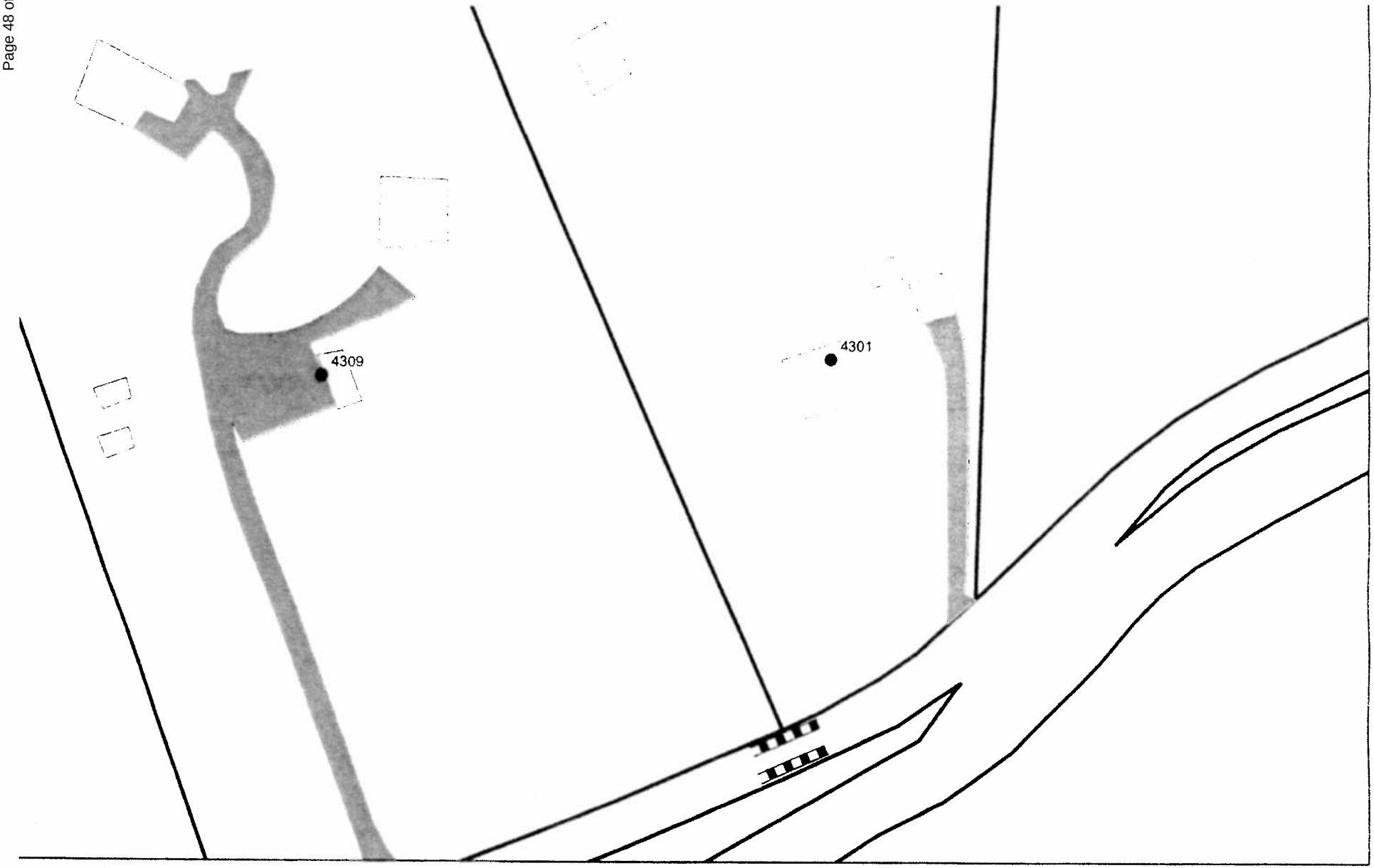

Guardrail
Driveway
Structure

40 0 80 Feet

ARRA Guardrail Installation Project

Section 6-Eighteenmile Creek Rd-Part C

GIS data provided by Oldham Geographic Information Consortium

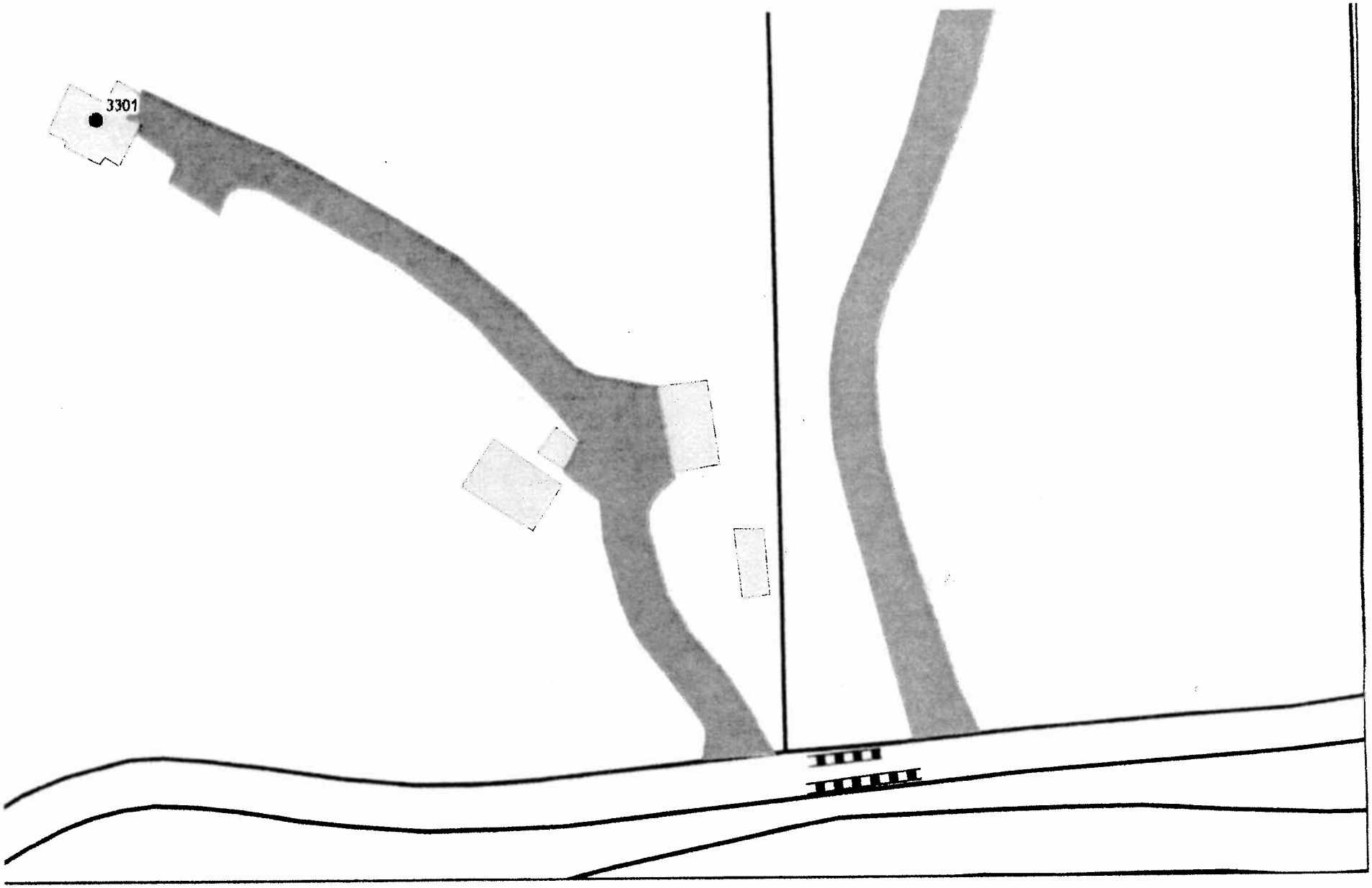

Guardrail
Driveway
Structure

40 0 80 Feet

ARRA Guardrail Installation Project

Section 7-Eighteenmile Creek Rd-Part D

GIS data provided by Oldham Geographic Information Consortium

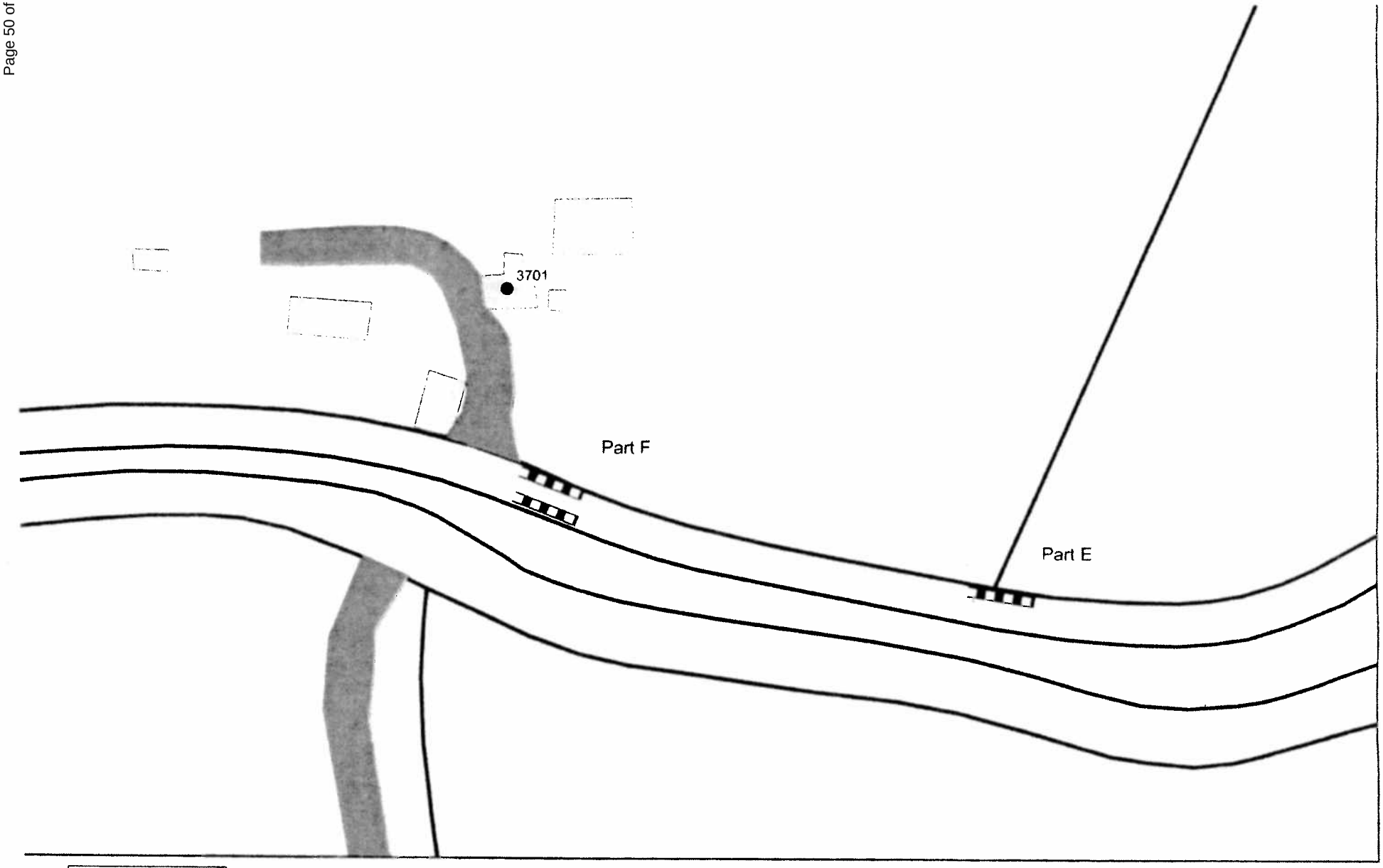

Guardrail
Driveway
Structure

45 0 90 Feet

ARRA Guardrail Installation Project

Section 8 & 9-Eighteenmile Creek Rd
Parts E& F

GIS data provided by Oldham Geographic Information Consortium

PART II

SPECIFICATIONS AND STANDARD DRAWINGS

SPECIFICATIONS REFERENCE

Any reference in the plans or proposal to the *Standard Specifications for Road and Bridge Construction, Edition of 2004,* and *Standard Drawings, Edition of 2000* are superseded by *Standard Specifications for Road and Bridge Construction, Edition of 2008* and *Standard Drawings, Edition of 2003 with the 2008 Revision.*

Supplemental Specifications to The Standard Specifications for Road and Bridge Construction, 2008 Edition

(Effective with the January 22, 2010 Letting)

SUBSECTION: **REVISION:**	101.02 Abbreviations. Insert the following abbreviation and text into the section: KEPSC Kentucky Erosion Prevention and Sediment Control
SUBSECTION: **REVISION:**	101.03 Definitions. Replace the definition for Specifications – *Special Provisions* with the following: Additions and revisions to the Standard and Supplemental Specifications covering conditions peculiar to and individual project.
SUBSECTION: **REVISION:**	102.07.01 General. Replace the first sentence with the following: Submit the Bid Proposal on forms furnished on the Department internet website (http://transportation.ky.gov/contract/), including the Bid Packet and disk created from the Expedite Bidding Program.
SUBSECTION: **REVISION:**	102.07.02 Computer Bidding. Replace the first paragraph with the following: Subsequent to ordering a Bid Proposal for a specific project, use the Department's Expedite Bidding Program on the internet website of the Department of Highways, Division of Construction Procurement (http://transportation.ky.gov/contract/). Download the bid file from the Department's website to prepare a Bid Proposal for submission to the Department. Include the completed Bid Packet produced by the Expedite Bidding Program and submit it along with the disk created by said program. Replace the second paragraph with the following: In case of a dispute, the printed Bid Proposal and bid item sheets created by the Expedite Bidding Program take precedence over any bid submittal.
SUBSECTION: **REVISION:**	102.08 Irregular Bid Proposals. Replace point four of the first paragraph with the following: 4) fails to submit a disk created from the Expedite Bidding Program. Replace point one of the second paragraph with the following: 1) when the Bid Proposal is on a form other than that furnished by the Department or printed from other than the Expedite Bidding Program, or when the form is altered or any part is detached; or
SUBSECTION: **REVISION:**	102.11 Withdrawal or Revision of Bid Proposals. Replace the paragraph with the following: A bidder may withdraw or revise a Bid Proposal after depositing the Bid Proposal with the Department, provided the Department receives the request for such withdrawal or revision in writing before the time set for opening Bid Proposals.
SUBSECTION: **REVISION:**	103.02 Award of Contract. Replace the first sentence of the third paragraph with the following: The Department will normally award the Contract within 10 working days after the date of receiving Bid Proposals unless the Department deems it best to hold the Bid Proposals of any or all bidders for a period not to exceed 60 calendar days for final disposition of award.

Supplemental Specifications to The Standard Specifications for Road and Bridge Construction, 2008 Edition

(Effective with the January 22, 2010 Letting)

SUBSECTION: **REVISION:**	105.12 Final Inspection and Acceptance of Work. Insert the following paragraphs after the first paragraph: Notify the Engineer when all electrical items are complete. A notice of the electrical work completion shall be made in writing to the Contractor. Electrical items will be inspected when the electrical work is complete and are not subject to waiting until the project as a whole has been completed. The Engineer will notify the Division of Traffic Operations within 3 days that all electrical items are complete and ready for a final inspection. A final inspection will be completed within 90 days after the Engineer notifies the Division of Traffic Operations of the electrical work completion. Energize all electrical items prior to notifying the Engineer that all electrical items are complete. Electrical items must remain operational until the Division of Traffic Operations has inspected and accepted the electrical portion of the project. Payment for the electrical service is the responsibility of the Contractor from the time the electrical items are energized until the Division of Traffic Operations has accepted the work. Complete all corrective work within 90 calendar days of receiving the original electrical inspection report. Notify the Engineer when all corrective work is complete. The Engineer will notify the Division of Traffic Operations that the corrective work has been completed and the project is ready for a follow-up inspection. Upon re-inspection, if additional corrective work is required, complete within the same 90 calendar day allowance. The Department will not include time between completion of the corrective work and the follow up electrical inspection(s). The 90 calendar day allowance is cumulative regardless of the number of follow-up electrical inspections required. The Department will assume responsibility for the electrical service on a project once the Division of Traffic Operations gives final acceptance of the electrical items on the project. The Department will also assume routine maintenance of those items. Any damage done to accepted electrical work items by other Contractors shall be the responsibility of the Prime Contractor. The Department will not be responsible for repairing damage done by other contractors during the construction of the remaining project. Failure to complete the electrical corrective work within the 90 calendar day allowance will result in penalties assessed to the project. Penalties will be assessed at ½ the rate of liquidated damages established for the contract. Replace the following in the second sentence of the second paragraph: Replace Section 213 with Section 212. Delete the fifth paragraph from the section.
SUBSECTION: **REVISION:**	105.13 Claim Resolution Process. Replace the last sentence of the 3. Bullet with the following: If the Contractor did not submit an as-bid schedule at the Pre-Construction Meeting or a written narrative in accordance with Subsection 108.02, the Cabinet will not consider the claim for delay. Delete the last paragraph from the section.
SUBSECTION: **REVISION:**	106.10 Field Welder Certification Requirements. Insert the following sentence before the first sentence of the first paragraph: All field welding must be performed by a certified welder unless otherwise noted.

Supplemental Specifications to The Standard Specifications for Road and Bridge Construction, 2008 Edition

(Effective with the January 22, 2010 Letting)

SUBSECTION: **REVISION:**	108.02 Progress Schedule. Insert the following prior to the first paragraph: Specification 108.02 applies to all Cabinet projects except the following project types: • Right of Way Mowing and/or Litter Removal • Waterborne Paint Striping • Projects that contain Special Provision 82 • Projects that contain the Special Note for CPM Scheduling Insert the following paragraph after paragraph two: Working without the submittal of a Written Narrative is violation of this specification and additionally voids the Contractor's right to delay claims. Insert the following paragraph after paragraph six: The submittal of bar chart or Critical Path Method schedule does not relieve the Contractor's requirement to submit a Written Narrative schedule. Insert the following at the beginning of the first paragraph of A) Written Narrative.: Submit the Written Narrative Schedule using form TC 63-50 available at the Division of Construction's website (http://www.transportation.ky.gov/construction/ResCenter/ResCenter.htm). Replace Part A) Written Narrative 1. And 2. with the following: 1. Provide a description that includes how the Contractor will sequence and stage the work, how the Contractor plans to maintain and control traffic being specific and detailed, and what equipment and crew sizes are planned to execute the work. 2. Provide a list of project milestones including, if applicable, winter shut-downs, holidays, or special events. The Contractor shall describe how these milestones and other dates effect the prosecution of the work. Also, include start date and completion date milestones for the contract, each project if the contract entails multiple projects, each phase of work, site of work, or segment of work as divided in the project plans, proposal, or as subdivided by the Contractor.
SUBSECTION: **REVISION:**	110.01 Mobilization. Replace paragraph three with the following: Do not bid an amount for Mobilization that exceeds 5 percent of the sum of the total amounts bid for all items in the Bid Proposal, excluding Mobilization, Demobilization, and contingent amounts established for adjustments and incentives. The Department will automatically adjust any Bid Proposals that are in excess of this amount down to 5 percent to compare Bid Proposals and award the Contract. The Department will award a Contract for the actual amount bid when the amount bid for Mobilization is less than 5 percent, or the Department will award the Contract for the adjusted bid amount of 5 percent when the amount bid for Mobilization is greater than 5 percent. If any errors in unit bid prices for other Contract items in a Contractor's Bid Proposal are discovered after bid opening and such errors reduce the total amount bid for all other items, excluding Mobilization, Demobilization, and contingent amounts established for adjustments and incentives, so that the percent bid for Mobilization is larger than 5 percent, the Department will adjust the amount bid for Mobilization to 5 percent of the sum of the corrected total bid amounts.

Supplemental Specifications to The Standard Specifications for Road and Bridge Construction, 2008 Edition

(Effective with the January 22, 2010 Letting)

SUBSECTION: **REVISION:**	110.02 Demobilization. Replace the third paragraph with the following: Bid an amount for Demobilization that is a minimum of $1,000 or 1.5 percent of the sum of the total amounts bid for all other items in the Bid Proposal, excluding Mobilization, Demobilization, and contingent amounts established for adjustments and incentives. The Department will automatically adjust any Bid Proposal that is less than this amount up to $1,000 or 1.5 percent to compare Bid Proposals and award the Contract. The Department will award a Contract for the actual amount bid when the amount bid for demobilization exceeds 1.5 percent, or the Department will award the Contract for the adjusted bid amount when the amount bid for demobilization is less than the minimum of $1,000 or less than 1.5 percent of the sum of the total amounts bid for all other items in the Bid Proposal, excluding Mobilization, Demobilization, and contingent amounts established for adjustments and incentives.
SUBSECTION: **REVISION:**	110.04 Payment. Insert the following paragraph following the demobilization payment schedule (4th paragraph): The Department will withhold an amount equal to $1,000 for demobilization, regardless of the schedule listed above. The $1,000 withheld for demobilization will be paid when the final estimate is paid.
SUBSECTION: **REVISION:**	112.03.01 General Traffic Control. Replace paragraph three with the following: All flaggers shall be trained in current MUTCD flagging procedures. Proof of training must be available for review at the Department's request. Flagging credentials must be current within the last 5 years.
SUBSECTION: **PART:** **REVISION:**	112.03.11 Temporary Pavement Markings. B) Placement and Removal of Temporary Striping. Replace the 2nd sentence of the fist paragraph with the following: On interstates and parkways, and other roadways approved by the State Highway Engineer, install pavement striping that is 6 inches in width.
SUBSECTION: **REVISION:**	112.03.12 Project Traffic Coordinator (PTC). Add the following at the end of the subsection: After October 1, 2008 the Department will require the PTC to have successfully completed the applicable qualification courses. Personnel that have not successfully completed the applicable courses by that date will not be considered qualified. Prior to October 1, 2008, conform to Subsection 108.06 A) and ensure the designated PTC has sufficient skill and experience to properly perform the task.
SUBSECTION: **REVISION:**	112.03.15 Non-Compliance of Maintain and Control of Traffic. Add the following section: **112.03.15 Non-Compliance of Maintain and Control of Traffic.** It is the Contractor's responsibility to conform to the traffic control requirements in the TCP, Proposal, plan sheets, specifications, and the Manual on Uniform Traffic Control Devices. Unless specified elsewhere in the contract, a penalty will be assessed in the event of non-compliance with Maintain and Control of Traffic requirements. These penalties will be assessed when the Contractor fails to correct a situation or condition of non-compliance with the contract traffic control requirements after being notified by the Engineer. The calculation of accrued penalties for non-compliance will be based upon the date/time of notification by the Engineer. The amount of the penalty assessed for non-compliance will be determined based upon the work zone duration, as defined by the MUTCD, and will be the greatest of the different calculation methods indicated below:

Supplemental Specifications to The Standard Specifications for Road and Bridge Construction, 2008 Edition
(Effective with the January 22, 2010 Letting)

	A) Long-term stationary work that occupies a location more than 3 days. Correct the non-compliant issue within 24 hours from initial notification by the Engineer. If the issue is not corrected within 24 hours from the initial notification, a penalty for non-compliance will be assessed on a daily basis beginning from the initial notification of non-compliance. The Contractor will be assessed a $1,000 daily penalty or the amount equal to the contract liquidated damages in Section 108.09, whichever of the 2 is greater. The penalty for non-compliance will escalate as follows for continued non-compliance after the initial notification. 3 Days after Notification $1,500 daily penalty or 1.5 times the contract liquidated damages daily charge rate in Section 108.09, whichever is greater. 7 Days after Notification $2,000 daily penalty or double the contract liquidated damages daily charge rate in Section 108.09, whichever is greater. B) Intermediate-term stationary work that occupies a location more than one daylight period up to 3 days, or nighttime work lasting more than 1 hour. Correct the non-compliant issue within 4 hours from initial notification by the Engineer. If the issue is not corrected within 4 hours from notification, a penalty for non-compliance will be assessed on an hourly basis beginning from the initial notification of non-compliance. The penalty for non-compliance will be assessed at $200 per hour. C) Short-term stationary is daytime work that occupies a location for more than 1 hour within a single daylight period. Correct the non-compliant issue within 1 hour from initial notification by the Engineer. If the issue is not corrected within 1 hour from notification, a penalty for non-compliance will be assessed on an hourly basis beginning from the initial notification of non-compliance. The penalty for non-compliance will be assessed at $200 per hour. If the Contractor remains in violation of the Maintain and Control of Traffic requirements, or if the Department determines it to be in the public's interest, work will be suspended in accordance with Section 108.08 until the deficiencies are corrected. The Department reserves the right to correct deficiencies by any means available and charge the Contractor for labor, equipment, and material costs incurred in emergency situations.
SUBSECTION: **REVISION:**	206.03.02 Embankment Replace the last paragraph with the following: When rock roadbed is specified, construct the upper 2 feet of the embankment according to Subsection 204.03.09 A).

Supplemental Specifications to The Standard Specifications for Road and Bridge Construction, 2008 Edition

(Effective with the January 22, 2010 Letting)

SUBSECTION: **REVISION:**	213.03.03 Inspection and Maintenance. Insert the following paragraph after the second paragraph: When the Contractor is required to obtain the KPDES permit, it is their responsibility to ensure compliance with the inspection and maintenance requirements of the permit. The Engineer will perform verification inspections a minimum of once per month and within 7 days of a ½ inch or greater rainfall event. The Engineer will document these inspections using Form TC 63-61 A. The Engineer will provide copies of the inspection only when improvements to the BMP's are required. Verification inspections performed by the Engineer do not relieve the Contractor of any responsibility for compliance with the KPDES permit. Initiate corrective action within 24 hours of any noted deficiency and complete the work within 5 days.
SUBSECTION: **PART:** **REVISION:**	213.03.05 Temporary Control Measures. E) Temporary Seeding and Protection. Replace the first paragraph with the following: Apply an Annual Rye seed mix at a rate of 100 pounds per acre during the months of March through August. In addition to the Annual Rye, add 10 pounds of German Foxtail-Millet (Setaria italica), when performing temporary seeding during the months of June through August. During the months of September through February, apply Winter Wheat or Rye Grain at a rate of 100 pounds per acre. Obtain the Engineer's approval prior to the application of the seed mixture.
SUBSECTION: **PART:** **REVISION:**	213.03.05 Temporary Control Measures. F) Temporary Mulch. Replace the last sentence with the following: Place temporary mulch to an approximate 2-inch loose depth (2 tons per acre) and anchor it into the soil by mechanically crimping it into the soil surface or applying tackifier to provide a protective cover. Regardless of the anchoring method used, ensure the protective cover holds until disturbance is required or permanent controls are in installed.
SUBSECTION: **REVISION:**	303.05 Payment. Replace the second paragraph of the section with the following: The Department will make payment for Drainage Blanket-Type II (ATDB) according to the Lot Pay Adjustment Schedule for Specialty Mixtures in Section 402.
SUBSECTION: **PART:** **REVISION:**	401.02.04 Special Requirements for Dryer Drum Plants. F) Production Quality Control. Replace the first sentence with the following: Stop mixing operations immediately if, at any time, a failure of the automatic electronic weighing system of the aggregate feed, asphalt binder feed, or water injection system control occurs.

Supplemental Specifications to The Standard Specifications for Road and Bridge Construction, 2008 Edition

(Effective with the January 22, 2010 Letting)

SUBSECTION: 401.02.04 Special Requirements for Dryer Drum Plants.
REVISION: Add the following:

Part G) **Water Injection System.** Provided each system has prior approval as specified in Subsection 402.01.01, the Department will allow the use of water injection systems for purposes of foaming the asphalt binder and lowering the mixture temperature for production of Warm Mix Asphalt (WMA).

Ensure the equipment for water injection meets the following requirements:

1) Injection equipment computer controls are automatically coupled to the plants controls (manual operation is not permitted);
2) Injection equipment has variable controls that introduce water ratios based on production rates of mixtures;
3) Injects water into the flow of asphalt binder prior to contacting the aggregate;
4) Provides alarms on the water injection system that operate when the flow of water is interrupted or deviates from the prescribed water rate.

SUBSECTION: 401.03.01 Preparation of Mixtures.
REVISION: Replace the last sentence of the second paragraph with the following:

Do not use asphalt binder while it is foaming in a storage tank.

SUBSECTION: 401.03.01 Preparation of Mixtures.
REVISION: Replace the third paragraph and Mixing and Laying Temperature table with the following:

Maintain the temperature of the component materials and asphalt mixture within the ranges listed in the following table:

MIXING AND LAYING TEMPERATURES (°F)

Material		Minimum	Maximum
Aggregates		240	330
Aggregates used with Recycled Asphalt Pavement (RAP)		240	—
Asphalt Binders	PG 64-22	230	330
	PG 76-22	285	350
Asphalt Mixtures at Plant (Measured in Truck)	PG 64-22 HMA	250	330
	PG 76-22 HMA	310	350
	PG 64-22 WMA	230	275
	PG 76-22 WMA	250	300
Asphalt Mixtures at Project (Measured in Truck When Discharging)	PG 64-22 HMA	230	330
	PG 76-22 HMA	300	350
	PG 64-22 WMA	210	275
	PG 76-22 WMA	240	300

SUBSECTION: 402.01 Description.
REVISION: Replace the paragraph with the following:

Provide the process control and acceptance testing of all classes and types of asphalt mixtures which may be furnished either as hot mix asphalt (HMA) or warm mix asphalt (WMA) produced with water injection systems.

Supplemental Specifications to The Standard Specifications for Road and Bridge Construction, 2008 Edition

(Effective with the January 22, 2010 Letting)

SUBSECTION REVISION:

402.01.01 Warm Mix Asphalt (WMA) Evaluation and Approval.
Add the following subsection:

402.01.01 Warm Mix Asphalt (WMA) Evaluation and Approval.
The Department will evaluate trial production of WMA by use of a water injection system provided the system is installed according to the manufacturer's requirements and satisfies the requirements of Section 401. Evaluation will include production and placement of WMA to demonstrate adequate mixture quality including volumetric properties and density by Option A as specified in Subsection 402.03.02 D). Do not place WMA for evaluation on Department projects. Provided production and placement operations satisfy the applicable quality levels, the Department will approve WMA production on Department projects using the water injection system as installed on the specific asphalt mixing plant evaluated.

SUBSECTION: REVISION:

402.05.02 Asphalt Mixtures and Mixtures With RAP.
Replace Subsection Title as below:

402.05.02 Asphalt Mixtures, HMA and WMA, Including Mixtures With RAP.

SUBSECTION: REVISION:

402.05.02 Asphalt Mixtures, HMA and WMA, Including Mixtures With RAP.
Replace the paragraph with the following:

The Department will pay for the mixture at the Contract unit bid price and apply a Lot Pay Adjustment for each lot placed based on the degree of compliance with the specified tolerances. Using the appropriate Lot Pay Adjustment Schedule, the Department will assign a pay value for the applicable properties within each sublot and average the sublot pay values to determine the pay value for a given property for each lot. The Department will apply the Lot Pay Adjustment for each lot to a defined unit price of $50.00 per ton. The Department will calculate the Lot Pay Adjustment using all possible incentives and disincentives but will not allow the overall pay value for a lot to exceed 1.00.

SUBSECTION: PART: REVISION:

402.05.02 Asphalt Mixtures, HMA and WMA, Including Mixtures With RAP.
C) Conventional and RAP Mixtures Placed on Shoulders.
Replace title with the following:

HMA, WMA, and RAP Mixtures Placed on Shoulders.

SUBSECTION: PART: REVISION:

402.05.02 Asphalt Mixtures, HMA and WMA, Including Mixtures With RAP.
D) Conventional and RAP Mixtures Placed Monolithically as Asphalt Pavement Wedge.
Replace the title with the following:

HMA, WMA, and RAP Mixtures Placed Monolithically as Asphalt Pavement Wedge.

SUBSECTION: PART: TABLES: REVISION:

402.05.02 Asphalt Mixtures, HMA and WMA, Including Mixtures With RAP.
Lot Pay Adjustment Schedule, Compaction Option A, Base and Binder Mixtures
VMA
Replace the VMA table with the following:

VMA

Pay Value	Deviation From Minimum
1.00	• min. VMA
0.95	0.1-0.5 below min.
0.90	0.6-1.0 below min.
(1)	> 1.0 below min.

Supplemental Specifications to The Standard Specifications for Road and Bridge Construction, 2008 Edition

(Effective with the January 22, 2010 Letting)

SUBSECTION: 402.05.02 Asphalt Mixtures, HMA and WMA, Including Mixtures With RAP.
PART: Lot Pay Adjustment Schedule, Compaction Option A, Surface Mixtures
TABLES: VMA
REVISION: Replace the VMA table with the following:

VMA	
Pay Value	Deviation From Minimum
1.00	• min. VMA
0.95	0.1-0.5 below min.
0.90	0.6-1.0 below min.
(1)	> 1.0 below min.

SUBSECTION: 402.05.02 Asphalt Mixtures, HMA and WMA, Including Mixtures With RAP.
PART: Lot Pay Adjustment Schedule, Compaction Option B Mixtures
TABLE: VMA
REVISION: Replace the VMA table with the following:

VMA	
Pay Value	Deviation From Minimum
1.00	• min. VMA
0.95	0.1-0.5 below min.
0.90	0.6-1.0 below min.
(2)	> 1.0 below min.

SUBSECTION: 403.03.03 Preparation of Mixture.
PART: C) Mix Design Criteria.
NUMBER: 1) Preliminary Mix Design.
REVISION: Replace the last two sentences of the paragraph and table with the following:

Complete the volumetric mix design at the appropriate number of gyrations as given in the table below for the number of 20-year ESAL's. The Department will define the relationship between ESAL classes, as given in the bid items for Superpave mixtures, and 20-year ESAL ranges as follows:

		Number of Gyrations		
Class	**ESAL's (millions)**	$N_{initial}$	N_{design}	N_{max}
2	< 3.0	6	50	75
3	3.0 to < 30.0	7	75	115
4	≥ 30.0	8	100	160

SUBSECTION: 403.03.09 Leveling and Wedging, and Scratch Course.
PART: A) Leveling and Wedging.
REVISION: Replace the first sentence of the first paragraph with the following:

Conform to the gradation requirements (control points) of AASHTO M 323 for base, binder, or surface as the Engineer directs.

SUBSECTION: 403.03.09 Leveling and Wedging, and Scratch Course.
PART: B) Scratch Course.
REVISION: Replace the second sentence of the first paragraph with the following:

Conform to the gradation requirements (control points) of AASHTO M 323 for base, binder, or surface as the Engineer directs.

Supplemental Specifications to The Standard Specifications for Road and Bridge Construction, 2008 Edition

(Effective with the January 22, 2010 Letting)

SUBSECTION: **REVISION:**	407.01 DESCRIPTION. Replace the first sentence of the paragraph with the following: Construct a pavement wedge composed of a hot-mixed or warm-mixed asphalt mixture.
SUBSECTION: **REVISION:**	409.01 DESCRIPTION. Replace the first sentence of the paragraph with the following: Use reclaimed asphalt pavement (RAP) from Department projects or other approved sources in hot mix asphalt (HMA) or warm mix asphalt (WMA) provided mixture requirements are satisfied.
SUBSECTION: **REVISION:**	410.01 DESCRIPTION. Delete the second sentence of the paragraph.
SUBSECTION: **REVISION:**	410.03.01 Corrective Work. Replace the last sentence of the paragraph with the following: Provide a final surface comparable to the adjacent pavement that does not require corrective work in respect to texture, appearance, and skid resistance.
SUBSECTION: **PART:** **NUMBER:** **REVISION:**	410.03.02 Ride Quality. B) Requirements. 1) Category A. Replace the last sentence of the first paragraph with the following: At the Department's discretion, a pay deduction of $1200 per 0.1-lane-mile section may be applied in lieu of corrective work.
SUBSECTION: **PART:** **NUMBER:** **REVISION:**	410.03.02 Ride Quality. B) Requirements. 2) Category B. Replace the second and third sentence of the first paragraph with the following: When the IRI is greater than 90 for a 0.1-mile section, perform corrective work, or remove and replace the pavement to achieve the specified IRI. At the Department's discretion, a pay deduction of $750 per 0.1-lane-mile section may be applied in lieu of corrective work.
SUBSECTION: **REVISION:**	410.05 PAYMENT. Add the following sentence to the end of the first paragraph: The sum of the pay value adjustments for ride quality shall not exceed $0 for the project as a whole.
SUBSECTION: **REVISION:**	413.05.02 CL3 SMA BASE 1.00D PG76-22. Insert the following sentence between the first and second sentence of the first paragraph: The Department will calculate the Lot Pay Adjustment using all possible incentives and disincentives but will not allow the overall pay value for a lot to exceed 1.00.

Supplemental Specifications to The Standard Specifications for Road and Bridge Construction, 2008 Edition

(Effective with the January 22, 2010 Letting)

SUBSECTION: 413.05.02 CL3 SMA BASE 1.00D PG 76-22.
TABLE: JOINT DENSITY TABLE
REVISION: Replace the joint density table with the following:

LANE DENSITY	
Pay Value	Test Result (%)
1.05	95.0-96.5
1.00	93.0-94.9
0.95	92.0-92.9 or 96.6-97.0
0.90	91.0-91.9 or 97.1-97.5
(1)	< 91.0 or > 97.5

SUBSECTION: 413.05.03 CL3 SMA SURF 0.50A PG76-22 and CL3 SMA SURF 0.38A PG76-22.
REVISION: Insert the following sentence between the first and second sentence of the first paragraph:

The Department will calculate the Lot Pay Adjustment using all possible incentives and disincentives but will not allow the overall pay value for a lot to exceed 1.00.

SUBSECTION: 413.05.03 CL3 SMA SURF 0.50A PG76-22 and CL3 SMA SURF 0.38A PG76-22.
TABLE: JOINT DENSITY TABLE
REVISION: Replace the joint density table with the following:

DENSITY		
Pay Value	Lane Density Test Result (%)	Joint Density Test Result (%)
1.05	95.0-96.5	92.0-96.0
1.00	93.0-94.9	90.0-91.9
0.95	92.0-92.9 or 96.6-97.0	89.0-89.9 or 96.1-96.5
0.90	91.0-91.9 or 97.1-97.5	88.0-88.9 or 96.6-97.0
0.75	----	< 88.0 or > 97.0
(1)	< 91.0 or > 97.5	----

SUBSECTION: 501.05.02 Ride Quality.
REVISION: Add the following sentence to the end of the first paragraph:

The sum of the pay value adjustments for the ride quality shall not exceed $0 for the project as a whole.

SUBSECTION: 505.03.04 Detectable Warnings.
REVISION: Replace the first sentence with the following:

Install detectable warning pavers at all sidewalk ramps and on all commercial entrances according to the Standard Drawings.

Supplemental Specifications to The Standard Specifications for Road and Bridge Construction, 2008 Edition

(Effective with the January 22, 2010 Letting)

SUBSECTION: **REVISION:**	505.04.04 Detectable Warnings. Replace the paragraph with the following: The Department will measure the quantity in square feet. All retrofit applications for maintenance projects will require the removal of existing sidewalks to meet the requirements of the standard drawings applicable to the project. The cost associated with the removal of the existing sidewalk will be incidental to the detectable warnings bid item or incidental to the bid item for the construction of the concrete sidewalk unless otherwise noted.
SUBSECTION: **REVISION:**	505.05 PAYMENT. Add the following to the bid item table: Code — Pay Item — Pay Unit 23158ES505 — Detectable Warnings — Square Foot
SUBSECTION: **REVISION:**	509.01 DESCRIPTION. Replace the second paragraph with the following: The Department may allow the use of similar units that conform to the National Cooperative Highway Research Program (NCHRP) 350 Test Level 3 (TL-3) requirements and the typical features depicted by the Standard Drawings. Obtain the Engineers approval prior to use. Ensure the barrier wall shape, length, material, drain slot dimensions and locations typical features are met and the reported maximum deflection is 3 feet or less from the NCHRP 350 TL-3 for Test 3 – 11 (pickup truck impacting at 60 mph at a 25-degree angle.)
SUBSECTION: **REVISION:**	601.03.02 Concrete Producer Responsibilities. Add the following to the first paragraph: If a concrete plant becomes unqualified during a project and there are no other qualified plants in the region, the Department will provide qualified personnel to witness and ensure the producer follows the required specifications. The Department will assess the Contractor a $100 per hour charge for this service.
SUBSECTION: **REVISION:**	606.02.11 Coarse Aggregate. Replace with the following: Conform to Section 805, size No. 8 or 9-M.
SUBSECTION: **REVISION:**	609.04.06 Joint Sealing. Replace Subsection 601.04 with the following: Subsection 606.04.08.
SUBSECTION: **REVISION:**	609.05 Payment. Replace the Pay Unit for Joint Sealing with the following: See Subsection 606.05.
SUBSECTION: **REVISION:**	701.03.06 Initial Backfill. Replace the first sentence of the last paragraph with the following: When the Contract specifies, perform quality control testing to verify compaction according to KM 64-512.

Supplemental Specifications to The Standard Specifications for Road and Bridge Construction, 2008 Edition

(Effective with the January 22, 2010 Letting)

SUBSECTION: 701.03.08 Testing of Pipe.
REVISION: Replace and rename the subsection with the following:

701.03.08 Inspection of Pipe. The engineer will visually inspect all pipe. The Department will require camera/video inspection on a minimum of 50 percent of the linear feet of all installed pipe structures. Conduct camera/video inspection according to KM 64-114. The pipe to be installed under pavement will be selected first. If the total linear feet of pipe under pavement is less than 50 percent of the linear feet of all pipe installed, the Engineer will randomly select installations from the remaining pipe structures on the project to provide for the minimum inspection requirement. The pipe will be selected in complete runs (junction-junction or headwall-headwall) until the total linear feet of pipe to be inspected is at least 50 percent of the total linear feet of all installed pipe on the project.

Unless the Engineer directs otherwise, schedule the inspections no sooner than 30 days after completing the installation and completion of earthwork to within 1 foot of the finished subgrade. When final surfacing conflicts with the 30-day minimum, conduct the inspections prior to placement of the final surface. The contractor must ensure that all pipe are free and clear of any debris so that a complete inspection is possible.

Notify the Engineer immediately if distresses or locations of improper installation are discovered. When camera testing shows distresses or improper installation in the installed pipe, the Engineer may require additional sections to be tested. Provide the video and report to the Engineer when testing is complete in accordance with KM 64-114.

Pipes that exhibit distress or signs of improper installation may necessitate repair or removal as the Engineer directs. These signs include, but are not limited to: deflection, cracking, joint separation, sagging or other interior damage. If corrugated metal or thermoplastic pipes exceed the deflection and installation thresholds indicated in the table below, provide the Department with an evaluation of each location conducted by a Professional Engineer addressing the severity of the deflection, structural integrity, environmental conditions, design service life, and an evaluation of the factor of safety using Section 12, "Buried Structures and Tunnel Liners," of the AASHTO LRFD Bridge Design Specifications. Based on the evaluation, the Department may allow the pipe to remain in place at a reduced unit price as shown in the table below. Provide 5 business days for the Department to review the evaluation. When the pipe shows deflection of 10 percent or greater, remove and replace the pipe. When the camera/video or laser inspection results are called into question, the Department may require direct measurements or mandrel testing.

The Cabinet may elect to conduct Quality Assurance verifications of any pipe inspections.

SUBSECTION: 701.04.07 Testing.
REVISION: Replace and rename the subsection with the following:

701.04.07 Pipeline Video Inspection. The Department will measure the quantity in linear feet along the pipe invert of the structure inspected. When inspection above the specified 50 percent is performed due to a disagreement or suspicion of additional distresses and the Department is found in error, the Department will measure the quantity as Extra Work according to Subsection 104.03. However, if additional distresses or non-conformance is found, the Department will not measure the additional inspection for payment.

SUBSECTION: 701.05 PAYMENT.
REVISION: Add the following pay item to the list of pay items:

Code	Pay Item	Pay Unit
23131ER701	Pipeline Video Inspection	Linear Foot

Supplemental Specifications to The Standard Specifications for Road and Bridge Construction, 2008 Edition

(Effective with the January 22, 2010 Letting)

SUBSECTION: 701.05 PAYMENT
TABLE: PIPE DEFLECTION DETERMINED BY CAMERA TESTING
REVISION: Replace this table with the following table and note:

PIPE DEFLECTION	
Amount of Deflection (%)	Payment
0.0 to 5.0	100% of the Unit Bid Price
5.1 to 9.9	50% of the Unit Bid Price [(1)]
10 or greater	Remove and Replace

[(1)] *Provide Structural Analysis as indicated above. Based on the structural analysis, pipe may be allowed to remain in place at the reduced unit price.*

SUBSECTION: 701.05 PAYMENT
TABLE: PIPE DEFLECTION DETERMINED BY MANDREL TESTING
REVISION: Delete this table.

SUBSECTION: 713.02.01 Paint.
REVISION: Replace with the following:

Conform to Section 842 and Section 846.

SUBSECTION: 713.03 CONSTRUCTION.
REVISION: Replace the first sentence of the second paragraph with the following:

On interstates and parkways, and other routes approved by the State Highway Engineer, install pavement striping that is 6 inches in width.

SUBSECTION: 713.03.03 Paint Application.
REVISION: Replace the second paragraph with the following table:

Material	Paint Application Rate	Glass Beads Application Rate
4 inch waterborne paint	Min. of 16.5 gallons/mile	Min. of 6 pounds/gallon
6 inch waterborne paint	Min. of 24.8 gallons/mile	Min. of 6 pounds/gallon
6 inch durable waterborne paint	Min. of 36 gallons/mile	Min. of 6 pounds/gallon

SUBSECTION: 713.03.04 Marking Removal.
REVISION: Replace the last sentence of the paragraph wit the following:

Vacuum all marking material and removal debris concurrently with the marking removal operation.

SUBSECTION: 713.05 PAYMENT.
REVISION: Insert the following codes and pay items below the Pavement Striping – Permanent Paint:

Code	Pay Item	Pay Unit
23159EN	Durable Waterborne Marking – 6 IN W	Linear Foot
23160EN	Durable Waterborne Marking – 6 IN Y	Linear Foot

SUBSECTION: 714.03 CONSTRUCTION.
REVISION: Insert the following paragraph at the end of the third paragraph:

Use Type I Tape for markings on bridge decks, JPC pavement and JPC intersections. Thermoplastic should only be used for markings on asphalt pavement.

Supplemental Specifications to The Standard Specifications for Road and Bridge Construction, 2008 Edition

(Effective with the January 22, 2010 Letting)

SUBSECTION: **REVISION:**	714.03.07 Marking Removal. Replace the third sentence of the paragraph with the following: Vacuum all marking material and removal debris concurrently with the marking removal operation.
SUBSECTION: **REVISION:**	716.01 DESCRIPTION. Insert the following after the first sentence: Energize lighting as soon as it is fully functional and ready for inspection. Ensure that lighting remains operational until the Division of Traffic Operations has provided written acceptance of the electrical work.
SUBSECTION: **REVISION:**	716.02.01 Roadway Lighting Materials. Replace the third sentence of the paragraph with the following: Submit for material approval an electronic file of descriptive literature, drawings, and any requested design data.
SECTION: **REVISION:**	717 – THERMOPLASTIC INTERSECTION MARKINGS. Replace the section name with the following: INTERSECTION MARKINGS.
SUBSECTION: **REVISION:**	717.01 DESCRIPTION: Replace the paragraph with the following: Furnish and install thermoplastic or Type I tape intersection markings (Stop Bars, Crosswalks, Turn Arrows, etc.) Thermoplastic markings may be installed by either a machine applied, screed extrusion process or by applying preformed thermoplastic intersection marking material.
SUBSECTION: **REVISION:**	717.02 MATERIALS AND EQUIPMENT. Insert the following subsection: 717.02.06 Type I Tape. Conform to Section 836.
SUBSECTION: **REVISION:**	717.03.03 Application. Insert the following part to the subsection: B) Type I Tape Intersection Markings. Apply according to the manufacturer's recommendations. Cut all tape at pavement joints when applied to concrete surfaces.
SUBSECTION: **PART:** **REVISION:**	717.03.05 Proving Period. A) Requirements. Insert the following to this section: 2) Type I Tape. During the proving period, ensure that the pavement marking material shows no signs of failure due to blistering, excessive cracking, bleeding, staining, discoloration, oil content of the pavement materials, drippings, chipping, spalling, poor adhesion to the pavement, loss of retroreflectivity, vehicular damage, and normal wear. Type I Tape is manufactured off site and warranted by the manufacturer to meet certain retroreflective requirements. As long as the material is adequately bonded to the surface and shows no signs of failure due to the other items listed in Subsection 714.03.06 A) 1), retroreflectivity readings will not be required. In the absence of readings, the Department will accept tape based on a nighttime visual observation.

Supplemental Specifications to The Standard Specifications for Road and Bridge Construction, 2008 Edition

(Effective with the January 22, 2010 Letting)

SUBSECTION: 717.03.06 Marking Removal.
REVISION: Replace the third sentence of the paragraph with the following:

Vacuum all marking material and removal debris concurrently with the marking removal operation.

SUBSECTION: 717.05 PAYMENT.
REVISION: Insert the following bid item codes:

Code	Pay Unit	Pay Item
06563	Pave Marking – R/R X Bucks 16 IN	Linear Foot
20782NS714	Pave Marking Thermo – Bike	Each
23251ES717, 23264ES717	Pave Mark TY I Tape X-Walk, Size	Linear Foot
23252ES717, 23265ES717	Pave Mark TY I Tape Stop Bar, Size	Linear Foot
23253ES717	Pave Mark TY I Tape Cross Hatch	Square Foot
23254ES717	Pave Mark TY I Tape Dotted Lane Extension	Linear Foot
23255ES717	Pave Mark TY I Tape Arrow, Type	Each
23268ES717-23270ES717		
23256ES717	Pave Mark TY I Tape- ONLY	Each
23257ES717	Pave Mark TY I Tape- SCHOOL	Each
23266ES717	Pave Mark TY 1 Tape R/R X Bucks-16 IN	Linear Foot
23267ES717	Pave Mark TY 1 Tape-Bike	Each

SUBSECTION: 805.01 GENERAL.
REVISION: Replace the second paragraph with the following:

The Department's List of Approved Materials includes the Aggregate Source List, the list of Class A and Class B Polish-Resistant Aggregate Sources, and the Concrete Restriction List.

SUBSECTION: 805.04 CONCRETE.
REVISION: Replace the "AASHTO T 160" reference in first sentence of the third paragraph with "KM 64-629"

SUBSECTION: 805.15 GRADATION ACCEPTANCE OF NON-SPECIFICATION COARSE AGGREGATE.
TABLE: AGGREGATE SIZE USE
PART: Cement Concrete Structures and Incidental Construction
REVISION: Replace "9-M for Waterproofing Overlays" with "8 or 9-M for Waterproofing Overlays"

Supplemental Specifications to The Standard Specifications for Road and Bridge Construction, 2008 Edition

(Effective with the January 22, 2010 Letting)

SUBSECTION: 805.15 GRADATION ACCEPTANCE OF NON-SPECIFICATION COARSE AGGREGATE.
REVISION: Replace the "SIZES OF COARSE AGGREGATES" table in with the following:

SIZES OF COARSE AGGREGATES

	Sieve	AMOUNTS FINER THAN EACH LABORATORY SIEVE (SQUARE OPENINGS) PERCENTAGE BY WEIGHT															
Aggregate Size	Nominal [3] Maximum Aggregate Size	4 inch	3 1/2 inch	3 inch	2 1/2 inch	2 inch	1 1/2 inch	1 inch	3/4 inch	1/2 inch	3/8 inch	No. 4	No. 8	No. 16	No. 30	No. 100	No. 200
1	3 ½ inch	100	90-100		25-60		0-15		0-5								
2	2 ½ inch			100	90-100	35-70	0-15		0-5								
23	2 inch			100		40-90		0-15		0-5							
3	2 inch				100	90-100	35-70	0-15		0-5							
357	2 inch				100	95-100		35-70		10-30		0-5					
4	1 ½ inch					100	90-100	20-55	0-15		0-5						
467	1 ½ inch					100	95-100		35-70		10-30	0-5					
5	1 inch						100	90-100	20-55	0-10	0-5						
57	1 inch						100	95-100		25-60		0-10	0-5				
610	1 inch						100	85-100		40-75		15-40					
67	3/4 inch							100	90-100		20-55	0-10	0-5				
68	3/4 inch							100	90-100		30-65	5-25	0-10	0-5			
710	3/4 inch							100	80-100		30-75	0-30					
78	1/2 inch								100	90-100	40-75	5-25	0-10	0-5			
8	3/8 inch									100	85-100	10-30	0-10	0-5			
9-M	3/8 inch									100	75-100	0-25	0-5				
10[2]	No. 4										100	85-100				10-30	
11[2]	No. 4										100	40-90	10-40			0-5	
DENSE GRADED AGGREGATE [1]	3/4 inch							100	70-100		50-80	30-65			10-40		4-13
CRUSHED STONE BASE [1]	1 ½ inch				100		90-100		60-95		30-70	15-55			5-20		0-8

[1] *Gradation performed by wet sieve KM 64-620 or AASHTO T 11/T 27.*
[2] *Sizes shown for convenience and are not to be considered as coarse aggregates.*
[3] *Nominal Maximum Size is the largest sieve on the gradation table for an aggregate size on which any material may be retained.*

Note: The Department will allow blending of same source/same type aggregate when precise procedures are used such as cold feed, belt, or equivalent and combining of sizes or types of aggregate using the weigh hopper at concrete plants or controlled feed belts at the pugmill to obtain designated sizes.

Supplemental Specifications to The Standard Specifications for Road and Bridge Construction, 2008 Edition

(Effective with the January 22, 2010 Letting)

SUBSECTION: 805.16 SAMPLING AND TESTING.
REVISION: Replace the "AASHTO T 160" method with the "KM 64-629" method for the Concrete Beam Expansion Test.

Replace the "ASTM D 3042" method with the "KM 64-625" method for Insoluble Residue.

SUBSECTION: 810.04.01 Coating Requirements.
REVISION: Replace the "Subsection 806.07" references with "Subsection 806.06"

SUBSECTION: 810.06.01 Polyvinyl Chloride (PVC) Pipe.
PART: B) Culvert and Entrance Pipe.
REVISION: Replace the title with the following:

B) Culvert Pipe, Storm Sewer, and Entrance Pipe.

SUBSECTION: 837.03 APPROVAL.
REVISION: Replace the last sentence with the following:

The Department will sample and evaluate for approval each lot of thermoplastic material delivered for use per contract prior to installation of the thermoplastic material. Do not allow the installation of thermoplastic material until it has been approved by the Division of Materials. Allow the Department a minimum of 10 working days to evaluate and approve thermoplastic material.

SUBSECTION: 837.03.01 Composition.
REVISION: COMPOSITION Table:

Replace

Lead Chromate	0.0 max.	4.0 min.

with

Heavy Metals Content	Comply with 40 CFR 261

SECTION: DIVISION 800 MATERIAL DETAILS

REVISION: Add the following section in Division 800

SECTION 846 – DURABLE WATERBORNE PAINT

846.01 DESCRIPTION. This section covers quick-drying durable waterborne pavement striping paint for permanent applications. The paint shall be ready-mixed, one-component, 100% acrylic waterborne striping paint suitable for application on such traffic-bearing surfaces as Portland cement concrete, bituminous cement concrete, asphalt, tar, and previously painted areas of these surfaces.

846.02 Approval. Select materials that conform to the composition requirements below. Provide independent analysis data and certification for each formulation stating the total concentration of each heavy metal present, the test method used for each determination, and compliance to 40 CFR 261 for leachable heavy metals content. Submit initial samples for approval before beginning striping operations. The initial sample may be sent from the manufacture of the paint. The Department will randomly sample and evaluate the paint each week that the striping operations are in progress.

The non-volatile portion of the vehicle shall be composed of a 100% acrylic polymer as determined by infrared spectral analysis. The acrylic resin used shall be a 100% cross-linking acrylic as evidenced by infrared peaks at wavelengths 1568, 1624, and 1672 cm-1 with intensities equal to those produced by an acrylic resin known to be 100% cross-linking.

Supplemental Specifications to The Standard Specifications for Road and Bridge Construction, 2008 Edition

(Effective with the January 22, 2010 Letting)

PAINT COMPOSITION		
Property and Test Method	Yellow	White
Daytime Color (CIELAB) Spectrophotometer using illuminant D65 at 45º illumination and 0º viewing with a 2º observer	L* 81.76 a* 19.79 b* 89.89 Maximum allowable variation 2.0• E*	L* 93.51 a* -1.01 b* 0.70 Maximum allowable variation 2.0• E*
Nighttime Color (CIELAB) Spectrophotometer using illuminant A at 45º illumination and 0º viewing with a 2º observer	L* 86.90 a* 24.80 b* 95.45 Maximum allowable variation 2.0• E*	L* 93.45 a* -0.79 b* 0.43 Maximum allowable variation 2.0• E*
Heavy Metals Content	Comply with 40 CFR 261	Comply with 40 CFR 261
Titanium Dioxide ASTM D 4764	NA	10% by weight of pigment min.
VOC ASTM D 2369 and D 4017	1.25 lb/gal max.	1.25 lb/gal max.
Contrast Ratio (at 15 mils wft)	0.97	0.99

846.02.01 Manufacturers Certification. Provide a certification of analysis for each lot of traffic paint produced stating conformance to the requirements of this section. Report the formulation identification, traffic paint trade name, color, date of manufacturer, total quantity of lot produced, actual quantity of traffic paint represented, sampling method utilized to obtain the samples, and data for each sample tested to represent each lot produced.

846.03 ACCEPTANCE PROCEDURES FOR NON-SPECIFICATION DURABLE WATERBORNE PAVEMENT STRIPING PAINT. When non-specification paint is inadvertently incorporated into the work the Department will accept the material with a reduction in pay. The percentage deduction is cumulative based on its compositional properties, but will not exceed 60 percent. The Department will calculate the payment reduction on the unit bid price for the routes where the non-specification paint was used.

DURABLE WATERBORNE PAVEMENT STRIPING PAINT REDUCTION SCHEDULE						
Non-conforming Property	Resin	Color	Contrast	TiO_2	VOC	Heavy Metals Content
Reduction Rate	60%	10%	10%	10%	60%	60%

STANDARD DRAWINGS THAT APPLY

ROADWAY
~ BARRIERS ~

TYPICAL BARRIER INSTALLATIONS

TYPICAL GUARDRAIL INSTALLATIONS RBI-001-09
TYPICAL GUARDRAIL INSTALLATIONS RBI-002-06

GUARDRAIL HARDWARE

STEEL BEAM GUARDRAIL (W-BEAM) RBR-001-11
GUARDRAIL COMPONENTS RBR-005-10
GUARDRAIL TERMINAL SECTIONS RBR-010-05
GUARDRAIL POSTS RBR-015-04
GUARDRAIL POSTS RBR-016-04
GUARDRAIL END TREATMENT TYPE 7 ..... RBR-050-05

TEMPORARY ~

TRAFFIC CONTROL

LANE CLOSURE TWO-LANE HIGHWAY CASE II TTC-105-01
SHOULDER CLOSURE TTC-135-01
POST SPLICING DETAIL TTD-110-01

2-70revoldhamgrstddrwgs.doc
1/16/10

COUNTY OF	FISCAL YEAR	SHEET NO.	TOTAL SHEETS

NOTES

1. DELINEATOR SHALL BE MEASURED AND PAID FOR AT THE CONTRACT UNIT PRICE EACH, AND SHALL INCLUDE ALL MATERIALS AND LABOR NECESSARY FOR ONE COMPLETE INSTALLATION.
2.

CODE	PAY ITEM	PAY UNIT
1982	DELINEATOR FOR GUARDRAIL - WHITE	EACH
1983	DELINEATOR FOR GUARDRL - YELLOW	EACH

3. GUARDRAIL DELINEATORS SHALL BE REQUIRED ON ALL ROADWAYS WITH SHOULDERS 6'-0" IN WIDTH OR LESS AND AT OTHER LOCATIONS WHERE THE GUARDRAIL LEADS INTO HORIZONTAL CURVES OF LESS THAN 950 FEET RADIUS.
4. DELINEATORS SHALL BE MANUFACTURED FROM 12 GA. GALVANIZED STEEL.
5. DIMENSIONS SHOWN ARE APPROXIMATE AND ARE SUBJECT TO MANUFACTURES TOLERANCES.
6. WHEN CONCRETE BARRIERS EXTEND ACROSS BRIDGE STRUCTURES IN LIEU OF STEEL BEAM GUARDRAIL, DELINEATORS SHALL BE INSTALLED AT SAME VERTICAL ALIGNMENT AS ON THE GUARDRAIL AND DELINEATORS SHALL COMPLY WITH CURRENT STD. DWG. RBM-020.

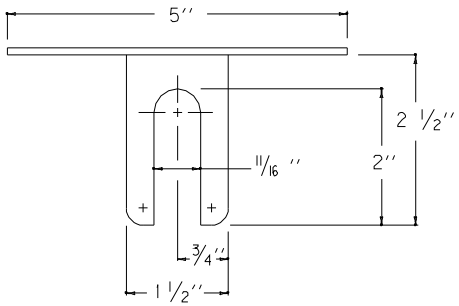

PLAN VIEW

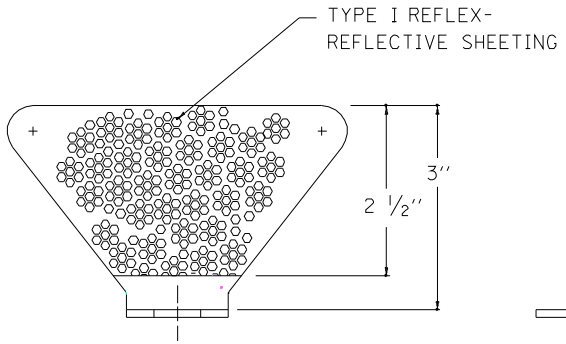

FRONT VIEW

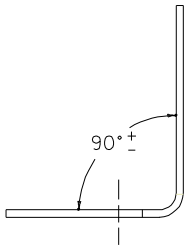

SIDE VIEW

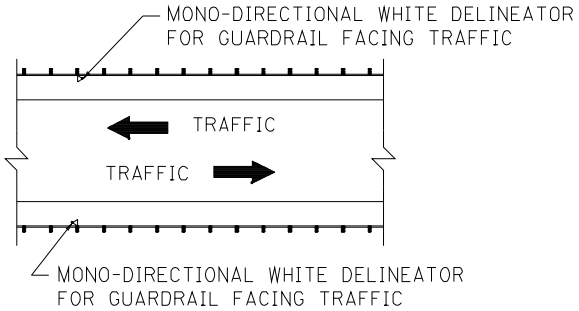

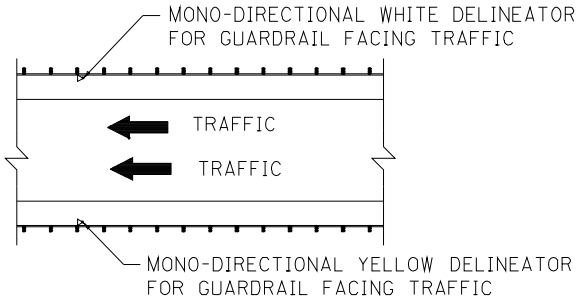

PLACEMENT OF DELINEATORS
FOR GUARDRAIL

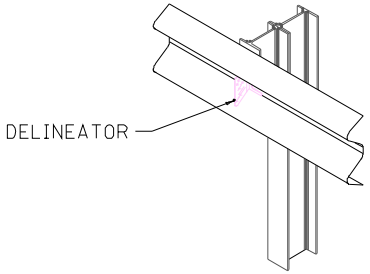

ISOMETRIC VIEW

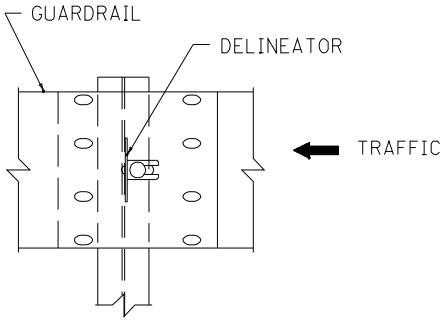

FRONT VIEW

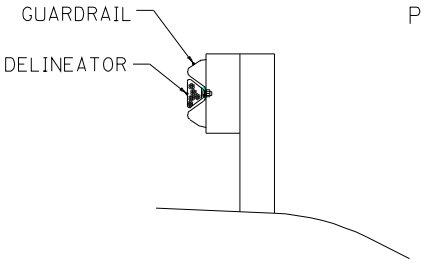

DELINEATOR SPACINGS ON HORIZONTAL CURVES	
DEGREE OF CURVE	SPACING ON CURVES
≤ 2°	100'
> 2° ≤ 4°	75'
> 4°	50'

SPACING ON TANGENTS = 100' INTERVALS

KENTUCKY DEPARTMENT OF HIGHWAYS

DELINEATORS
FOR GUARDRAIL

SUBMITTED William S. Zalick — TEBM DIVISION OF DESIGN — 12-1-99 DATE

PART III

EMPLOYMENT, WAGE AND RECORD REQUIREMENTS

REQUIRED CONTRACT PROVISIONS
FEDERAL-AID CONSTRUCTION CONTRACTS

		Page
I.	General	1
II.	Nondiscrimination	1
III.	Nonsegregated Facilities	3
IV.	Payment of Predetermined Minimum Wage	3
V.	Statements and Payrolls	6
VI.	Record of Materials, Supplies, and Labor	6
VII.	Subletting or Assigning the Contract	7
VIII.	Safety: Accident Prevention	7
IX.	False Statements Concerning Highway Projects	7
X.	Implementation of Clean Air Act and Federal Water Pollution Control Act	8
XI.	Certification Regarding Debarment, Suspension, Ineligibility, and Voluntary Exclusion	8
XII.	Certification Regarding Use of Contract Funds for Lobbying	9

ATTACHMENTS

A. Employment Preference for Appalachian Contracts (included in Appalachian contracts only)

I. GENERAL

1. These contract provisions shall apply to all work performed on the contract by the contractor's own organization and with the assistance of workers under the contractor's immediate superintendence and to all work performed on the contract by piecework, station work, or by subcontract.

2. Except as otherwise provided for in each section, the contractor shall insert in each subcontract all of the stipulations contained in these Required Contract Provisions, and further require their inclusion in any lower tier subcontract or purchase order that may in turn be made. The Required Contract Provisions shall not be incorporated by reference in any case. The prime contractor shall be responsible for compliance by any subcontractor or lower tier subcontractor with these Required Contract Provisions.

3. A breach of any of the stipulations contained in these Required Contract Provisions shall be sufficient grounds for termination of the contract.

4. A breach of the following clauses of the Required Contract Provisions may also be grounds for debarment as provided in 29 CFR 5.12:

Section I, paragraph 2;
Section IV, paragraphs 1, 2, 3, 4, and 7;
Section V, paragraphs 1 and 2a through 2g.

5. Disputes arising out of the labor standards provisions of Section IV (except paragraph 5) and Section V of these Required Contract Provisions shall not be subject to the general disputes clause of this contract. Such disputes shall be resolved in accordance with the procedures of the U.S. Department of Labor (DOL) as set forth in 29 CFR 5, 6, and 7. Disputes within the meaning of this clause include disputes between the contractor (or any of its subcontractors) and the contracting agency, the DOL, or the contractor's employees or their representatives.

6. **Selection of Labor:** During the performance of this contract, the contractor shall not:

a. discriminate against labor from any other State, possession, or territory of the United States (except for employment preference for Appalachian contracts, when applicable, as specified in Attachment A), or

b. employ convict labor for any purpose within the limits of the project unless it is labor performed by convicts who are on parole, supervised release, or probation.

II. NONDISCRIMINATION

(Applicable to all Federal-aid construction contracts and to all related subcontracts of $10,000 or more.)

1. **Equal Employment Opportunity:** Equal employment opportunity (EEO) requirements not to discriminate and to take affirmative action to assure equal opportunity as set forth under laws, executive orders, rules, regulations (28 CFR 35, 29 CFR 1630 and 41 CFR 60) and orders of the Secretary of Labor as modified by the provisions prescribed herein, and imposed pursuant to 23 U.S.C. 140 shall constitute the EEO and specific affirmative action standards for the contractor's project activities under this contract. The Equal Opportunity Construction Contract Specifications set forth under 41 CFR 60-4.3 and the provisions of the American Disabilities Act of 1990 (42 U.S.C. 12101 et seq.) set forth under 28 CFR 35 and 29 CFR 1630 are incorporated by reference in this contract. In the execution of this contract, the contractor agrees to comply with the following minimum specific requirement activities of EEO:

a. The contractor will work with the State highway agency (SHA) and the Federal Government in carrying out EEO obligations and in their review of his/her activities under the contract.

b. The contractor will accept as his operating policy the following statement:

"It is the policy of this Company to assure that applicants are employed, and that employees are treated during employment, without regard to their race, religion, sex, color, national origin, age or disability. Such action shall include: employment, upgrading, demotion, or transfer; recruitment or recruitment advertising; layoff or termination; rates of pay or other forms of compensation; and selection for training, including apprenticeship, preapprenticeship, and/or on-the-job training."

2. **EEO Officer:** The contractor will designate and make known to the SHA contracting officers an EEO Officer who will have the responsibility for and must be capable of effectively administering and promoting an active contractor program of EEO and who must be assigned adequate authority and responsibility to do so.

3. **Dissemination of Policy:** All members of the contractor's staff who are authorized to hire, supervise, promote, and discharge employees, or who recommend such action, or who are substantially involved in such action, will be made fully cognizant of, and will implement, the contractor's EEO policy and contractual responsibilities to provide EEO in each grade and classification of employment. To ensure that the above agreement will be met, the following actions will be taken as a minimum:

a. Periodic meetings of supervisory and personnel office employees will be conducted before the start of work and then not less often than once every six months, at which time the contractor's EEO policy and its implementation will be reviewed and explained. The meetings will be conducted by the EEO Officer.

b. All new supervisory or personnel office employees will be given a thorough indoctrination by the EEO Officer, covering all major aspects of the contractor's EEO obligations within thirty days following their reporting for duty with the contractor.

c. All personnel who are engaged in direct recruitment for the project will be instructed by the EEO Officer in the contractor's procedures for locating and hiring minority group employees.

d. Notices and posters setting forth the contractor's EEO policy will be placed in areas readily accessible to employees, applicants for employment and potential employees.

e. The contractor's EEO policy and the procedures to implement such policy will be brought to the attention of employees by means of meetings, employee handbooks, or other appropriate means.

4. **Recruitment:** When advertising for employees, the contractor will include in all advertisements for employees the notation: "An Equal Opportunity Employer." All such advertisements will be placed in publications having a large circulation among minority groups in the area from which the project work force would normally be derived.

a. The contractor will, unless precluded by a valid bargaining agreement, conduct systematic and direct recruitment through public and private employee referral sources likely to yield qualified minority group applicants. To meet this requirement, the contractor will identify sources of potential minority group employees, and establish with such identified sources procedures whereby minority group applicants may be referred to the contractor for employment consideration.

b. In the event the contractor has a valid bargaining agreement providing for exclusive hiring hall referrals, he is expected to observe the provisions of that agreement to the extent that the system permits the contractor's compliance with EEO contract provisions. (The DOL has held that where implementation of such agreements have the effect of discriminating against minorities or women, or obligates the contractor to do the same, such implementation violates Executive Order 11246, as amended.)

c. The contractor will encourage his present employees to refer minority group applicants for employment. Information and procedures with regard to referring minority group applicants will be discussed with employees.

5. **Personnel Actions:** Wages, working conditions, and employee benefits shall be established and administered, and personnel actions of every type, including hiring, upgrading, promotion, transfer, demotion, layoff, and termination, shall be taken without regard to race, color, religion, sex, national origin, age or disability. The following procedures shall be followed:

a. The contractor will conduct periodic inspections of project sites to insure that working conditions and employee facilities do not indicate discriminatory treatment of project site personnel.

b. The contractor will periodically evaluate the spread of wages paid within each classification to determine any evidence of discriminatory wage practices.

c. The contractor will periodically review selected personnel actions in depth to determine whether there is evidence of discrimination. Where evidence is found, the contractor will promptly takecorrective action. If the review indicates that the discrimination may extend beyond the actions reviewed, such corrective action shall include all affected persons.

d. The contractor will promptly investigate all complaints of alleged discrimination made to the contractor in connection with his obligations under this contract, will attempt to resolve such complaints, and will take appropriate corrective action within a reasonable time. If the investigation indicates that the discrimination may affect persons other than the complainant, such corrective action shall include such other persons. Upon completion of each investigation, the contractor will inform every complainant of all of his avenues of appeal.

6. **Training and Promotion:**

a. The contractor will assist in locating, qualifying, and increasing the skills of minority group and women employees, and applicants for employment.

b. Consistent with the contractor's work force requirements and as permissible under Federal and State regulations, the contractor shall make full use of training programs, i.e., apprenticeship, and on-the-job training programs for the geographical area of contract performance. Where feasible, 25 percent of apprentices or trainees in each occupation shall be in their first year of apprenticeship or training. In the event a special provision for training is provided under this contract, this subparagraph will be superseded as indicated in the special provision.

c. The contractor will advise employees and applicants for employment of available training programs and entrance requirements for each.

d. The contractor will periodically review the training and promotion potential of minority group and women employees and will encourage eligible employees to apply for such training and promotion.

7. **Unions:** If the contractor relies in whole or in part upon unions as a source of employees, the contractor will use his/her best efforts to obtain the cooperation of such unions to increase opportunities for minority groups and women within the unions, and to effect referrals by such unions of minority and female employees. Actions by the contractor either directly or through a contractor's association acting as agent will include the procedures set forth below:

a. The contractor will use best efforts to develop, in cooperation with the unions, joint training programs aimed toward qualifying more minority group members and women for membership in the unions and increasing the skills of minority group employees and women so that they may qualify for higher paying employment.

b. The contractor will use best efforts to incorporate an EEO clause into each union agreement to the end that such union will be contractually bound to refer applicants without regard to their race, color, religion, sex, national origin, age or disability.

c. The contractor is to obtain information as to the referral practices and policies of the labor union except that to the extent such information is within the exclusive possession of the labor union and such labor union refuses to furnish such information to the contractor, the contractor shall so certify to the SHA and shall set forth what efforts have been made to obtain such information.

d. In the event the union is unable to provide the contractor with a reasonable flow of minority and women referrals within thetime limit set forth in the collective bargaining agreement, the contractor will, through independent recruitment efforts, fill the employment vacancies without regard to race, color, religion, sex, national origin,

age or disability; making full efforts to obtain qualified and/or qualifiable minority group persons and women. (The DOL has held that it shall be no excuse that the union with which the contractor has a collective bargaining agreement providing for exclusive referral failed to refer minority employees.) In the event the union referral practice prevents the contractor from meeting the obligations pursuant to Executive Order 11246, as amended, and these special provisions, such contractor shall immediately notify the SHA.

8. **Selection of Subcontractors, Procurement of Materials and Leasing of Equipment:** The contractor shall not discriminate on the grounds of race, color, religion, sex, national origin, age or disability in the selection and retention of subcontractors, including procurement of materials and leases of equipment.

a. The contractor shall notify all potential subcontractors and suppliers of his/her EEO obligations under this contract.

b. Disadvantaged business enterprises (DBE), as defined in 49 CFR 23, shall have equal opportunity to compete for and perform subcontracts which the contractor enters into pursuant to this contract. The contractor will use his best efforts to solicit bids from and to utilize DBE subcontractors or subcontractors with meaningful minority group and female representation among their employees. Contractors shall obtain lists of DBE construction firms from SHA personnel.

c. The contractor will use his best efforts to ensure subcontractor compliance with their EEO obligations.

9. **Records and Reports:** The contractor shall keep such records as necessary to document compliance with the EEO requirements. Such records shall be retained for a period of three years following completion of the contract work and shall be available at reasonable times and places for inspection by authorized representatives of the SHA and the FHWA.

a. The records kept by the contractor shall document the following:

(1) The number of minority and non-minority group members and women employed in each work classification on the project;

(2) The progress and efforts being made in cooperation with unions, when applicable, to increase employment opportunities for minorities and women;

(3) The progress and efforts being made in locating, hiring, training, qualifying, and upgrading minority and female employees; and

(4) The progress and efforts being made in securing the services of DBE subcontractors or subcontractors with meaningful minority and female representation among their employees.

b. The contractors will submit an annual report to the SHA each July for the duration of the project, indicating the number of minority, women, and non-minority group employees currently engaged in each work classification required by the contract work. This information is to be reported on Form FHWA-1391. If on-the-job training is being required by special provision, the contractor will be required to collect and report training data.

III. NONSEGREGATED FACILITIES

(Applicable to all Federal-aid construction contracts and to all related subcontracts of $10,000 or more.)

a. By submission of this bid, the execution of this contract or subcontract, or the consummation of this material supply agreement or purchase order, as appropriate, the bidder, Federal-aid construction contractor, subcontractor, material supplier, or vendor, as appropriate, certifies that the firm does not maintain or provide for its employees any segregated facilities at any of its establishments, and that the firm does not permit its employees to perform their services at any location, under its control, where segregated facilities are maintained. The firm agrees that a breach of this certification is a violation of the EEO provisions of this contract. The firm further certifies that no employee will be denied access to adequate facilities on the basis of sex or disability.

b. As used in this certification, the term "segregated facilities" means any waiting rooms, work areas, restrooms and washrooms, restaurants and other eating areas, timeclocks, locker rooms, and other storage or dressing areas, parking lots, drinking fountains, recreation or entertainment areas, transportation, and housing facilities provided for employees which are segregated by explicit directive, or are, in fact, segregated on the basis of race, color, religion, national origin, age or disability, because of habit, local custom, or otherwise. The only exception will be for the disabled when the demands for accessibility override (e.g. disabled parking).

c. The contractor agrees that it has obtained or will obtain identical certification from proposed subcontractors or material suppliers prior to award of subcontracts or consummation of material supply agreements of $10,000 or more and that it will retain such certifications in its files.

IV. PAYMENT OF PREDETERMINED MINIMUM WAGE

(Applicable to all Federal-aid construction contracts exceeding $2,000 and to all related subcontracts, except for projects located on roadways classified as local roads or rural minor collectors, which are exempt.)

1. **General:**

a. All mechanics and laborers employed or working upon the site of the work will be paid unconditionally and not less often than once a week and without subsequent deduction or rebate on any account [except such payroll deductions as are permitted by regulations (29 CFR 3) issued by the Secretary of Labor under the Copeland Act (40 U.S.C. 276c)] the full amounts of wages and bona fide fringe benefits (or cash equivalents thereof) due at time of payment. The payment shall be computed at wage rates not less than those contained in the wage determination of the Secretary of Labor (hereinafter "the wage determination") which is attached hereto and made a part hereof, regardless of any contractual relationship which may be alleged to exist between the contractor or its subcontractors and such laborers and mechanics. The wage determination (including any additional classifications and wage rates conformed under paragraph 2 of this Section IV and the DOL poster (WH-1321) or Form FHWA-1495) shall be posted at all times by the contractor and its subcontractors at the site of the work in a prominent and accessible place where it can be easily seen by the workers. For the purpose of this Section, contributions made or costs reasonably anticipated for bona fide fringe benefits under Section 1(b)(2) of the Davis-Bacon Act (40 U.S.C. 276a) on behalf of laborers or mechanics are considered wages paid to such laborers or mechanics, subject to the provisions of Section IV, paragraph 3b, hereof. Also, for the purpose of this Section, regular contributions made or costs incurred for more than a weekly period (but not less often than quarterly) under plans, funds, or programs, which cover the particular weekly period, are deemed to be constructively made or incurred during such weekly period. Such laborers and mechanics

shall be paid the appropriate wage rate and fringe benefits on the wage determination for the classification of work actually performed, without regard to skill, except as provided in paragraphs 4 and 5 of this Section IV.

b. Laborers or mechanics performing work in more than one classification may be compensated at the rate specified for each classification for the time actually worked therein, provided, that the employer's payroll records accurately set forth the time spent in each classification in which work is performed.

c. All rulings and interpretations of the Davis-Bacon Act and related acts contained in 29 CFR 1, 3, and 5 are herein incorporated by reference in this contract.

2. **Classification:**

a. The SHA contracting officer shall require that any class of laborers or mechanics employed under the contract, which is not listed in the wage determination, shall be classified in conformance with the wage determination.

b. The contracting officer shall approve an additional classification, wage rate and fringe benefits only when the following criteria have been met:

(1) the work to be performed by the additional classification requested is not performed by a classification in the wage determination;

(2) the additional classification is utilized in the area by the construction industry;

(3) the proposed wage rate, including any bona fide fringe benefits, bears a reasonable relationship to the wage rates contained in the wage determination; and

(4) with respect to helpers, when such a classification prevails in the area in which the work is performed.

c. If the contractor or subcontractors, as appropriate, the laborers and mechanics (if known) to be employed in the additional classification or their representatives, and the contracting officer agree on the classification and wage rate (including the amount designated for fringe benefits where appropriate), a report of the action taken shall be sent by the contracting officer to the DOL, Administrator of the Wage and Hour Division, Employment Standards Administration, Washington, D.C. 20210. The Wage and Hour Administrator, or an authorized representative, will approve, modify, or disapprove every additional classification action within 30 days of receipt and so advise the contracting officer or will notify the contracting officer within the 30-day period that additional time is necessary.

d. In the event the contractor or subcontractors, as appropriate, the laborers or mechanics to be employed in the additional classification or their representatives, and the contracting officer do not agree on the proposed classification and wage rate (including the amount designated for fringe benefits, where appropriate), the contracting officer shall refer the questions, including the views of all interested parties and the recommendation of the contracting officer, to the Wage and Hour Administrator for determination. Said Administrator, or an authorized representative, will issue a determination within 30 days of receipt and so advise the contracting officer or will notify the contracting officer within the 30-day period that additional time is necessary

e. The wage rate (including fringe benefits where appropriate) determined pursuant to paragraph 2c or 2d of this Section IV shall be paid to all workers performing work in the additional classification from the first day on which work is performed in the classification.

3. **Payment of Fringe Benefits:**

a. Whenever the minimum wage rate prescribed in the contract for a class of laborers or mechanics includes a fringe benefit which is not expressed as an hourly rate, the contractor or subcontractors, as appropriate, shall either pay the benefit as stated in the wage determination or shall pay another bona fide fringe benefit or an hourly case equivalent thereof.

b. If the contractor or subcontractor, as appropriate, does not make payments to a trustee or other third person, he/she may consider as a part of the wages of any laborer or mechanic the amount of any costs reasonably anticipated in providing bona fide fringe benefits under a plan or program, provided, that the Secretary of Labor has found, upon the written request of the contractor, that the applicable standards of the Davis-Bacon Act have been met. The Secretary of Labor may require the contractor to set aside in a separate account assets for the meeting of obligations under the plan or program.

4. **Apprentices and Trainees (Programs of the U.S. DOL) and Helpers:**

a. Apprentices:

(1) Apprentices will be permitted to work at less than the predetermined rate for the work they performed when they are employed pursuant to and individually registered in a bona fide apprenticeship program registered with the DOL, Employment and Training Administration, Bureau of Apprenticeship and Training, or with a State apprenticeship agency recognized by the Bureau, or if a person is employed in his/her first 90 days of probationary employment as an apprentice in such an apprenticeship program, who is not individually registered in the program, but who has been certified by the Bureau of Apprenticeship and Training or a State apprenticeship agency (where appropriate) to be eligible for probationary employment as an apprentice.

(2) The allowable ratio of apprentices to journeyman-level employees on the job site in any craft classification shall not be greater than the ratio permitted to the contractor as to the entire work force under the registered program. Any employee listed on a payroll at an apprentice wage rate, who is not registered or otherwise employed as stated above, shall be paid not less than the applicable wage rate listed in the wage determination for the classification of work actually performed. In addition, any apprentice performing work on the job site in excess of the ratio permitted under the registered program shall be paid not less than the applicable wage rate on the wage determination for the work actually performed. Where a contractor or subcontractor is performing construction on a project in a locality other than that in which its program is registered, the ratios and wage rates (expressed in percentages of the journeyman-level hourly rate) specified in the contractor's or subcontractor's registered program shall be observed.

(3) Every apprentice must be paid at not less than the rate specified in the registered program for the apprentice's level ofprogress, expressed as a percentage of the journeyman-level hourly rate specified in the applicable wage determination. Apprentices shall be paid fringe benefits in accordance with the provisions of the apprenticeship program. If the apprenticeship program does not specify fringe benefits, apprentices must be paid the full amount of fringe benefits listed on the wage determination for the applicable

classification. If the Administrator for the Wage and Hour Division determines that a different practice prevails for the applicable apprentice classification, fringes shall be paid in accordance with that determination.

(4) In the event the Bureau of Apprenticeship and Training, or a State apprenticeship agency recognized by the Bureau, withdraws approval of an apprenticeship program, the contractor or subcontractor will no longer be permitted to utilize apprentices at less than the applicable predetermined rate for the comparable work performed by regular employees until an acceptable program is approved.

b. Trainees:

(1) Except as provided in 29 CFR 5.16, trainees will not be permitted to work at less than the predetermined rate for the work performed unless they are employed pursuant to and individually registered in a program which has received prior approval, evidenced by formal certification by the DOL, Employment and Training Administration.

(2) The ratio of trainees to journeyman-level employees on the job site shall not be greater than permitted under the plan approved by the Employment and Training Administration. Any employee listed on the payroll at a trainee rate who is not registered and participating in a training plan approved by the Employment and Training Administration shall be paid not less than the applicable wage rate on the wage determination for the classification of work actually performed. In addition, any trainee performing work on the job site in excess of the ratio permitted under the registered program shall be paid not less than the applicable wage rate on the wage determination for the work actually performed.

(3) Every trainee must be paid at not less than the rate specified in the approved program for his/her level of progress, expressed as a percentage of the journeyman-level hourly rate specified in the applicable wage determination. Trainees shall be paid fringe benefits in accordance with the provisions of the trainee program. If the trainee program does not mention fringe benefits, trainees shall be paid the full amount of fringe benefits listed on the wage determination unless the Administrator of the Wage and Hour Division determines that there is an apprenticeship program associated with the corresponding journeyman-level wage rate on the wage determination which provides for less than full fringe benefits for apprentices, in which case such trainees shall receive the same fringe benefits as apprentices.

(4) In the event the Employment and Training Administration withdraws approval of a training program, the contractor or subcontractor will no longer be permitted to utilize trainees at less than the applicable predetermined rate for the work performed until an acceptable program is approved.

c. Helpers:

Helpers will be permitted to work on a project if the helper classification is specified and defined on the applicable wage determination or is approved pursuant to the conformance procedure set forth in Section IV.2. Any worker listed on a payroll at a helper wage rate, who is not a helper under a approved definition, shall be paid not less than the applicable wage rate on the wagedetermination for the classification of work actually performed.

5. **Apprentices and Trainees (Programs of the U.S. DOT):**

Apprentices and trainees working under apprenticeship and skill training programs which have been certified by the Secretary of Transportation as promoting EEO in connection with Federal-aid highway construction programs are not subject to the requirements of paragraph 4 of this Section IV. The straight time hourly wage rates for apprentices and trainees under such programs will be established by the particular programs. The ratio of apprentices and trainees to journeymen shall not be greater than permitted by the terms of the particular program.

6. **Withholding:**

The SHA shall upon its own action or upon written request of an authorized representative of the DOL withhold, or cause to be withheld, from the contractor or subcontractor under this contract or any other Federal contract with the same prime contractor, or any other Federally-assisted contract subject to Davis-Bacon prevailing wage requirements which is held by the same prime contractor, as much of the accrued payments or advances as may be considered necessary to pay laborers and mechanics, including apprentices, trainees, and helpers, employed by the contractor or any subcontractor the full amount of wages required by the contract. In the event of failure to pay any laborer or mechanic, including any apprentice, trainee, or helper, employed or working on the site of the work, all or part of the wages required by the contract, the SHA contracting officer may, after written notice to the contractor, take such action as may be necessary to cause the suspension of any further payment, advance, or guarantee of funds until such violations have ceased.

7. **Overtime Requirements:**

No contractor or subcontractor contracting for any part of the contract work which may require or involve the employment of laborers, mechanics, watchmen, or guards (including apprentices, trainees, and helpers described in paragraphs 4 and 5 above) shall require or permit any laborer, mechanic, watchman, or guard in any workweek in which he/she is employed on such work, to work in excess of 40 hours in such workweek unless such laborer, mechanic, watchman, or guard receives compensation at a rate not less than one-and-one-half times his/her basic rate of pay for all hours worked in excess of 40 hours in such workweek.

8. **Violation:**

Liability for Unpaid Wages; Liquidated Damages: In the event of any violation of the clause set forth in paragraph 7 above, the contractor and any subcontractor responsible thereof shall be liable to the affected employee for his/her unpaid wages. In addition, such contractor and subcontractor shall be liable to the United States (in the case of work done under contract for the District of Columbia or a territory, to such District or to such territory) for liquidated damages. Such liquidated damages shall be computed with respect to each individual laborer, mechanic, watchman, or guard employed in violation of the clause set forth in paragraph 7, in the sum of $10 for each calendar day on which such employee was required or permitted to work in excess of the standard work week of 40 hours without payment of the overtime wages required by the clause set forth in paragraph 7.

9. **Withholding for Unpaid Wages and Liquidated Damages:**

The SHA shall upon its own action or upon written request of any authorized representative of the DOL withhold, or cause to be withheld, from any monies payable on account of work performed by the contractor or subcontractor under any such contract or any other Federal contract with the same prime contractor, or any other Federally-assisted contract subject to the Contract Work Hours and Safety Standards Act, which is held by the same prime contractor, such sums as may be determined to be necessary to satisfy any

liabilities of such contractor or subcontractor for unpaid wages and liquidated damages as provided in the clause set forth in paragraph 8 above.

V. STATEMENTS AND PAYROLLS

(Applicable to all Federal-aid construction contracts exceeding $2,000 and to all related subcontracts, except for projects located on roadways classified as local roads or rural collectors, which are exempt.)

1. **Compliance with Copeland Regulations (29 CFR 3):**

The contractor shall comply with the Copeland Regulations of the Secretary of Labor which are herein incorporated by reference.

2. **Payrolls and Payroll Records:**

a. Payrolls and basic records relating thereto shall be maintained by the contractor and each subcontractor during the course of the work and preserved for a period of 3 years from the date of completion of the contract for all laborers, mechanics, apprentices, trainees, watchmen, helpers, and guards working at the site of the work.

b. The payroll records shall contain the name, social security number, and address of each such employee; his or her correct classification; hourly rates of wages paid (including rates of contributions or costs anticipated for bona fide fringe benefits or cash equivalent thereof the types described in Section 1(b)(2)(B) of the Davis Bacon Act); daily and weekly number of hours worked; deductions made; and actual wages paid. In addition, for Appalachian contracts, the payroll records shall contain a notation indicating whether the employee does, or does not, normally reside in the labor area as defined in Attachment A, paragraph 1. Whenever the Secretary of Labor, pursuant to Section IV, paragraph 3b, has found that the wages of any laborer or mechanic include the amount of any costs reasonably anticipated in providing benefits under a plan or program described in Section 1(b)(2)(B) of the Davis Bacon Act, the contractor and each subcontractor shall maintain records which show that the commitment to provide such benefits is enforceable, that the plan or program is financially responsible, that the plan or program has been communicated in writing to the laborers or mechanics affected, and show the cost anticipated or the actual cost incurred in providing benefits. Contractors or subcontractors employing apprentices or trainees under approved programs shall maintain written evidence of the registration of apprentices and trainees, and ratios and wage rates prescribed in the applicable programs.

c. Each contractor and subcontractor shall furnish, each week in which any contract work is performed, to the SHA resident engineer a payroll of wages paid each of its employees (including apprentices, trainees, and helpers, described in Section IV, paragraphs 4 and 5, and watchmen and guards engaged on work during the preceding weekly payroll period). The payroll submitted required to be maintained under paragraph 2b of this Section V. This information may be submitted in any form desired. Optional Form WH-347 is available for this purpose and may be purchased from the Superintendent of Documents (Federal stock number 029-005-0014-1), U.S. Government Printing Office, Washington, D.C. 20402. The prime contractor is responsible for the submission of copies of payrolls by all subcontractors.

d. Each payroll submitted shall be accompanied by a "Statement of Compliance," signed by the contractor or subcontractor or his/her agent who pays or supervises the payment of the persons employed under the contract and shall certify the following:

(1) that the payroll for the payroll period contains the information required to be maintained under paragraph 2b of this Section V and that such information is correct and complete;

(2) that such laborer or mechanic (including each helper, apprentice, and trainee) employed on the contract during the payroll period has been paid the full weekly wages earned, without rebate, either directly or indirectly, and that no deductions have been made either directly or indirectly from the full wages earned, other than permissible deductions as set forth in the Regulations, 29 CFR 3;

(3) that each laborer or mechanic has been paid not less that the applicable wage rate and fringe benefits or cash equivalent for the classification of worked performed, as specified in the applicable wage determination incorporated into the contract.

e. The weekly submission of a properly executed certification set forth on the reverse side of Optional Form WH-347 shall satisfy the requirement for submission of the "Statement of Compliance" required by paragraph 2d of this Section V.

f. The falsification of any of the above certifications may subject the contractor to civil or criminal prosecution under 18 U.S.C. 1001 and 31 U.S.C. 231.

g. The contractor or subcontractor shall make the records required under paragraph 2b of this Section V available for inspection, copying, or transcription by authorized representatives of the SHA, the FHWA, or the DOL, and shall permit such representatives to interview employees during working hours on the job. If the contractor or subcontractor fails to submit the required records or to make them available, the SHA, the FHWA, the DOL, or all may, after written notice to the contractor, sponsor, applicant, or owner, take such actions as may be necessary to cause the suspension of any further payment, advance, or guarantee of funds. Furthermore, failure to submit the required records upon request or to make such records available may be grounds for debarment action pursuant to 29 CFR 5.12.

VI. RECORD OF MATERIALS, SUPPLIES, AND LABOR

1. On all Federal-aid contracts on the National Highway System, except those which provide solely for the installation of protective devices at railroad grade crossings, those which are constructed on a force account or direct labor basis, highway beautification contracts, and contracts for which the total final construction cost for roadway and bridge is less than $1,000,000 (23 CFR 635) the contractor shall:

a. Become familiar with the list of specific materials and supplies contained in Form FHWA-47, "Statement of Materials and Labor Used by Contractor of Highway Construction Involving Federal Funds," prior to the commencement of work under this contract.

b. Maintain a record of the total cost of all materials and supplies purchased for and incorporated in the work, and also of the quantities of those specific materials and supplies listed on Form FHWA-47, and in the units shown on Form FHWA-47.

c. Furnish, upon the completion of the contract, to the SHA resident engineer on Form FHWA-47 together with the data required in paragraph 1b relative to materials and supplies, a final labor summary of all contract work indicating the total hours worked and the total amount earned.

2. At the prime contractor's option, either a single report covering all contract work or separate reports for the contractor and for each subcontract shall be submitted.

VII. SUBLETTING OR ASSIGNING THE CONTRACT

1. The contractor shall perform with its own organization contract work amounting to not less than 30 percent (or a greater percentage if specified elsewhere in the contract) of the total original contract price, excluding any specialty items designated by the State. Specialty items may be performed by subcontract and the amount of any such specialty items performed may be deducted from the total original contract price before computing the amount of work required to be performed by the contractor's own organization (23 CFR 635).

a. "Its own organization" shall be construed to include only workers employed and paid directly by the prime contractor and equipment owned or rented by the prime contractor, with or without operators. Such term does not include employees or equipment of a subcontractor, assignee, or agent of the prime contractor.

b. "Specialty Items" shall be construed to be limited to work that requires highly specialized knowledge, abilities, or equipment not ordinarily available in the type of contracting organizations qualified and expected to bid on the contract as a whole and in general are to be limited to minor components of the overall contract.

2. The contract amount upon which the requirements set forth in paragraph 1 of Section VII is computed includes the cost of material and manufactured products which are to be purchased or produced by the contractor under the contract provisions.

3. The contractor shall furnish (a) a competent superintendent or supervisor who is employed by the firm, has full authority to direct performance of the work in accordance with the contract requirements, and is in charge of all construction operations (regardless of who performs the work) and (b) such other of its own organizational resources (supervision, management, and engineering services) as the SHA contracting officer determines is necessary to assure the performance of the contract.

4. No portion of the contract shall be sublet, assigned or otherwise disposed of except with the written consent of the SHA contracting officer, or authorized representative, and such consent when given shall not be construed to relieve the contractor of any responsibility for the fulfillment of the contract. Written consent will be given only after the SHA has assured that each subcontract is evidenced in writing and that it contains all pertinent provisions and requirements of the prime contract.

VIII. SAFETY: ACCIDENT PREVENTION

1. In the performance of this contract the contractor shall comply with all applicable Federal, State, and local laws governing safety, health, and sanitation (23 CFR 635). The contractor shall provideall safeguards, safety devices and protective equipment and take any other needed actions as it determines, or as the SHA contracting officer may determine, to be reasonably necessary to protect the life and health of employees on the job and the safety of the public and to protect property in connection with the performance of the work covered by the contract.

2. It is a condition of this contract, and shall be made a condition of each subcontract, which the contractor enters into pursuant to this contract, that the contractor and any subcontractor shall not permit any employee, in performance of the contract, to work in surroundings or under conditions which are unsanitary, hazardous or dangerous to his/her health or safety, as determined under construction safety and health standards (29 CFR 1926) promulgated by the Secretary of Labor, in accordance with Section 107 of the Contract Work Hours and Safety Standards Act (40 U.S.C. 333).

3. Pursuant to 29 CFR 1926.3, it is a condition of this contract that the Secretary of Labor or authorized representative thereof, shall have right of entry to any site of contract performance to inspect or investigate the matter of compliance with the construction safety and health standards and to carry out the duties of the Secretary under Section 107 of the Contract Work Hours and Safety Standards Act (40 U.S.C. 333).

IX. FALSE STATEMENTS CONCERNING HIGHWAY PROJECTS

In order to assure high quality and durable construction in conformity with approved plans and specifications and a high degree of reliability on statements and representations made by engineers, contractors, suppliers, and workers on Federal-aid highway projects, it is essential that all persons concerned with the project perform their functions as carefully, thoroughly, and honestly as possible. Willful falsification, distortion, or misrepresentation with respect to any facts related to the project is a violation of Federal law. To prevent any misunderstanding regarding the seriousness of these and similar acts, the following notice shall be posted on each Federal-aid highway project (23 CFR 635) in one or more places where it is readily available to all persons concerned with the project:

NOTICE TO ALL PERSONNEL ENGAGED ON FEDERAL-AID HIGHWAY PROJECTS

18 U.S.C. 1020 reads as follows:

"Whoever, being an officer, agent, or employee of the United States, or of any State or Territory, or whoever, whether a person, association, firm, or corporation, knowingly makes any false statement, false representation, or false report as to the character, quality, quantity, or cost of the material used or to be used, or the quantity or quality of the work performed or to be performed, or the cost thereof in connection with the submission of plans, maps, specifications, contracts, or costs of construction on any highway or related project submitted for approval to the Secretary of Transportation; or

Whoever knowingly makes any false statement, false representation, false report or false claim with respect to the character, quality, quantity, or cost of any work performed or to be performed, or materials furnished or to be furnished, in connection with the construction of any highway or related project approved by the Secretary of Transportation; or

Whoever knowingly makes any false statement or false representation as to material fact in any statement, certificate, or report submitted pursuant to provisions of the Federal-aid Roads Act approved July 1, 1916, (39 Stat. 355), as amended andsupplemented;

Shall be fined not more that $10,000 or imprisoned not more than 5 years or both."

X. IMPLEMENTATION OF CLEAN AIR ACT AND FEDERAL WATER POLLUTION CONTROL ACT

(Applicable to all Federal-aid construction contracts and to all related subcontracts of $100,000 or more.)

By submission of this bid or the execution of this contract, or subcontract, as appropriate, the bidder, Federal-aid construction contractor, or subcontractor, as appropriate, will be deemed to have stipulated as follows:

1. That any facility that is or will be utilized in the performance of this contract, unless such contract is exempt under the Clean Air Act, as amended (42 U.S.C. 1857 et seq., as amended by Pub.L. 91-604), and under the Federal Water Pollution Control Act, as amended (33 U.S.C. 1251 et seq., as amended by Pub.L. 92-500), Executive Order 11738, and regulations in implementation thereof (40 CFR 15) is not listed, on the date of contract award, on the U.S. Environmental Protection Agency (EPA) List of Violating Facilities pursuant to 40 CFR 15.20.

2. That the firm agrees to comply and remain in compliance with all the requirements of Section 114 of the Clean Air Act and Section 308 of the Federal Water Pollution Control Act and all regulations and guidelines listed thereunder.

3. That the firm shall promptly notify the SHA of the receipt of any communication from the Director, Office of Federal Activities, EPA, indicating that a facility that is or will be utilized for the contract is under consideration to be listed on the EPA List of Violating Facilities.

4. That the firm agrees to include or cause to be included the requirements of paragraph 1 through 4 of this Section X in every nonexempt subcontract, and further agrees to take such action as the government may direct as a means of enforcing such requirements.

XI. CERTIFICATION REGARDING DEBARMENT, SUSPENSION, INELIGIBILITY AND VOLUNTARY EXCLUSION

1. **Instructions for Certification - Primary Covered Transactions:**

(Applicable to all Federal-aid contracts - 49 CFR 29)

a. By signing and submitting this proposal, the prospective primary participant is providing the certification set out below.

b. The inability of a person to provide the certification set out below will not necessarily result in denial of participation in this covered transaction. The prospective participant shall submit an explanation of why it cannot provide the certification set out below. The certification or explanation will be considered in connection with the department or agency's determination whether to enter into this transaction. However, failure of the prospective primary participant to furnish a certification or an explanation shall disqualify such a person from participation in this transaction.

c. The certification in this clause is a material representation of fact upon which reliance was placed when the department or agency determined to enter into this transaction. If it is later determined that the prospective primary participant knowinglyrendered an erroneous certification, in addition to other remedies available to the Federal Government, the department or agency may terminate this transaction for cause of default.

d. The prospective primary participant shall provide immediate written notice to the department or agency to whom this proposal is submitted if any time the prospective primary participant learns that its certification was erroneous when submitted or has become erroneous by reason of changed circumstances.

e. The terms "covered transaction," "debarred," "suspended," "ineligible," "lower tier covered transaction," "participant," "person," "primary covered transaction," "principal," "proposal," and "voluntarily excluded," as used in this clause, have the meanings set out in the Definitions and Coverage sections of rules implementing Executive Order 12549. You may contact the department or agency to which this proposal is submitted for assistance in obtaining a copy of those regulations.

f. The prospective primary participant agrees by submitting this proposal that, should the proposed covered transaction be entered into, it shall not knowingly enter into any lower tier covered transaction with a person who is debarred, suspended, declared ineligible, or voluntarily excluded from participation in this covered transaction, unless authorized by the department or agency entering into this transaction.

g. The prospective primary participant further agrees by submitting this proposal that it will include the clause titled "Certification Regarding Debarment, Suspension, Ineligibility and Voluntary Exclusion-Lower Tier Covered Transaction," provided by the department or agency entering into this covered transaction, without modification, in all lower tier covered transactions and in all solicitations for lower tier covered transactions.

h. A participant in a covered transaction may rely upon a certification of a prospective participant in a lower tier covered transaction that is not debarred, suspended, ineligible, or voluntarily excluded from the covered transaction, unless it knows that the certification is erroneous. A participant may decide the method and frequency by which it determines the eligibility of its principals. Each participant may, but is not required to, check the nonprocurement portion of the "Lists of Parties Excluded From Federal Procurement or Nonprocurement Programs" (Nonprocurement List) which is compiled by the General Services Administration.

i. Nothing contained in the foregoing shall be construed to require establishment of a system of records in order to render in good faith the certification required by this clause. The knowledge and information of participant is not required to exceed that which is normally possessed by a prudent person in the ordinary course of business dealings.

j. Except for transactions authorized under paragraph f of these instructions, if a participant in a covered transaction knowingly enters into a lower tier covered transaction with a person who is suspended, debarred, ineligible, or voluntarily excluded from participation in this transaction, in addition to other remedies available to the Federal Government, the department or agency may terminate this transaction for cause or default.

* * * * *

Certification Regarding Debarment, Suspension, Ineligibility and Voluntary Exclusion--Primary Covered Transactions

1. The prospective primary participant certifies to the best of its knowledge and belief, that it and its principals:

a. Are not presently debarred, suspended, proposed for debarment, declared ineligible, or voluntarily excluded from covered transactions by any Federal department or agency;

b. Have not within a 3-year period preceding this proposal been convicted of or had a civil judgement rendered against them for commission of fraud or a criminal offense in connection with obtaining, attempting to obtain, or performing a public (Federal, State or local) transaction or contract under a public transaction; violation of Federal or State antitrust statutes or commission of embezzlement, theft, forgery, bribery, falsification or destruction of records, making false statements, or receiving stolen property;

c. Are not presently indicted for or otherwise criminally or civilly charged by a governmental entity (Federal, State or local) with commission of any of the offenses enumerated in paragraph 1b of this certification; and

d. Have not within a 3-year period preceding this application/proposal had one or more public transactions (Federal, State or local) terminated for cause or default.

2. Where the prospective primary participant is unable to certify to any of the statements in this certification, such prospective participant shall attach an explanation to this proposal.

* * * * *

2. **Instructions for Certification - Lower Tier Covered Transactions:**

(Applicable to all subcontracts, purchase orders and other lower tier transactions of $25,000 or more - 49 CFR 29)

a. By signing and submitting this proposal, the prospective lower tier is providing the certification set out below.

b. The certification in this clause is a material representation of fact upon which reliance was placed when this transaction was entered into. If it is later determined that the prospective lower tier participant knowingly rendered an erroneous certification, in addition to other remedies available to the Federal Government, the department, or agency with which this transaction originated may pursue available remedies, including suspension and/or debarment.

c. The prospective lower tier participant shall provide immediate written notice to the person to which this proposal is submitted if at any time the prospective lower tier participant learns that its certification was erroneous by reason of changed circumstances.

d. The terms "covered transaction," "debarred," "suspended," "ineligible," "primary covered transaction," "participant," "person," "principal," "proposal," and "voluntarily excluded," as used in this clause, have the meanings set out in the Definitions and Coverage sections of rules implementing Executive Order 12549. You may contact the person to which this proposal is submitted for assistance in obtaining a copy of those regulations.

e. The prospective lower tier participant agrees by submitting this proposal that, should the proposed covered transaction be entered into, it shall not knowingly enter into any lower tier covered transaction with a person who is debarred, suspended, declared ineligible, or voluntarily excluded from participation in this covered transaction, unless authorized by the department or agency with which this transaction originated.

f. The prospective lower tier participant further agrees by submitting this proposal that it will include this clause titled "Certification Regarding Debarment, Suspension, Ineligibility and Voluntary Exclusion-Lower Tier Covered Transaction," without modification, in all lower tier covered transactions and in all solicitations for lower tier covered transactions.

g. A participant in a covered transaction may rely upon a certification of a prospective participant in a lower tier covered transaction that is not debarred, suspended, ineligible, or voluntarily excluded from the covered transaction, unless it knows that the certification is erroneous. A participant may decide the method and frequency by which it determines the eligibility of its principals. Each participant may, but is not required to, check the Nonprocurement List.

h. Nothing contained in the foregoing shall be construed to require establishment of a system of records in order to render in good faith the certification required by this clause. The knowledge and information of participant is not required to exceed that which is normally possessed by a prudent person in the ordinary course of business dealings.

i. Except for transactions authorized under paragraph e of these instructions, if a participant in a covered transaction knowingly enters into a lower tier covered transaction with a person who is suspended, debarred, ineligible, or voluntarily excluded from participation in this transaction, in addition to other remedies available to the Federal Government, the department or agency with which this transaction originated may pursue available remedies, including suspension and/or debarment.

* * * * *

Certification Regarding Debarment, Suspension, Ineligibility and Voluntary Exclusion--Lower Tier Covered Transactions:

1. The prospective lower tier participant certifies, by submission of this proposal, that neither it nor its principals is presently debarred, suspended, proposed for debarment, declared ineligible, or voluntarily excluded from participation in this transaction by any Federal department or agency.

2. Where the prospective lower tier participant is unable to certify to any of the statements in this certification, such prospective participant shall attach an explanation to this proposal.

* * * * *

XII. CERTIFICATION REGARDING USE OF CONTRACT FUNDS FOR LOBBYING

(Applicable to all Federal-aid construction contracts and to all related subcontracts which exceed $100,000 - 49 CFR 20)

1. The prospective participant certifies, by signing and submitting this bid or proposal, to the best of his or her knowledge and belief, that:

a. No Federal appropriated funds have been paid or will be paid, by or on behalf of the undersigned, to any person for influencing or attempting to influence an officer or employee of any Federal agency, a Member of Congress, an officer or employee of Congress, or an employee of a Member of Congress in connection with the awarding of any Federal contract, the making of any Federal grant, the making of any Federal loan, the entering into of any cooperative agreement, and the extension, continuation, renewal, amendment, or modification of any Federal contract, grant, loan, or cooperative agreement.

b. If any funds other than Federal appropriated funds have been paid or will be paid to any person for influencing or attempting to influence an officer or employee of any Federal agency, a Member of Congress, an officer or employee of Congress, or an employee of a Member of Congress in connection with this Federal contract, grant, loan, or cooperative agreement, the undersigned shall complete and submit Standard Form-LLL, "Disclosure Form to Report Lobbying," in accordance with its instructions.

2. This certification is a material representation of fact upon which reliance was placed when this transaction was made or entered into. Submission of this certification is a prerequisite for making or entering into this transaction imposed by 31 U.S.C. 1352. Any person who fails to file the required certification shall be subject to a civil penalty of not less than $10,000 and not more than $100,000 for each such failure.

3. The prospective participant also agrees by submitting his or her bid or proposal that he or she shall require that the language of this certification be included in all lower tier subcontracts, which exceed $100,000 and that all such recipients shall certify and disclose accordingly.

KENTUCKY TRANSPORTATION CABINET
DEPARTMENT OF HIGHWAYS

EMPLOYMENT REQUIREMENTS
RELATING TO
NONDISCRIMINATION OF EMPLOYEES
(APPLICABLE TO FEDERAL-AID SYSTEM CONTRACTS)

AN ACT OF THE KENTUCKY GENERAL ASSEMBLY TO PREVENT DISCRIMINATION IN EMPLOYMENT

KRS CHAPTER 344
EFFECTIVE JUNE 16, 1972

The contract on this project, in accordance with KRS Chapter 344, provides that during the performance of this contract, the contractor agrees as follows:

1. The contractor shall not fail or refuse to hire, or shall not discharge any individual, or otherwise discriminate against an individual with respect to his compensation, terms, conditions, or privileges of employment, because of such individual's race, color, religion, national origin, sex, disability or age (between forty and seventy); or limit, segregate, or classify his employees in any way which would deprive or tend to deprive an individual of employment opportunities or otherwise adversely affect his status as an employee, because of such individual's race, color, religion, national origin, sex, disability or age (between forty and seventy). The contractor agrees to post in conspicuous places, available to employees and applicants for employment, notices to be provided setting forth the provisions of this nondiscrimination clause.

2. The contractor shall not print or publish or cause to be printed or published a notice or advertisement relating to employment by such an employer or membership in or any classification or referral for employment by the employment agency, indicating any preference, limitation, specification, or discrimination, based on race, color, religion, national origin, sex, disability or age (between forty and seventy), except that such notice or advertisement may indicate a preference, limitation, or specification based on religion, or national origin when religion, or national origin is a bona fide occupational qualification for employment.

3. If the contractor is in control of apprenticeship or other training or retraining, including on-the-job training programs, he shall not discriminate against an individual because of his race, color, religion, national origin, sex, disability or age (between forty and seventy), in admission to, or employment in any program established to provide apprenticeship or other training.

4. The contractor will send to each labor union or representative of workers with which he has a collective bargaining agreement or other contract or understanding, a notice to be provided advising the said labor union or workers' representative of the contractor's commitments under this section, and shall post copies of the notice in conspicuous places available to employees and applicants for employment. The contractor will take such action with respect to any subcontract or purchase order as the administrating agency may direct as a means of enforcing such provisions, including sanctions for non-compliance.

REVISED: 12-3-92

EXECUTIVE BRANCH CODE OF ETHICS

In the 1992 regular legislative session, the General Assembly passed and Governor Brereton Jones signed Senate Bill 63 (codified as KRS 11A), the Executive Branch Code of Ethics, which states, in part:

> KRS 11A.040 (6) provides:
>
> No present or former public servant shall, within six (6) months of following termination of his office or employment, accept employment, compensation or other economic benefit from any person or business that contracts or does business with the state in matters in which he was directly involved during his tenure. This provision shall not prohibit an individual from returning to the same business, firm, occupation, or profession in which he was involved prior to taking office or beginning his term of employment, provided that, for a period of six (6) months, he personally refrains from working on any matter in which he was directly involved in state government. This subsection shall not prohibit the performance of ministerial functions, including, but not limited to, filing tax returns, filing applications for permits or licenses, or filing incorporation papers.
>
> KRS 11A.040 (8) states:
>
> A former public servant shall not represent a person in a matter before a state agency in which the former public servant was directly involved, for a period of one (1) year after the latter of:
>
> a) The date of leaving office or termination of employment; or
> b) The date the term of office expires to which the public servant was elected.

This law is intended to promote public confidence in the integrity of state government and to declare as public policy the idea that state employees should view their work as a public trust and not as a way to obtain private benefits.

If you have worked for the executive branch of state government within the past six months, you may be subject to the law's prohibitions. The law's applicability may be different if you hold elected office or are contemplating representation of another before a state agency.

Also, if you are affiliated with a firm which does business with the state and which employs former state executive-branch employees, you should be aware that the law may apply to them.

In case of doubt, the law permits you to request an advisory opinion from the Executive Branch Ethics Commission, Room 136, Capitol Building, 700 Capitol Avenue, Frankfort, Kentucky 40601; telephone (502) 564-7954.

TRANSPORTATION CABINET
DIVISION OF CONSTRUCTION PROCUREMENT
COMPLIANCE SECTION
PROJECT WAGE RATES

	HIGHWAY BASIC HOURLY RATES	FRINGE BENEFIT PAYMENTS COMBINED
CRAFTS:		
Breckinridge County:		
Bricklayers	26.47	12.28
Bullitt, Carroll, Grayson, Hardin, Henry, Jefferson, Larue, Marion, Meade, Nelson, Oldham, Shelby, Spencer and Trimble Counties:		
Bricklayers	24.11	9.97
Bracken, Gallatin, Grant, Mason and Robertson Counties:		
Bricklayers	26.12	9.73
Boyd, Carter, Elliott, Fleming, Greenup, Lewis and Rowan Counties:		
Bricklayers	26.82	15.30
Anderson, Bath, Bourbon, Boyle, Clark, Fayette, Franklin, Harrison, Jessamine, Madison, Mercer, Montgomery, Nicholas, Owen, Scott, Washington and Woodford Counties:		
Bricklayers (Layout Men)	24.36	9.97
Bricklayers	24.11	9.97
Refractory/Acid Brick/Glass	24.61	9.97
All Counties		
Carpenters:	24.84	10.23
Divers	37.64	10.23
Piledrivermen	25.09	10.23
Bracken and Grant Counties:		
Millwrights	27.55	15.39
Anderson, Bath, Bourbon, Boyle, Clark, Fayette, Franklin, Harrison, Jessamine, Madison, Mercer, Montgomery, Nicholas, Owen, Scott and Woodford Counties:		
Millwrights	22.95	13.50
Boyd, Carter, Elliott, Fleming, Greenup, Lewis, Mason, Robertson, and Rowan Counties:		
Millwrights	30.60	13.78
Breckinridge, Bullitt, Carroll, Gallatin, Grayson, Hardin, Henry, Jefferson, Larue, Marion, Meade, Nelson, Oldham, Shelby, Spencer, Trimble and Washington Counties:		
Millwrights	24.18	15.64
Bracken, Gallatin and Grant Counties:		
Electricians	26.11	13.32
Sound Communications:		
Technician	20.45	6.95

TRANSPORTATION CABINET
DIVISION OF CONSTRUCTION PROCUREMENT
COMPLIANCE SECTION
PROJECT WAGE RATES

	HIGHWAY BASIC HOURLY RATES	FRINGE BENEFIT PAYMENTS COMBINED

CRAFTS: (continued)
Boyd, Carter, Elliott and Rowan Counties:
Electricians:
Cable Splicers.....32.68..... 18.13
Electricians.....31.12..... 18.08
Anderson, Bath, Bourbon, Boyle, Breckinridge, Bullitt, Carroll, Clark, Fayette, Franklin, Grayson, Hardin, Harrison, Henry, Jefferson, Jessamine, Larue, Madison, Marion, Meade, Mercer, Montgomery, Nelson, Nicholas, Oldham, Owen, Robertson, Scott, Shelby, Spencer, Trimble, Washington and Woodford Counties:
Electricians.....28.30..... 12.55
Fleming, Greenup, Lewis and Mason Counties:
Electricians.....30.79..... 11.88
Bourbon (Northern third, including Townships of Jackson, Millersburg, Ruddel Mills & Shawhan);Carroll (Eastern third, including the Township of Ghent); Fleming (Western part, excluding Townships of Beechburg, Colfax, Elizaville, Flemingsburg, Flemingsburg Junction, Foxport, Grange City, Hillsboro, Hilltop, Mount Carmel, Muses Mills, Nepton, Pecksridge, Plummers Landing, Plummers Mill, Poplar Plains, Ringos Mills, Tilton & Wallingford); Mason (Western two-thirds, including Townships of Dover, Lewisburg, Mays Lick, Maysville, Minerva, Moranburg, Murphysville, Ripley, Sardis, Shannon, South Ripley & Washington);
Nicholas (Townships of Barefoot, Barterville, Carlisle, Ellisville, Headquarters, Henryville, Morningglory, Myers & Oakland Mills); Owen (Townships of Beechwood, Bromley, Fairbanks, Holbrook, Jonesville, Long Ridge, Lusby's Mill, New, New Columbus, New Liberty, Owenton, Poplar Grove, Rockdale, Sanders, Teresita & Wheatley); Scott (Northern two-thirds, including Townships of Biddle, Davis, Delaplain, Elmville, Longlick, Muddy Ford, Oxford, Rogers Gap, Sadieville, Skinnersburg & Stonewall) & Bracken, Gallatin, Grant, Harrison & Robertson Counties:
Ironworkers:
Fence Erector .....23.55..... 16.72
Structural.....26.17..... 16.72
Bourbon (Southern two-thirds, including Townships of Austerlity, Centerville, Clintonville, Elizabeth, Hutchison, Littlerock, North Middletown & Paris); Carroll (Western two-thirds, including Townships of Carrollton, Easterday, English, Locust, Louis, Prestonville & Worthville); Clark (Western two-thirds, including Townships of Becknerville, Flanagan, Ford, Pine Grove, Winchester & Wyandotte); Owen (Eastern eighth, including Townships of Glenmary, Gratz, Monterey, Perry Park & Tacketts Mill); Scott (Southern third, including Townships of Georgetown, Great Crossing, Newtown, Stamping Ground & Woodlake); Anderson, Boyle, Breckinridge, Bullitt, Fayette, Franklin, Grayson, Hardin, Henry, Jefferson,

TRANSPORTATION CABINET
DIVISION OF CONSTRUCTION PROCUREMENT
COMPLIANCE SECTION
PROJECT WAGE RATES

	HIGHWAY BASIC HOURLY RATES	FRINGE BENEFIT PAYMENTS COMBINED

CRAFTS: (continued)

Jessamine, Larue, Madison, Marion, Meade, Mercer, Nelson, Oldham, Shelby, Spencer, Trimble, Washington & Woodford Counties:

Ironworkers.....24.78..... 17.04

Bourbon (Northern third, including Townships of Jackson, Millersburg, Ruddel Mills & Shawhan); Carroll (Eastern third, including the Townships of Ghent); Fleming (Western part, excluding Townships of Beechburg, Colfax, Elizaville, Flemingsburg, Flemingsburg Junction, Foxport, Grange City, Hillsboro, Hilltop, Mount Carmel, Muses Mills, Nepton, Pecksridge, Plummers Landing, Plummers Mill, Poplar Plains, Ringos Mills, Tilton & Wallingford); Mason (Western two-thirds, including Townships of Dover, Lewisburg, Mays Lick, Maysville, Minerva, Moranburg, Murphysville, Ripley, Sardis, Shannon, South Ripley & Washington); Nicholas (Townships of Barefoot, Barterville, Carlisle, Ellisville, Headquarters, Henryville, Morningglory, Myers & Oakland Mills); Owen (Townships of Beechwood, Bromley, Fairbanks, Holbrook, Jonesville, Long Ridge, Lusby's Mill, New, New Columbus, New Liberty, Owenton, Poplar Grove, Rockdale, Sanders, Teresita & Wheatley); Scott (Northern two-thirds, including Townships of Biddle, Davis, Delaplain, Elmville, Longlick, Muddy Ford, Oxford, Rogers Gap, Sadieville, Skinnersburg & Stonewall);

Bracken, Gallatin, Grant, Harrison & Robertson Counties:

Ironworkers:

Up to and including 30- mile radius of Hamilton County, Ohio Courthouse..... 26.20.....16.70
Beyond 30- mile radius of Hamilton County, Ohio Courthouse ..... 26.45.....16.70

Clark (Eastern third, including Townships of Bloomingdale, Hunt, Indian Fields, Kiddville, Loglick, Rightangele & Thomson); Fleming (Townships of Beechburg, Colfax, Elizaville, Flemingsburg, Flemingsburg Junction, Foxport, Grange City, Hillsboro, Hilltop, Mount Carmel, Muses Mills, Nepton, Pecksridge, Plummers Landing, Plummers Mill, Poplar Plains, Ringos Mills, Tilton & Wallingford); Mason (Eastern third, including Townships of Helena, Marshall, Orangeburg, Plumville & Springdale); Nicholas (Eastern eighth, including the Township of Moorefield Sprout); Bath, Boyd, Carter, Elliott, Greenup, Lewis, Montgomery & Rowan Counties:

Ironworkers:

Zone 1 .....28.38..... 17.37
Zone 2 .....28.78..... 17.37
Zone 3 .....30.38..... 17.37

Zone 1 - Up to 10 mi. radius of union hall, Ashland, KY, 1643 Greenup Avenue;
Zone 2 - 10 to 50 mi. radius of union hall;
Zone 3 - 50 mi. radius and beyond.

TRANSPORTATION CABINET
DIVISION OF CONSTRUCTION PROCUREMENT
COMPLIANCE SECTION
PROJECT WAGE RATES

	HIGHWAY BASIC HOURLY RATES	FRINGE BENEFIT PAYMENTS COMBINED
CRAFTS: (continued)		
Anderson, Breckinridge, Bullitt, Carroll, Grayson, Hardin, Henry, Jefferson, Larue, Marion, Meade, Nelson, Oldham, Shelby, Spencer, Trimble and Washington Counties:		
Painters:		
Brush & Roller	18.50	9.84
Spray, Sand Blast, Power Tools, Water Blast & Steam Cleaning	19.50	9.84
Bracken, Gallatin, Grant, Mason, and Owen Counties:		
Painters:		
(Heavy and Highway Bridges-Guardrails–Lightpoles-Striping):		
Bridge/Equipment Tender and Containment Builder	20.49	6.83
Brush and Roller	23.10	6.83
Elevated Tanks; Steeplejack Work; Bridge & Lead Abatement	24.10	6.83
Sand Blasting & Water Blasting	23.85	6.83
Spray	23.60	6.83
Bath, Bourbon, Boyle, Clark, Fayette, Fleming, Franklin, Harrison, Jessamine, Madison, Mercer, Montgomery, Nicholas, Robertson, Scott and Woodford Counties		
Painters:		
Brush & Roller	21.30	5.90
Elevated Tanks; Steeplejack Work; Bridge & Lead Abatement	22.30	5.90
Sandblasting & Waterblasting	22.05	5.90
Spray	21.80	5.90
Bridge/Equipment Tender and/or Containment Builder	18.90	5.90
Boyd, Carter, Elliott, Greenup, Lewis and Rowan Counties		
Painters:		
Bridges	27.83	10.00
All Other Work	24.83	10.00

TRANSPORTATION CABINET
DIVISION OF CONSTRUCTION PROCUREMENT
COMPLIANCE SECTION
PROJECT WAGE RATES

	HIGHWAY BASIC HOURLY RATES	FRINGE BENEFIT PAYMENTS COMBINED

CRAFTS: (continued)

Breckinridge, Bullitt, Carroll (Western Half), Franklin (Western three-fourths), Grayson, Hardin, Henry, Jefferson, Larue, Marion, Meade, Nelson, Oldham, Shelby, Spencer, Trimble and Washington Counties:

Plumber ..... 30.00 ..... 14.17

Boyd, Carter, Elliott, Greenup, Lewis and Rowan Counties:

Plumbers and Steamfitters ..... 30.45 ..... 14.57

Bracken, Carroll (Eastern Half), Gallatin, Grant, Mason, Owen and Robertson Counties:

Pipefitters and Plumbers ..... 28.39 ..... 14.30

LABORERS:

Bath, Bourbon, Boyd, Boyle, Bracken, Carter, Clark, Elliott, Fayette, Fleming, Franklin, Gallatin, Grant, Greenup, Harrison, Jessamine, Lewis, Madison, Mason, Mercer, Montgomery, Nicholas, Owen, Robertson, Rowan, Scott, & Woodford Counties:

GROUP 1 - Aging and Curing of Concrete, Asbestos Abatement Worker, Asphalt Plant, Asphalt, Batch Truck Dump, Carpenter Tender, Cement Mason Tender, Cleaning of Machines, Concrete, Demolition, Dredging, Environmental - Nuclear, Radiation, Toxic and Hazardous Waste - Level D, Flagperson, Grade Checker, Hand Digging and Hand Back Filling, Highway Marker Placer, Landscaping Mesh Handler and Placer, Puddler, Railroad, Rip-Rap and Grouter, Right-of-Way Sign, Guard rail and Fence Installer, Signal Person, Sound Barrier Installer, Storm and Sanitary Sewer, Swamper, Truck Spotter and Dumper, and Wrecking of Concrete Forms, General Cleanup.

BASE RATE 20.36
FRINGE BENEFITS 9.90

Group 2 - Batter Board Man (Sanitary And Storm Sewer), Brickmason Tender, Mortar Mixer Operator, Scaffold Builder, Burner and Welder, Bushammer, Chain Saw Operator, Concrete Saw Operator, Deckhand Scow Man, Dry Cement Handler, Environmental - Nuclear, Radiation, Toxic and Hazardous Waste - Level C, Forklift Operator for Masonary, Form Setter, Green Concrete Cutting, Hand Operated Grouter and Grinder Machine Operator, Jackhammer, Pavement Breaker, Paving Joint Machine, Pipelayer, Plastic Pipe Fusion, Power Driven Georgia Buggy and Wheel Barrow, Power Post Hole Digger, Precast Manhole Setter, Walk-Behind Tamper, Walk-Behind Trencher, Sand Blaster, Concrete Chipper, Surface Grinder, Vibrator Operator and Wagon Driller.

BASE RATE 20.61
FRINGE BENEFITS 9.90

TRANSPORTATION CABINET
DIVISION OF CONSTRUCTION PROCUREMENT
COMPLIANCE SECTION
PROJECT WAGE RATES

LABORERS: (continued)
GROUP 3 - Asphalt Luteman and Raker, Gunnite Nozzleman, Gunnite Operator and Mixer, Grout Pump Operator, Side Rail Setter, Rail Paved Ditch, Screw Operator, Tunnel (Free Air) and Water Blaster.

BASE RATE 20.66
FRINGE BENEFITS 9.90

GROUP 4 - Caisson Worker (Free Air), Cement Finisher, Environmental - Nuclear, Radiation, Toxic and Hazardous Waste - Levels A and B, Miner and Driller (Free Air), Tunnel Blaster and Tunnel Mucker (Free Air), Directional & Horizontal Boring, Air Track Drillers (all types), Powdermen & Blasters, Troxler & Concrete Tester if Laborer is Utilized.

BASE RATE 21.26
FRINGE BENEFITS 9.90

LABORERS:
Anderson, Bullitt, Carroll, Hardin, Henry, Jefferson, Larue, Marion, Meade, Nelson, Oldham, Shelby, Spencer, Trimble & Washington Counties:

GROUP 1 - Aging and Curing of Concrete, Asbestos Abatement Worker, Asphalt Plant, Asphalt, Batch Truck Dump, Carpenter Tender, Cement Mason Tender, Cleaning of Machines, Concrete, Demolition, Dredging, Environmental - Nuclear, Radiation, Toxic and Hazardous Waste - Level D, Flagperson, Grade Checker, Hand Digging and Hand Back Filling, Highway Marker Placer, Landscaping Mesh Handler and Placer, Puddler, Railroad, Rip-Rap and Grouter, Right-of-Way Sign, Guardrail and Fence Installer, Signal Person, Sound Barrier Installer, Storm and Sanitary Sewer, Swamper, Truck Spotter and Dumper, and Wrecking of Concrete Forms, General Cleanup.

BASE RATE 20.51
FRINGE BENEFITS 9.75

Group 2 - Batter Board Man (Sanitary And Storm Sewer), Brickmason Tender, Mortar Mixer Operator, Scaffold Builder, Burner and Welder, Bushammer, Chain Saw Operator, Concrete Saw Operator, Deckhand Scow Man, Dry Cement Handler, Environmental - Nuclear, Radiation, Toxic and Hazardous Waste - Level C, Forklift Operator for Masonary, Form Setter, Green Concrete Cutting, Hand Operated Grouter and Grinder Machine Operator, Jackhammer, Pavement Breaker, Paving Joint Machine, Pipelayer, Plastic Pipe Fusion, Power Driven Georgia Buggy and Wheel Barrow, Power Post Hole Digger, Precast Manhole Setter, Walk-Behind Tamper, Walk-Behind Trencher, Sand Blaster, Concrete Chipper, Surface Grinder, Vibrator Operator and Wagon Driller.

BASE RATE 20.76
FRINGE BENEFITS 9.75

TRANSPORTATION CABINET
DIVISION OF CONSTRUCTION PROCUREMENT
COMPLIANCE SECTION
PROJECT WAGE RATES

LABORERS: (continued)
GROUP 3 - Asphalt Luteman and Raker, Gunnite Nozzleman, Gunnite Operator and Mixer, Grout Pump Operator, Side Rail Setter, Rail Paved Ditch, Screw Operator, Tunnel (Free Air) and Water Blaster.

BASE RATE 20.81
FRINGE BENEFITS 9.75

GROUP 4 - Caisson Worker (Free Air), Cement Finisher, Environmental - Nuclear, Radiation, Toxic and Hazardous Waste - Levels A and B, Miner and Driller (Free Air), Tunnel Blaster and Tunnel Mucker (Free Air), Directional & Horizontal Boring, Air Track Drillers (all types), Powdermen & Blasters, Troxler & Concrete Tester if Laborer is Utilized.

BASE RATE 21.41
FRINGE BENEFITS 9.75

LABORERS:
Breckinridge & Grayson Counties:
GROUP 1 - Aging and curing of concrete, Asbestos Abatement Worker, Asphalt Plant, Asphalt, Batch Truck Dump, Carpenter Tender, Cement Mason Tender, Cleaning of Machines, Concrete, Demolition, Dredging, Environmental - Nuclear, Radiation, Toxic and Hazardous Waste - Level D, Flagperson, Grade Checker, Hand Digging and Hand Back Filling, Highway Marker Placer, Landscaping Mesh Handler and Placer, Puddler, Railroad, Rip-Rap and Grouter, Right-of-Way Sign, Guard rail and Fence Installer, Signal Person, Sound Barrier Installer, Storm and Sanitary Sewer, Swamper, Truck Spotter and Dumper, and Wrecking of Concrete Forms, General Cleanup.

BASE RATE 20.76
FRINGE BENEFITS 9.50

Group 2 - Batter Board Man (Sanitary And Storm Sewer), Brickmason Tender, Mortar Mixer Operator, Scaffold Builder, Burner and Welder, Bushammer, Chain Saw Operator, Concrete Saw Operator, Deckhand Scow Man, Dry Cement Handler, Environmental - Nuclear, Radiation, Toxic and Hazardous Waste - Level C, Forklift Operator for Masonary, Form Setter, Green Concrete Cutting, Hand Operated Grouter and Grinder Machine Operator, Jackhammer, Pavement Breaker, Paving Joint Machine, Pipelayer, Plastic Pipe Fusion, Power Driven Georgia Buggy and Wheel Barrow, Power Post Hole Digger, Precast Manhole Setter, Walk-Behind Tamper, Walk-Behind Trencher, Sand Blaster, Concrete Chipper, Surface Grinder, Vibrator Operator and Wagon Driller.

BASE RATE 21.01
FRINGE BENEFITS 9.50

TRANSPORTATION CABINET
DIVISION OF CONSTRUCTION PROCUREMENT
COMPLIANCE SECTION
PROJECT WAGE RATES

LABORERS: (continued)
GROUP 3 - Asphalt Luteman and Raker, Gunnite Nozzleman, Gunnite Operator and Mixer, Grout Pump Operator, Side Rail Setter, Rail Paved Ditch, Screw Operator, Tunnel (Free Air) and Water Blaster.

BASE RATE 21.06
FRINGE BENEFITS 9.50

GROUP 4 - Caisson Worker (Free Air), Cement Finisher, Environmental - Nuclear, Radiation, Toxic and Hazardous Waste - Levels A and B, Miner and Driller (Free Air), Tunnel Blaster and Tunnel Mucker (Free Air), Directional & Horizontal Boring, Air Track Drillers (all types), Powdermen & Blasters, Troxler & Concrete Tester if Laborer is Utilized.

BASE RATE 21.66
FRINGE BENEFITS 9.50

TRUCK DRIVER CLASSIFICATIONS: **TEAMSTERS** **BASE RATE**
GROUP 1 - Mobile Batch Truck Tender..... ……..... 16.57

GROUP 2 - Greaser, Tire Changer and Mechanic Tender..... 16.68

GROUP 3 - Single Axle Dump, Flatbed, Semi-trailer or Pole Trailer when used to pull building materials and equipment, Tandem Axle Dump, Distributor, Mixer and
Truck Mechanic..... ..... 16.86

GROUP 4 - Euclid & Other Heavy Earthmoving Equipment & Lowboy, Articulator Cat, 5-Axle Vehicle, Winch & A-Frame when used in transporting materials, Ross Carrier, Forklift when used to transport building materials and Pavement Breaker.....16.96

FRINGE BENEFITS.....7.34

OPERATING ENGINEERS:
A-Frame Winch Truck, Auto Patrol, Backfiller, Batcher Plant, Bituminous Paver, Bituminous Transfer Machine, Boom Cat, Bulldozer, Mechanic, Cableway, Carry-All Scoop, Carry Deck Crane, Central Compressor Plant, Clamshell, Concrete Mixer (21 Cu. Ft. or Over), Concrete Paver, Truck-Mounted Concrete Pump, Core Drill, Crane, Crusher Plant, Derrick, Derrick Boat, Ditching and Trenching Machine, Dragline, Dredge Operator, Dredge Engineer, Elevating Grader and Loaders, Grade-All, Gurries, Heavy Equipment Robotics Operator/Mechanic, High Lift, Hoe-Type Machine, Hoist (two or more drums), Hoisting Engine (two or more drums), Horizontal Directional Drill Operator, Hydrocrane, Hyster, Kecal Loader, Letourneau, Locomotive,

TRANSPORTATION CABINET
DIVISION OF CONSTRUCTION PROCUREMENT
COMPLIANCE SECTION
PROJECT WAGE RATES

OPERATING ENGINEERS: (continued)

Mechanically Operated Laser Screed, Mechanic Welder, Mucking Machine, Motor Scraper, Orangepeel Bucket, Piledriver, Power Blade, Pumpcrete, Push Dozer, Rock Spreader Attached to Equipment, Rotary Drill, Roller (Bituminous), Scarifier, Scoopmobile, Shovel, Side Boom, Subgrader, Tailboom, Telescoping Type Forklift, Tow or Push Boat, Tower Crane (French, German and other types), Tractor Shovel and Truck Crane, Tunnel Mining Machines, Including Moles, Shields or similar types of Tunnel Mining Equipment.

BASE RATE 24.60
FRINGE BENEFITS 12.65

Air Compressor (over 900 cu. ft. per min.), Bituminous Mixer, Boom Type Tamping Machine, Bull Float, Concrete Mixer (under 21 cu. ft.), Dredge Engineer, Electric Vibrator Compactor/Self-Propelled Compactor, Elevator (one drum or Buck Hoist), Elevator (when used to hoist building material), Finish Machine, Fireman & Hoist (one drum), Flexplane, Forklift (reguardless of lift height), Form Grader, Joint Sealing Machine, Outboard Motor Boat, Power Sweeper (riding type), Roller (rock), Ross Carrier, Skid Mounted Or Trailer Mounted Concrete Pump, Skid Steer Machine with all attachments, Switchman or Brakeman, Throttle Valve Person, Tractair and Road Widening Trencher, Tractor (50 H.P. or over), Truck Crane Oiler, Tugger, Welding Machine, Well Points and Whirley Oiler.

BASE RATE 22.18
FRINGE BENEFITS 12.65

All off road material handling equipment, including Articulating Dump Trucks, Greaser on Grease facilities servicing heavy equipment.

BASE RATE 22.56
FRINGE BENEFITS 12.65

Bituminous Distributor, Burlap and Curing Machine, Cement Gun, Concrete Saw, Conveyor, Deckhand Oiler, Grout Pump, Hydraulic Post Driver, Hydro Seeder, Mud Jack, Oiler, Paving Joint Machine, Power Form Handling Equipment, Pump, Roller (Earth), Steerman, Tamping Machine, Tractor (under 50 H.P.) and Vibrator.

BASE RATE 21.92
FRINGE BENEFITS 12.65

Cranes - with Booms 150 ft. and over (including jib), and where the length of the Boom in combination with the length of the piling leads equals or exceeds 150 ft. - $1.00 over Group 1 rate.

TRANSPORTATION CABINET
DIVISION OF CONSTRUCTION PROCUREMENT
COMPLIANCE SECTION
PROJECT WAGE RATES

Employees assigned to work below ground level are to be paid 10% above basic wage rate. This does not apply to open cut work.

WELDERS - Receive rate for craft in which welding is incidental.

Fringe benefit amounts are applicable for all hours worked except when otherwise noted.

These rates are listed pursuant to Kentucky Determination No. CR-09-III HWY dated July 1, 2009 and/or Federal Decision Number KY20080027 dated February 8, 2008 modification #0 dated February 8, 2008, modification #1 dated March 7, 2008, modification #2 dated April 4, 2008, modification #3 dated May 2, 2008, modification #4 dated June 6, 2008, modification #5 dated July 4, 2008, modification #6 dated August 1, 2008, modification #7 dated August 15, 2008, modification #8 dated September 5, 2008, modification #9 dated October 3, 2008, modification #10 dated December 5, 2008, modification #11 dated January 2, 2009, modification #12 dated February 6, 2009, modification #13 dated March 6, 2009, modification #14 dated April 3, 2009, modification #15 dated June 5, 2009, modification #16 dated July 3, 2009, modification #17 dated July 24, 2009, modification #18 dated August 7, 2009, modification #19 dated September 4, 2009, modification #20 dated September 11, 2009, modification #21 dated October 16, 2009 and modification #22 dated December 4, 2009.

No Laborer, workman or mechanic shall be paid at a rate less than that of a Journeyman except those classified as bona fide apprentices.

Apprentices or trainees shall be permitted to work as such subject to Administrative Regulations adopted by the Commissioner of Workplace Standards. Copies of these regulations will be furnished upon request from any interested person.

Before using apprentices on the job the contractor shall present to the Contracting Officer written evidence of registration of such employees in a program of a State apprenticeship and training agency approved and recognized by the U. S. Bureau of Apprenticeship and Training. In the absence of such a State agency, the contractor shall submit evidence of approval and registration by the U. S. Bureau of Apprenticeship and Training.

The contractor shall submit to the Contracting Officer, written evidence of the established apprenticeship-journeyman ratios and wage rates in the project area, which will be the basis for establishing such ratios and rates for the project under the applicable contract provisions.

TRANSPORTATION CABINET
DIVISION OF CONSTRUCTION PROCUREMENT
COMPLIANCE SECTION
PROJECT WAGE RATES

TO: EMPLOYERS/EMPLOYEES

PREVAILING WAGE SCHEDULE:

The wages indicated on this wage schedule are the least permitted to be paid for the occupations indicated. When an employee works in more than one classification, the employer must record the number of hours worked in each classification at the prescribed hourly base rate.

OVERTIME:

Overtime is to be paid after an employee works eight (8) hours a day or forty (40) hours a week, whichever gives the employee the greater wages. At least time and one-half the base rate is required for all overtime. A laborer, workman or mechanic and an employer may enter into a written agreement or a collective bargaining agreement to work more than eight (8) hours a calendar day but not more than ten (10) hours a calendar day for the straight time hourly rate. Wage violations or questions should be directed to the designated Engineer or the undersigned.

Ryan Griffith, Director
Division of Construction Procurement

Frankfort, Kentucky 40622

NOTICE OF REQUIREMENT FOR AFFIRMATIVE ACTION TO ENSURE EQUAL EMPLOYMENT OPPORTUNITY (Executive Order 11246)

1. The Offeror's or Bidder's attention is called to the "Equal Opportunity Clause" and the "Standard Federal Equal Employment Specifications" set forth herein.

2. The goals and timetables for minority and female participation, expressed in percentage terms for the Contractor's aggregate work force in each trade on all construction work in the covered area, are as follows:

GOALS FOR MINORITY PARTICIPATION IN EACH TRADE	GOALS FOR FEMALE PARTICIPATION IN EACH TRADE
11.2%	6.9%

These goals are applicable to all the Contractor's construction work (whether or not it is Federal or federally-assisted) performed in the covered area. If the contractor performs construction work in a geographical area located outside of the covered area, it shall apply the goals established for such geographical area where the work is actually performed. With regard to this second area, the contractor also is subject to the goals for both its federally involved and non-federally involved construction.

The Contractor's compliance with the Executive Order and the regulations in CFR Part 60-4 shall be based on its implementation of the Equal Opportunity Clause, specific affirmative action obligations required by the specifications set forth in 41 CFR 60-4, 3(a), and its efforts to meet the goals. The hours of minority and female employment and training must be substantially uniform throughout the length of the contract, and in each trade, and the contractor shall make a good faith effort to employ minorities and women evenly on each of its projects. The transfer of minority or female employees or trainees from Contractor to Contractor or from project to project for the sole purpose of meeting the Contractor's goals shall be a violation of the contract, the Executive Order and the regulations in 41 CFR Part 60-4. Compliance with the goals will be measured against the total work hours performed.

3. The Contractor shall provide written notification to the Director of the Office of Federal Contract Compliance Programs within ten (10) working days of award of any construction subcontract in excess of $10,000.00 at any tier for construction work under the contract resulting from this solicitation. The notification shall list the name, address and telephone number of the subcontractor; employer identification number of the subcontractor; estimated dollar amount of the subcontract; estimated starting and completion dates of the subcontract; and the geographical area in which the subcontract is to be performed. The notification shall be mailed to:

Evelyn Teague, Regional Director
Office of Federal Contract Compliance Programs
61 Forsyth Street, SW, Suite 7B75
Atlanta, Georgia 30303-8609

4. As used in this Notice, and in the contract resulting from this solicitation, the **"covered area"** is Oldham County.

PART IV

INSURANCE

INSURANCE

The Contractor shall carry the following insurance in addition to the insurance required by law:

1. Contractor's Public Liability Insurance not less than $100,000.00 for damages arising out of bodily injuries to or death to one person. Not less than $300,000.00 for damages arising out of bodily injuries to or death to two or more persons.

2. Contractor's Property Damages Liability Insurance. Not less than $100,000.00 for all damages arising out of injury or destruction of property in any one accident. Not less than $300,000.00 for all damages during the policy period.

3. Contractor's Protective Public Liability and Property Damage Insurance. The contractor shall furnish evidence with respect to operations performed for him by subcontractors that he carries in his own behalf for the above stipulated amounts.

4. The insurance required above must be evidenced by a Certificate of Insurance and this Certificate of Insurance must contain one of the following statements:

   a. "policy contains no deductible clauses."

   b. "policy contains _____ (amount) deductible property damage clause but company will pay claim and collect the deductible from the insured."

5. WORKMEN'S COMPENSATION INSURANCE. The contractor shall furnish evidence of coverage of all his employees or give evidence of self-insurance by submitting a copy of a certificate issued by the Workmen's Compensation Board.

PART V

BID ITEMS

KENTUCKY TRANSPORTATION CABINET
DEPARTMENT OF HIGHWAYS
FRANKFORT, KY 40622

CONTRACT ID: 101603
COUNTY: OLDHAM
PROPOSAL: ARRA 3001(394)

PAGE: 1
LETTING: 02/26/10
CALL NO: 174

LINE NO	ITEM	DESCRIPTION	APPROXIMATE UNIT QUANTITY	UNIT PRICE	AMOUNT
	SECTION 0001	ROADWAY			
0010	01982	DELINEATOR FOR GUARDRAIL-WHITE	20.000 EACH		
0020	02351	GUARDRAIL-STEEL W BEAM-S FACE	1,280.000 LF		
0030	02360	GUARDRAIL TERMINAL SECTION NO 1	3.000 EACH		
0040	02371	GUARDRAIL END TREATMENT TYPE 7	25.000 EACH		
0050	02562	SIGNS	341.000 SQFT		
0060	02650	MAINTAIN & CONTROL TRAFFIC	(1.00) LS		
	SECTION 0002	DEMOLIZATION			
0070	02569	DEMOBILIZATION (AT LEAST 1.5%)	LUMP		
		TOTAL BID			