CALL NO. 102

CONTRACT ID. 141266

GRANT COUNTY

FED/STATE PROJECT NUMBER NHPP IM 0757 (140)

DESCRIPTION I-75 GRANT COUNTY

WORK TYPE ASPHALT RESURFACING

PRIMARY COMPLETION DATE 7/31/2015

LETTING DATE: September 26,2014

Sealed Bids will be received electronically through the Bid Express bidding service until 10:00 AM EASTERN DAYLIGHT TIME September 26,2014. Bids will be publicly announced at 10:00 AM EASTERN DAYLIGHT TIME.

NO PLANS ASSOCIATED WITH THIS PROJECT.

DBE CERTIFICATION REQUIRED - 2%

REQUIRED BID PROPOSAL GUARANTY: Not less than 5% of the total bid.

TABLE OF CONTENTS

PART I SCOPE OF WORK

- PROJECT(S), COMPLETION DATE(S), & LIQUIDATED DAMAGES
- CONTRACT NOTES
- FEDERAL CONTRACT NOTES
- EXPEDITE WORK ORDER
- ASPHALT MIXTURE
- INCIDENTAL SURFACING
- FUEL AND ASPHALT PAY ADJUSTMENT
- SPECIAL NOTE(S) APPLICABLE TO PROJECT
- RIGHT OF WAY NOTES

PART II SPECIFICATIONS AND STANDARD DRAWINGS

- SPECIFICATIONS REFERENCE
- SUPPLEMENTAL SPECIFICATION

PART III EMPLOYMENT, WAGE AND RECORD REQUIREMENTS

- FEDERAL-AID CONSTRUCTION CONTRACTS - FHWA 1273
- NONDISCRIMINATION OF EMPLOYEES
- EXECUTIVE BRANCH CODE OF ETHICS
- PROJECT WAGE RATES LOCALITY 3 / FEDERAL & STATE
- NOTICE OF REQUIREMENT FOR AFFIRMATIVE ACTION TO ENSURE EEO GRANT

PART IV INSURANCE

PART V BID ITEMS

PART I

SCOPE OF WORK

ADMINISTRATIVE DISTRICT - 06

CONTRACT ID - 141266

NHPP IM 0757 (140)

COUNTY - GRANT

PCN - DE04100751466
NHPP IM 0757 (140)

I-75 GRANT COUNTY MILL THIN AND ASPHALT OVERLAY ON I-75 NORTH/SOUTHBOUND LANES FROM JUST NORHT OF KY 2937 (MP 152.400) TO GRANT/KENTON COUNTY LINE (MP 166.263) IN GRANT COUNTY., A DISTANCE OF 013.86 MILES.ASPHALT RESURFACING SYP NO. 06-02047.00.

GEOGRAPHIC COORDINATES LATITUDE 38:38:00.00 LONGITUDE 84:38:00.00

COMPLETION DATE(S):

COMPLETED BY 11/30/2014	INTERMEDIATE MILESTONE - BASE FAILURE REPAIR COMPLETION
COMPLETED BY 07/31/2015	APPLIES TO ENTIRE CONTRACT

CONTRACT NOTES

PROPOSAL ADDENDA

All addenda to this proposal must be applied when calculating bid and certified in the bid packet submitted to the Kentucky Department of Highways. Failure to use the correct and most recent addenda may result in the bid being rejected.

BID SUBMITTAL

Bidder must use the Department's Expedite Bidding Program available on the Internet web site of the Department of Highways, Division of Construction Procurement. (www.transportation.ky.gov/construction-procurement)

The Bidder must download the bid file located on the Bid Express website (www.bidx.com) to prepare a bid packet for submission to the Department. The bidder must submit electronically using Bid Express.

JOINT VENTURE BIDDING

Joint venture bidding is permissible. All companies in the joint venture must be prequalified in one of the work types in the Qualifications for Bidders for the project. The bidders must get a vendor ID for the joint venture from the Division of Construction Procurement and register the joint venture as a bidder on the project. Also, the joint venture must obtain a digital ID from Bid Express to submit a bid. A joint bid bond of 5% may be submitted for both companies or each company may submit a separate bond of 5%.

UNDERGROUND FACILITY DAMAGE PROTECTION

The contractor is advised that the Underground Facility Damage Protection Act of 1994, became law January 1, 1995. It is the contractor's responsibility to determine the impact of the act regarding this project, and take all steps necessary to be in compliance with the provision of the act.

SPECIAL NOTE FOR PIPE INSPECTION

Contrary to Section 701.03.08 of the 2012 Standard Specifications for Road and Bridge Construction and Kentucky Method 64-114, certification by the Kentucky Transportation Center for prequalified Contractors to perform laser/video inspection is not required on this contract. It will continue to be a requirement for the Contractor performing any laser/video pipe inspection to be prequalified for this specialized item with the Kentucky Transportation Cabinet-Division of Construction Procurement.

SPECIAL NOTE FOR COMPOSITE OFFSET BLOCKS

Contrary to the Standard Drawings (2012 edition) the Cabinet will allow 6" composite offset blocks in lieu of wooden offset blocks, except as specified on proprietary end treatments and crash cushions. The composite blocks shall be selected from the Cabinet's List of Approved Materials.

REGISTRATION WITH THE SECRETARY OF STATE BY A FOREIGN ENTITY

Pursuant to KRS 176.085(1)(b), an agency, department, office, or political subdivision of the Commonwealth of Kentucky shall not award a state contract to a person that is a foreign entity required by KRS 14A.9-010 to obtain a certificate of authority to transact business in the Commonwealth ("certificate") from the Secretary of State under KRS 14A.9-030 unless the person produces the certificate within fourteen (14) days of the bid or proposal opening. If the foreign entity is not required to obtain a certificate as provided in KRS 14A.9-010, the foreign entity should identify the applicable exception. Foreign entity is defined within KRS 14A.1-070.

For all foreign entities required to obtain a certificate of authority to transact business in the Commonwealth, if a copy of the certificate is not received by the contracting agency within the time frame identified above, the foreign entity's solicitation response shall be deemed non-responsive or the awarded contract shall be cancelled.

Businesses can register with the Secretary of State at https://secure.kentucky.gov/sos/ftbr/welcome.aspx .

SPECIAL NOTE FOR PROJECT QUESTIONS DURING ADVERTISEMENT

Questions about projects during the advertisement should be submitted in writing to the Division of Construction Procurement. This may be done by fax (502) 564-7299 or email to kytc.projectquestions@ky.gov. The Department will attempt to answer all submitted questions. The Department reserves the right not to answer if the question is not pertinent or does not aid in clarifying the project intent.

The deadline for posting answers will be 3:00 pm Eastern Daylight Time, the day preceding the Letting. Questions may be submitted until this deadline with the understanding that the later a question is submitted, the less likely an answer will be able to be provided.

The questions and answers will be posted for each Letting under the heading "Questions & Answers" on the Construction Procurement website (www.transportation.ky.gov/contract). The answers provided shall be considered part of

this Special Note and, in case of a discrepancy, will govern over all other bidding documents.

HARDWOOD REMOVAL RESTRICTIONS

The US Department of Agriculture has imposed a quarantine in Kentucky and several surrounding states, to prevent the spread of an invasive insect, the emerald ash borer. Hardwood cut in conjunction with the project may not be removed from the state. Chipping or burning on site is the preferred method of disposal.

INSTRUCTIONS FOR EXCESS MATERIAL SITES AND BORROW SITES

Identification of excess material sites and borrow sites shall be the responsibility of the Contractor. The Contractor shall be responsible for compliance with all applicable state and federal laws and may wish to consult with the US Fish and Wildlife Service to seek protection under Section 10 of the Endangered Species Act for these activities.

ACCESS TO RECORDS

The contractor, as defined in KRS 45A.030 (9) agrees that the contracting agency, the Finance and Administration Cabinet, the Auditor of Public Accounts, and the Legislative Research Commission, or their duly authorized representatives, shall have access to any books, documents, papers, records, or other evidence, which are directly pertinent to this contract for the purpose of financial audit or program review. Records and other prequalification information confidentially disclosed as part of the bid process shall not be deemed as directly pertinent to the contract and shall be exempt from disclosure as provided in KRS 61.878(1)(c). The contractor also recognizes that any books, documents, papers, records, or other evidence, received during a financial audit or program review shall be subject to the Kentucky Open Records Act, KRS 61.870 to 61.884.

In the event of a dispute between the contractor and the contracting agency, Attorney General, or the Auditor of Public Accounts over documents that are eligible for production and review, the Finance and Administration Cabinet shall review the dispute and issue a determination, in accordance with Secretary's Order 11-004. (See attachment)

10/29/12

Commonwealth of Kentucky
Finance and Administration Cabinet
OFFICE OF THE SECRETARY
Room 383, Capitol Annex
702 Capital Avenue
Frankfort, KY 40601-3462
(502) 564-4240
Fax (502) 564-6785

Steven L. Beshear
Governor

Lori H. Flanery
Secretary

SECRETARY'S ORDER 11-004

FINANCE AND ADMINISTRATION CABINET

Vendor Document Disclosure

WHEREAS, in order to promote accountability and transparency in governmental operations, the Finance and Administration Cabinet believes that a mechanism should be created which would provide for review and assistance to an Executive Branch agency if said agency cannot obtain access to documents that it deems necessary to conduct a review of the records of a private vendor that holds a contract to provide goods and/or services to the Commonwealth; and

WHEREAS, in order to promote accountability and transparency in governmental operations, the Finance and Administration Cabinet believes that a mechanism should be created which would provide for review and assistance to an Executive Branch agency if said agency cannot obtain access to documents that it deems necessary during the course of an audit, investigation or any other inquiry by an Executive Branch agency that involves the review of documents; and

WHEREAS, KRS 42.014 and KRS 12.270 authorizes the Secretary of the Finance and Administration Cabinet to establish the internal organization and assignment of functions which are not established by statute relating to the Finance and Administration Cabinet; further, KRS Chapter 45A.050 and 45A.230 authorizes the Secretary of the Finance and Administration Cabinet to procure, manage and control all supplies and services that are procured by the Commonwealth and to intervene in controversies among vendors and state agencies; and

NOW, THEREFORE, pursuant to the authority vested in me by KRS 42.014, KRS 12.270, KRS 45A.050, and 45A.230, I, Lori H. Flanery, Secretary of the Finance and Administration Cabinet, do hereby order and direct the following:

I. Upon the request of an Executive Branch agency, the Finance and Administration Cabinet ("FAC") shall formally review any dispute arising where the agency has requested documents from a private vendor that holds a state contract and the vendor has refused access to said documents under a claim that said documents are not directly pertinent or relevant to the agency's inquiry upon which the document request was predicated.

II. Upon the request of an Executive Branch agency, the FAC shall formally review any situation where the agency has requested documents that the agency deems necessary to

conduct audits, investigations or any other formal inquiry where a dispute has arisen as to what documents are necessary to conclude the inquiry.

III. Upon receipt of a request by a state agency pursuant to Sections I & II, the FAC shall consider the request from the Executive Branch agency and the position of the vendor or party opposing the disclosure of the documents, applying any and all relevant law to the facts and circumstances of the matter in controversy. After FAC's review is complete, FAC shall issue a Determination which sets out FAC's position as to what documents and/or records, if any, should be disclosed to the requesting agency. The Determination shall be issued within 30 days of receipt of the request from the agency. This time period may be extended for good cause.

IV. If the Determination concludes that documents are being wrongfully withheld by the private vendor or other party opposing the disclosure from the state agency, the private vendor shall immediately comply with the FAC's Determination. Should the private vendor or other party refuse to comply with FAC's Determination, then the FAC, in concert with the requesting agency, shall effectuate any and all options that it possesses to obtain the documents in question, including, but not limited to, jointly initiating an action in the appropriate court for relief.

V. Any provisions of any prior Order that conflicts with the provisions of this Order shall be deemed null and void.

FEDERAL CONTRACT NOTES

The Kentucky Department of Highways, in accordance with the Regulations of the United States Department of Transportation 23 CFR 635.112 (h), hereby notifies all bidders that failure by a bidder to comply with all applicable sections of the current Kentucky Standard Specifications, including, but not limited to the following, may result in a bid not being considered responsive and thus not eligible to be considered for award:

102.02 Current Capacity Rating 102.10 Delivery of Proposals
102.08 Irregular Proposals 102.14 Disqualification of Bidders
102.09 Proposal Guaranty

CIVIL RIGHTS ACT OF 1964

The Kentucky Department of Highways, in accordance with the provisions of Title VI of the Civil Rights Act of 1964 (78 Stat. 252) and the Regulations of the Federal Department of Transportation (49 C.F.R., Part 21), issued pursuant to such Act, hereby notifies all bidders that it will affirmatively insure that the contract entered into pursuant to this advertisement will be awarded to the lowest responsible bidder without discrimination on the ground of race, color, or national origin.

NOTICE TO ALL BIDDERS

To report bid rigging activities call: 1-800-424-9071.

The U.S. Department of Transportation (DOT) operates the above toll-free "hotline" Monday through Friday, 8:00 a.m. to 5:00 p.m. eastern time. Anyone with knowledge of possible bid rigging, bidder collusion, or other fraudulent activities should use the "hotline" to report such activities.

The "hotline" is part of the DOT's continuing effort to identify and investigate highway construction contract fraud and abuse and is operated under the direction of the DOT Inspector General. All information will be treated confidentially and caller anonymity will be respected.

SECOND TIER SUBCONTRACTS

Second Tier subcontracts on federally assisted projects shall be permitted. However, in the case of DBE's, second tier subcontracts will only be permitted where the other subcontractor is also a DBE. All second tier subcontracts shall have the consent of both the Contractor and the Engineer.

DISADVANTAGED BUSINESS ENTERPRISE PROGRAM

It is the policy of the Kentucky Transportation Cabinet ("the Cabinet") that Disadvantaged Business Enterprises ("DBE") shall have the opportunity to participate in the performance of highway construction projects financed in whole or in part by Federal Funds in order to create a level playing field for all businesses who wish to contract with the Cabinet. To that end, the Cabinet will comply with the regulations found in 49 CFR Part 26, and the definitions and requirements contained therein shall be adopted as if set out verbatim herein.

The Cabinet, contractors, subcontractors, and sub-recipients shall not discriminate on the basis of race, color, national origin, or sex in the performance of work performed pursuant to Cabinet contracts. The contractor shall carry out applicable requirements of 49 CFR 26 in the award and administration of federally assisted highway construction projects. The contractor will include this provision in all its subcontracts and supply agreements pertaining to contracts with the Cabinet.

Failure by the contractor to carry out these requirements is a material breach of its contract with the Cabinet, which may result in the termination of the contract or such other remedy as the Cabinet deems necessary.

DBE GOAL

The Disadvantaged Business Enterprise (DBE) goal established for this contract, as listed on the front page of the proposal, is the percentage of the total value of the contract.

The contractor shall exercise all necessary and reasonable steps to ensure that Disadvantaged Business Enterprises participate in a least the percent of the contract as set forth above as goals for this contract.

OBLIGATION OF CONTRACTORS

Each contractor prequalified to perform work on Cabinet projects shall designate and make known to the Cabinet a liaison officer who is assigned the responsibility of effectively administering and promoting an active program for utilization of DBEs.

If a formal goal has not been designated for the contract, all contractors are encouraged to consider DBEs for subcontract work as well as for the supply of material and services needed to perform this work.

Contractors are encouraged to use the services of banks owned and controlled by minorities and women.

CERTIFICATION OF CONTRACT GOAL

Contractors shall include the following certification in bids for projects for which a DBE goal has been established. BIDS SUBMITTED WHICH DO NOT INCLUDE CERTIFICATION OF DBE PARTICIPATION WILL NOT BE ACCEPTED. These bids will not be considered for award by the Cabinet and they will be returned to the bidder.

"The bidder certifies that it has secured participation by Disadvantaged Business Enterprises ("DBE") in the amount of ____ percent of the total value of this contract and that the DBE participation is in compliance with the requirements of 49 CFR 26 and the policies of the Kentucky Transportation Cabinet pertaining to the DBE Program."

The certification statement is located in the electronic bid file. All contractors must certify their DBE participation on that page. DBEs utilized in achieving the DBE goal must be certified and prequalified for the work items at the time the bid is submitted.

DBE PARTICIPATION PLAN

Lowest responsive bidders must submit the *DBE Plan/ Subcontractor Request*, form TC 63-35 DBE, within 10 days of the letting. This is necessary before the Awards Committee will review and make a recommendation. **The project will not be considered for award prior to submission and approval of the apparent low bidder's DBE Plan/Subcontractor Request.**

The DBE Participation Plan shall include the following:

1 Name and address of DBE Subcontractor(s) and/or supplier(s) intended to be used in the proposed project;
2 Description of the work each is to perform including the work item , unit, quantity, unit price and total amount of the work to be performed by the individual DBE. The Project Code Number (PCN), Category Number, and the Project Line Number can be found in the "material listing" on the Construction Procurement website under the specific letting;
3 The dollar value of each proposed DBE subcontract and the percentage of total project contract value this represents. DBE participation may be counted as follows; a) If DBE suppliers and manufactures assume actual and contractual responsibility, the dollar value of materials to be furnished will be counted toward the goal as follows:

- The entire expenditure paid to a DBE manufacturer;
- 60 percent of expenditures to DBE suppliers that are not manufacturers provided the supplier is a regular dealer in the product involved. A regular dealer must be engaged in, as its principal business and in its own name, the sale of products to

the public, maintain an inventory and own and operate distribution equipment; and

- The amount of fees or commissions charged by the DBE firms for a bona fide service, such as professional, technical, consultant, or managerial services and assistance in the procurement of essential personnel, facilities, equipment, materials, supplies, delivery of materials and supplies or for furnishing bonds, or insurance, providing such fees or commissions are determined to be reasonable and customary.

b) The dollar value of services provided by DBEs such as quality control testing, equipment repair and maintenance, engineering, staking, etc.;

c) The dollar value of joint ventures. DBE credit for joint ventures will be limited to the dollar amount of the work actually performed by the DBE in the joint venture;

4 Written and signed documentation of the bidder's commitment to use a DBE contractor whose participation is being utilized to meet the DBE goal; and

5 Written and signed confirmation from the DBE that it is participating in the contract as provided in the prime contractor's commitment.

UPON AWARD AND BEFORE A WORK ORDER WILL BE ISSUED

Contractors must submit the signed subcontract between the contractor and the DBE contractor, the DBE's certificate of insurance, and an affidavit for bidders, offerors, and contractors from the DBE to the Division of Construction Procurement. The affidavit can be found on the Construction Procurement website. If the DBE is a supplier of materials for the project, a signed purchase order and an affidavit for bidders, offerors, and contractors must be submitted to the Division of Construction Procurement.

Changes to DBE Participation Plans must be approved by the Cabinet. The Cabinet may consider extenuating circumstances including, but not limited to, changes in the nature or scope of the project, the inability or unwillingness of a DBE to perform the work in accordance with the bid, and/or other circumstances beyond the control of the prime contractor.

CONSIDERATION OF GOOD FAITH EFFORTS REQUESTS

If the DBE participation submitted in the bid by the apparent lowest responsive bidder does not meet or exceed the DBE contract goal, the apparent lowest responsive bidder must submit a Good Faith Effort Package to satisfy the Cabinet that sufficient good faith efforts were made to meet the contract goals prior to submission of the bid. Efforts to increase the goal after bid submission will not be considered in justifying the good faith effort, unless the contractor can show that the proposed DBE was solicited prior to the letting date. DBEs utilized in achieving the DBE goal must be certified and prequalified for the work items at the time the bid is submitted. One complete set and nine (9) copies of this information must be received in the

office of the Division of Contract Procurement no later than 12:00 noon of the tenth calendar day after receipt of notification that they are the apparent low bidder.

Where the information submitted includes repetitious solicitation letters it will be acceptable to submit a sample representative letter along with a distribution list of the firms solicited. Documentation of DBE quotations shall be a part of the good faith effort submittal as necessary to demonstrate compliance with the factors listed below which the Cabinet considers in judging good faith efforts. This documentation may include written subcontractors' quotations, telephone log notations of verbal quotations, or other types of quotation documentation.

The Good Faith Effort Package shall include, but may not be limited to information showing evidence of the following:

1 Whether the bidder attended any pre-bid meetings that were scheduled by the Cabinet to inform DBEs of subcontracting opportunities;
2 Whether the bidder provided solicitations through all reasonable and available means;
3 Whether the bidder provided written notice to all DBEs listed in the DBE directory at the time of the letting who are prequalified in the areas of work that the bidder will be subcontracting;
4 Whether the bidder followed up initial solicitations of interest by contacting DBEs to determine with certainly whether they were interested. If a reasonable amount of DBEs within the targeted districts do not provide an intent to quote or no DBEs are prequalified in the subcontracted areas, the bidder must notify the DBE Liaison in the Office of Minority Affairs to give notification of the bidder's inability to get DBE quotes;
5 Whether the bidder selected portions of the work to be performed by DBEs in order to increase the likelihood of meeting the contract goals. This includes, where appropriate, breaking out contract work items into economically feasible units to facilitate DBE participation, even when the prime contractor might otherwise perform these work items with its own forces;
6 Whether the bidder provided interested DBEs with adequate and timely information about the plans, specifications, and requirements of the contract;
7 Whether the bidder negotiated in good faith with interested DBEs not rejecting them as unqualified without sound reasons based on a thorough investigation of their capabilities. Any rejection should be so noted in writing with a description as to why an agreement could not be reached;
8 Whether quotations were received from interested DBE firms but were rejected as unacceptable without sound reasons why the quotations were considered unacceptable. The fact that the DBE firm's quotation for the work is not the lowest quotation received will not in itself be considered as a sound reason for rejecting the quotation as unacceptable. The fact that the bidder has the ability and/or desire to perform the contract work with its own forces will not be considered a sound reason for rejecting a DBE quote. Nothing in this provision shall be construed to require the bidder to accept unreasonable quotes in order to satisfy DBE goals;
9 Whether the bidder specifically negotiated with subcontractors to assume part of the responsibility to meet the contract DBE goal when the work to be subcontracted includes potential DBE participation;
10 Whether the bidder made any efforts and/or offered assistance to interested DBEs in obtaining the necessary equipment, supplies, materials, insurance and/or bonding to satisfy the

work requirements of the bid proposal; and

11 Any other evidence that the bidder submits which may show that the bidder has made reasonable good faith efforts to include DBE participation.

FAILURE TO MEET GOOD FAITH REQUIREMENT

Where the apparent lowest responsive bidder fails to submit sufficient participation by DBE firms to meet the contract goal and upon a determination by the Good Faith Committee based upon the information submitted that the apparent lowest responsive bidder failed to make sufficient reasonable efforts to meet the contract goal, the bidder will be offered the opportunity to meet in person for administrative reconsideration. The bidder will be notified of the Committee's decision within 24 hours of its decision. The bidder will have 24 hours to request reconsideration of the Committee's decision. The reconsideration meeting will be held within two days of the receipt of a request by the bidder for reconsideration.

The request for reconsideration will be heard by the Office of the Secretary. The bidder will have the opportunity to present written documentation or argument concerning the issue of whether it met the goal or made an adequate good faith effort. The bidder will receive a written decision on the reconsideration explaining the basis for the finding that the bidder did or did not meet the goal or made adequate Good Faith efforts to do so.

The result of the reconsideration process is not administratively appealable to the Cabinet or to the United States Department of Transportation.

The Cabinet reserves the right to award the contract to the next lowest responsive bidder or to rebid the contract in the event that the contract is not awarded to the low bidder as the result of a failure to meet the good faith requirement.

SANCTIONS FOR FAILURE TO MEET DBE REQUIREMENTS OF THE PROJECT

Failure by the prime contractor to fulfill the DBE requirements of a project under contract or to demonstrate good faith efforts to meet the goal constitutes a breach of contract. When this occurs, the Cabinet will hold the prime contractor accountable, as would be the case with all other contract provisions. Therefore, the contractor's failure to carry our the DBE contract requirements shall constitute a breach of contract and as such the Cabinet reserves the right to exercise all administrative remedies at its disposal including, but not limited to the following:

- Disallow credit toward the DBE goal;
- Withholding progress payments;
- Withholding payment to the prime in an amount equal to the unmet portion of the contract goal; and/or
- Termination of the contract.

PROMPT PAYMENT

The prime contractor will be required to pay the DBE within seven (7) working days after he or she has received payment from the Kentucky Transportation Cabinet for work performed or materials furnished.

CONTRACTOR REPORTING

All contractors must keep detailed records and provide reports to the Cabinet on their progress in meeting the DBE requirement on any highway contract. These records may include, but shall not be limited to payroll, lease agreements, cancelled payroll checks, executed subcontracting agreements, etc. Prime contractors will be required to submit certified reports on monies paid to each DBE subcontractor or supplier utilized to meet a DBE goal. These reports must be submitted within 14 days of payment made to the DBE contractor.

Payment information that needs to be reported includes date the payment is sent to the DBE, check number, Contract ID, amount of payment and the check date. Before Final Payment is made on this contract, the Prime Contractor will certify that all payments were made to the DBE subcontractor and/or DBE suppliers.

The Prime Contractor should supply the payment information at the time the DBE is compensated for their work. Form to use is located at:
http://transportation.ky.gov/Construction/Pages/Subcontracts.aspx

The prime contractor should notify the KYTC Office of Civil Rights and Small Business Development seven (7) days prior to DBE contractors commencing work on the project. The contact is Melvin Bynes and the telephone number is (502) 564-3601.

Photocopied payments and completed form to be submitted to: Office of Civil Rights and Small Business Development 6th Floor West 200 Mero Street Frankfort, KY 40622

DEFAULT OR DECERTIFICATION OF THE DBE

If the DBE subcontractor or supplier is decertified or defaults in the performance of its work, and the overall goal cannot be credited for the uncompleted work, the prime contractor may utilize a substitute DBE or elect to fulfill the DBE goal with another DBE on a different work item. If after exerting good faith effort in accordance with the Cabinet's Good Faith Effort policies and procedures, the prime contractor is unable to replace the DBE, then the unmet portion of the goal may be waived at the discretion of the Cabinet.

06/20/2014

EXPEDITE PROJECT WORK ORDER

The Contractor may request that the Department expedite the work order for this project to allow for maximization of time to complete the work. In order for the Department to accomplish this task, the Contractor may be required to "hand carry" all required project documentation to facilitate the process. Immediately UPON NOTIFICATION OF AWARD OF THE CONTRACT, deliver required project documentation to:

Division of Construction Procurement
200 Mero St.
Frankfort, KY 40602

ASPHALT MIXTURE

Unless otherwise noted, the Department estimates the rate of application for all asphalt mixtures to be 110 lbs/sy per inch of depth.

INCIDENTAL SURFACING

The Department has included in the quantities of asphalt mixtures established in the proposal estimated quantities required for resurfacing or surfacing mailbox turnouts, farm field entrances, residential and commercial entrances, curve widening, ramp gores and tapers, and road and street approaches, as applicable. Pave these areas to the limits as shown on Standard Drawing RPM-110-06 or as directed by the Engineer. In the event signal detectors are present in the intersecting streets or roads, pave the crossroads to the right of way limit or back of the signal detector, whichever is the farthest back of the mainline. Surface or resurface these areas as directed by the Engineer. The Department will not measure placing and compacting for separate payment but shall be incidental to the Contract unit price for the asphalt mixtures.

FUEL AND ASPHALT PAY ADJUSTMENT

The Department has included the Contract items Asphalt Adjustment and Fuel Adjustment for possible future payments at an established Contract unit price of $1.00. The Department will calculate actual adjustment quantities after work is completed. If existing Contract amount is insufficient to pay all items on the contract with the adjustments, the Department will establish additional monies with a change order.

Grant County
I75: MP 152.4 to 166.263
Item No. 6-2047

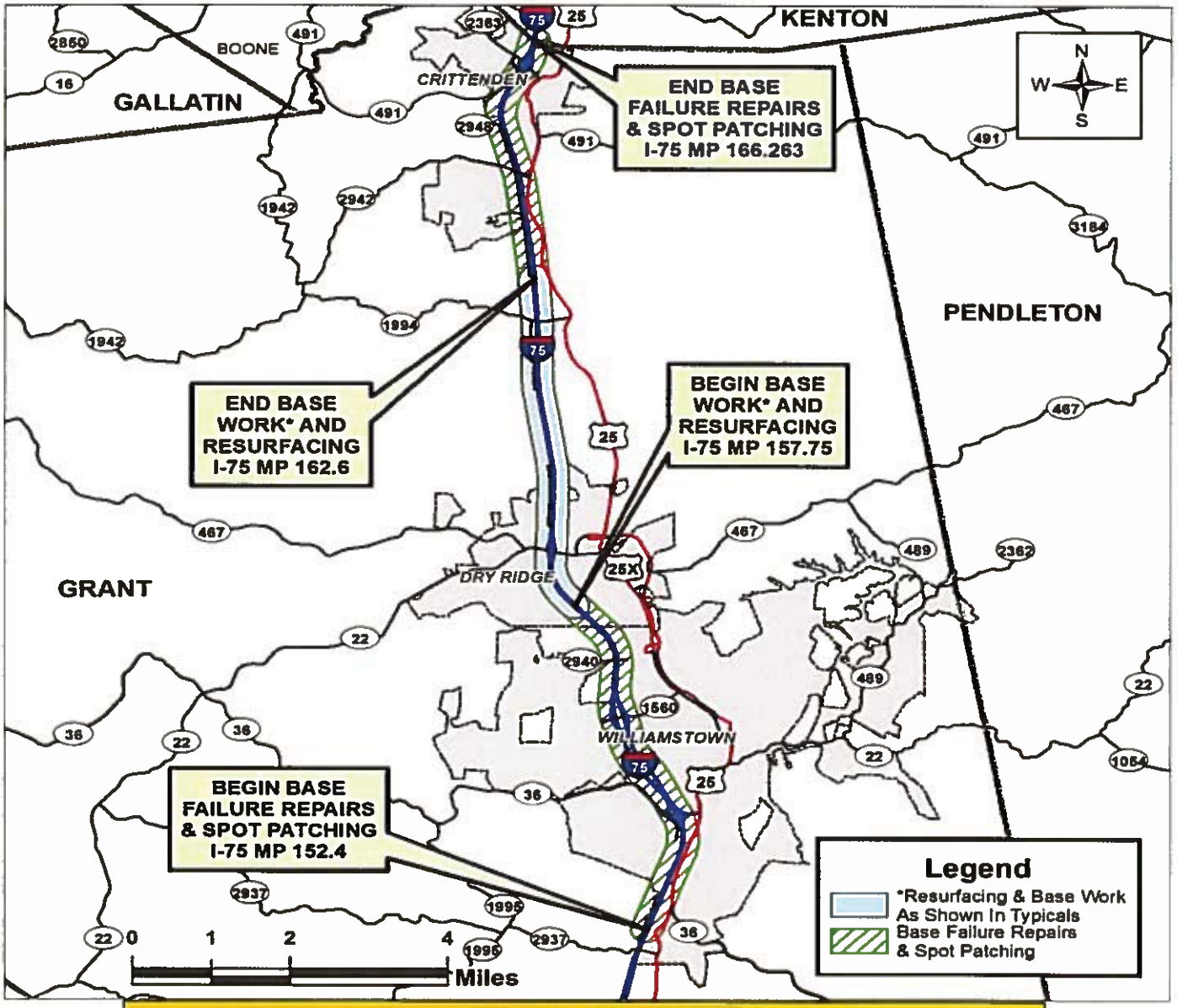

KENTUCKY
DEPARTMENT OF HIGHWAYS
COUNTY OF GRANT

ITEM NO. 6-2047
PROJECT #: FD52 041 0075 152-167 NHPP IM 0757 (140)
LETTING DATE 9/26/2014

RECOMMENDED BY: _____ **DATE:** _____
PROJECT MANAGER

PLAN APPROVED BY: _____ **DATE:** 8/18/14
STATE HIGHWAY ENGINEER

FHWA APPROVED BY: _____ **DATE:** _____

I75 RAMP @ KY 22 (MP 158.544)

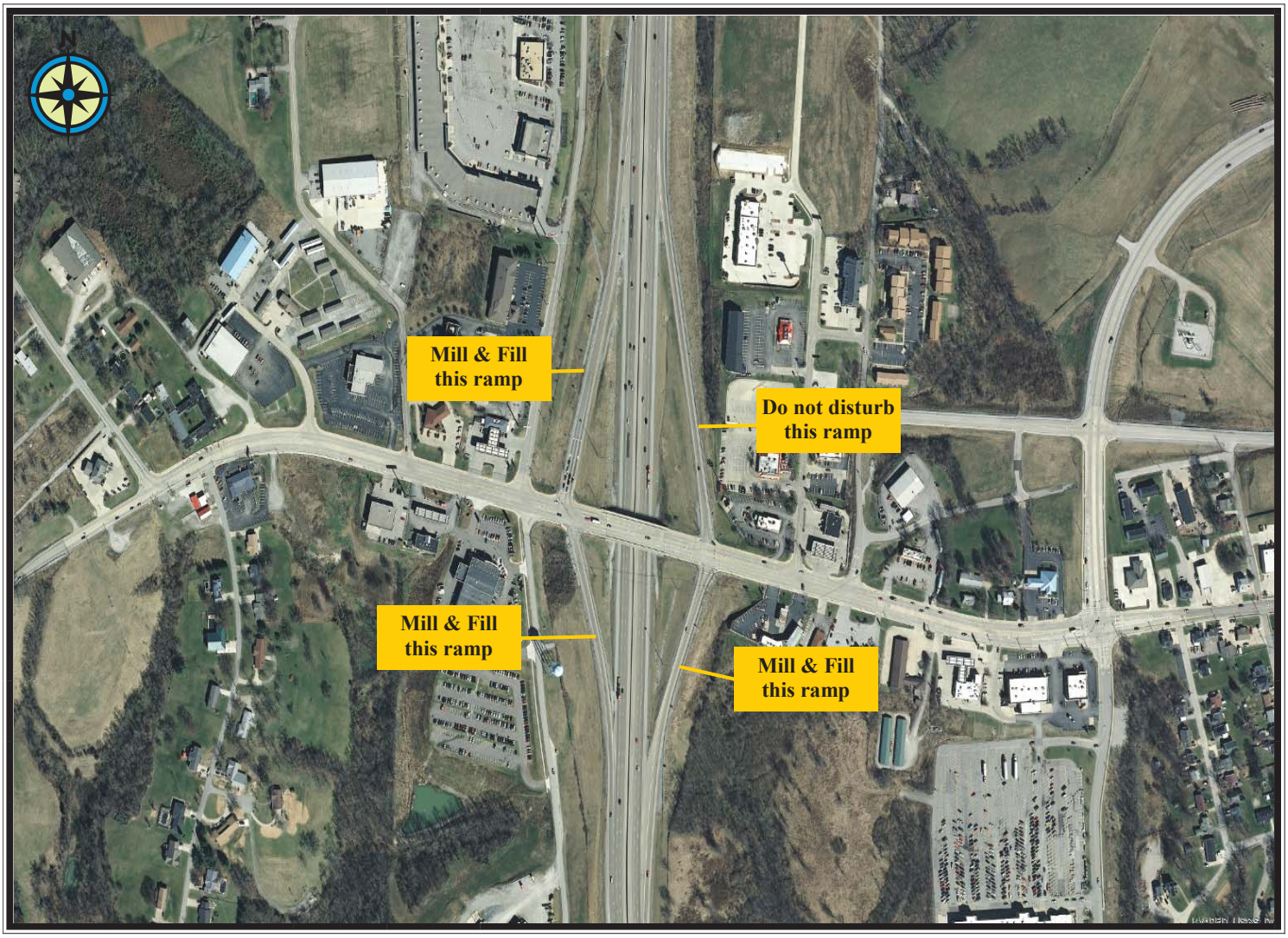

I75 - MP 152.4 - MP 166.263
GRANT COUNTY
ITEM NUMBER: 6-2047
GENERAL SUMMARY

ITEM NUMBER	ITEM 6-2047	QUANTITY	UNIT
	GRANT COUNTY		
190	LEVELING AND WEDGING PG64-22 (1)	1,250	TON
219	CL4 ASPH BASE 1.00D PG76-22 (1)	46,500	TON
342	CL4 ASPH SURF 0.38A PG76-22 (1)	24,600	TON
21001ES400	CL4 ASPH SURF 0.38D PG64-22 (1)	2,000	TON
20071EC	JOINT ADHESIVE	211,548	LIN FT
2696	SHOULDER RUMBLE STRIPS-SAWED	98,125	LIN FT
2014	BARRICADE-TYPE III	4	EACH
2562	TEMPORARY SIGNS	350	SQ FT
2650	MAINTAIN AND CONTROL TRAFFIC	1	LS
2654	TRUCK MOUNTED ATTENUATOR	2	EACH
2671	PORTABLE CHANGEABLE MESSAGE SIGN	4	EACH
2676	MOBILIZATION FOR MILLING &TEXTURING	1	LS
2677	ASPHALT PAVE MILLING & TEXTURING (1) (2)	73,100	TON
2775	ARROW PANEL	4	EACH
4811	ELECTRICAL JUNCTION BOX TYPE B (3)	3	EACH
4793	CONDUIT-1 1/4 IN	330	LIN FT
4820	TRENCHING AND BACKFILLING (3)	500	LIN FT
4830	LOOP WIRE (3)	13,686	LIN FT
4895	LOOP SAW SLOT AND FILL (3)	2,588	LIN FT
4850	CABLE-NO. 14/1 PAIR (3)	855	LIN FT
4795	CONDUIT 2 INCH	240	LIN FT
4829	PIEZOELECTRIC SENSOR	30	EACH
4871	POLE - 35' WOODEN	1	EACH
4899	ELECTRICAL SERVICE	1	EACH
20359NN	GALV STEEL CABINET	6	EACH
20360ES818	WOOD POST	12	EACH
20391NS835	JUNCTION BOX TYPE A	10	EACH
21543EN	BORE AND JACK CONDUIT - 2 INCH	140	LIN FT
23206EC	INSTALL CONTROLLER CABINET	1	EACH
6511	PAVE STRIPING-TEMP PAINT-6 IN	86,000	LIN FT
24189ER	DURABLE WATERBORNE MARKING -6 IN W	96,500	LIN FT
24190ER	DURABLE WATERBORNE MARKING -6 IN Y	57,700	LIN FT
24191ER	DURABLE WATERBORNE MARKING -12 IN W	1,500	LIN FT
6568	PAVE MARKING-THERMO STOP BAR-24IN	82	LIN FT
6565	PAVE MARKING-THERMO X-WALK-6 IN	426	LIN FT
6574	PAVE MARKING-THERMO CURV ARROW	8	EACH
24489EC	INLAID PAVEMENT MARKERS (2)	6,410	EACH
6427	TRENCHING (Pavement)	1,615	LIN FT
6427	TRENCHING (Shoulder)	545	LIN FT
1020	PERF PIPE HEADWALL TY 1-4 IN	16	EACH
2568	MOBILIZATION	1	LS
2569	DEMOBILIZATION	1	LS
10020NS	FUEL ADJUSTMENT	42,183	DOLLAR
10030NS	ASPHALT ADJUSTMENT	105,950	DOLLAR

(1) Extra Quantity Added To be used if needed as directed by the Engineer

(2) Existing pavement marker removal shall be incidental to ASPHALT PAVE MILLING & TEXTURING

(3) Extra Quantity Added (in addition to what is needed for Traffic Counting Loops) for Traffic Signal Loops at the Dry Ridge Northbound Off Ramp.

Note: Quantities from all summaries have been carried over and included in this General Summary.

I75
Item No. 6-2047
Grant County

PAVING SUMMARY

CODE	ITEM	NOTES	UNITS	PROJECT
190	LEVELING AND WEDGING PG64-22 (1)	To be used if needed as directed by the Engineer	TON	1,250
219	CL4 ASPH BASE 1.00D PG76-22 (1)	Base Failure Repairs	TON	46,500
342	CL4 ASPH SURF 0.38A PG76-22 (1)	Mainline and Ramps	TON	24,600
21001ES400	CL4 ASPH SURF 0.38D PG64-22 (1)	Temporary Surface for Base Failures to be done early in Resurfacing Area	TON	2,000
2677	ASPHALT PAVE MILLING & TEXTURING (1) (2)	Mainline and Ramps	TON	73,100
2696	SHOULDER RUMBLE STRIPS-SAWED	Mainline and Ramps	LIN FT	98,125

(1) Extra Quantity Set Up To be used if needed as directed by the Engineer
(2) Existing pavement marker removal shall be incidental to ASPHALT PAVE MILLING & TEXTURING

BASE FAILURE REPAIR SUMMARY (NORTHBOUND)

Beg MP	End MP	Left	Left/ Center	Center	Right/ Center	Right	Length (Ft)	Width (Ft)	Surface Area (SY)	Surface Depth (In)	Surface Qty. (Tons)	Base Area (SY)	Base Depth (In)	Base Qty. (Tons)	Comments
152.39	152.46					X	400	12	533	1.50	44	533	3.0	88	Needs Surface & Base
153.36	153.41			X			320	12	427	1.50	35	87	3.0	14	Surface & Some Base
153.55						X	25	9	25	1.50	2	25	4.5	6	Needs Surface & Base
153.86	153.93					X	350	12	467	1.50	39	467	4.5	116	Needs Surface & Base
154.07	154.11					X	220	9	220	1.50	18	220	4.5	54	Needs Surface & Base
154.15						X	100	9	100	1.50	8	100	4.5	25	Needs Surface & Base
154.95	155.04					X	450	12	600	1.50	50	107	4.5	26	Surface + Some Base with Loops
155.00			X				25	9	25	1.50	2	25	4.5	6	Needs Surface & Base
155.47						X	25	9	25	1.50	2	25	4.5	6	Needs Surface & Base
155.83	155.91					X	420	12	560	1.50	46	560	4.5	139	Needs Surface & Base
156.27	156.31			X			225	12	300	1.50	25	300	4.5	74	Needs Surface & Base
156.49						X	50	12	67	1.50	6	67	4.5	17	Needs Surface & Base
156.80	156.97					X	898	12	1,197	1.50	99	1,197	4.5	296	Needs Surface & Base
157.12	157.24					X	635	12	847	1.50	70	847	4.5	210	Needs Surface & Base
157.55						X	25	9	25	1.50	2	25	4.5	6	Needs Surface & Base
157.67	157.75			X		X	422	24	1,126	1.50	93	1,126	4.5	279	Needs Surface & Base
163.86	163.88					X	106	12	141	1.60	12	141	4.5	35	Needs Surface & Base
164.06	164.08					X	106	12	141	1.60	12	141	4.5	35	Needs Surface & Base
164.17	164.20				X	X	158	12	211	1.60	19	211	4.5	52	Needs Surface & Base
164.49	164.54					X	264	12	352	1.60	31	352	4.5	87	Needs Surface & Base
164.62	164.69					X	370	12	493	1.60	43	33	4.5	8	Needs Surface & Base
164.74	164.78					X	211	12	282	1.60	25	282	4.5	70	Needs Surface & Base
166.26	166.28			X			106	12	141	1.50	12	141	7.0	54	Needs Surface & Base
										Total Tonnage:	694			1,703	

BASE FAILURE REPAIR SUMMARY (SOUTHBOUND)

Beg MP	End MP	Left	Left/ Center	Center	Right/ Center	Right	Length (Ft)	Width (Ft)	Surface Area (SY)	Surface Depth (In)	Surface Qty. (Tons)	Base Area (SY)	Base Depth (In)	Base Qty. (Tons)	Comments
164.71	164.69			X			106	12	141	1.60	12	141	4.5	35	Needs Surface & Base
163.99						X	40	12	53	1.60	5	53	4.5	13	Needs Surface & Base
163.94	163.87					X	370	12	493	1.60	43	493	4.5	122	Needs Surface & Base
163.16						X	25	12	33	1.60	3	33	4.5	8	Needs Surface & Base
162.69						X	25	12	33	1.60	3	33	4.5	8	Needs Surface & Base
162.59	162.58					X	53	12	70	1.60	6	70	6.0	23	Needs Surface & Base
SB ON RMP							50	12		Full 1.5" Overlay		67	6.0	22	Base Repair
157.57						X	50	12	67	1.50	6	67	4.5	17	Needs Surface & Base
157.25						X	60	12	80	1.50	7	80	4.5	20	Needs Surface & Base
156.82	156.77					X	264	12	352	1.50	29	352	4.5	87	Needs Surface & Base
156.65						X	50	12	67	1.50	6	67	4.5	17	Needs Surface & Base
156.36	156.2					X	845	9	845	1.50	70	845	4.5	209	Needs Surface & Base
155.96						X	50	9	50	1.50	4	50	4.5	12	Needs Surface & Base
155.9						X	50	9	50	1.50	4	50	4.5	12	Needs Surface & Base
155.83	155.77					X	317	12	422	1.50	35	422	4.5	105	Needs Surface & Base
155.68	155.64					X	211	9	211	1.50	17	211	4.5	52	Needs Surface & Base
155.62	155.58					X	211	12	282	1.50	23	282	4.5	70	Needs Surface & Base
155.58	155.39					X	1,003	9	1,003	1.50	83	1,003	4.5	248	Needs Surface & Base
155.30	155.25					X	264	9	264	1.50	22	264	4.5	65	Needs Surface & Base
155.12	155.11					X	53	9	53	1.50	4	53	4.5	13	Needs Surface & Base
155.11	155.09					X	106	9	106	1.50	9	106	4.5	26	Needs Surface & Base
155.00	154.98					X	106	9	106	1.50	9	106	4.5	26	Needs Surface & Base
154.98	154.76					X	1,162	9	1,162	1.50	96	1,162	4.5	287	Needs Surface & Base
154.76	154.74					X	106	9	106	1.50	9	106	4.5	26	Needs Surface & Base
154.63						X	50	9	50	1.50	4	50	4.5	12	Needs Surface & Base
154.56	154.53					X	158	9	158	1.50	13	158	4.5	39	Needs Surface & Base
154.35	154.31			X		X	211	24	563	1.50	46	133	4.5	33	Needs Surface & Base
154.31	154.15					X	845	9	845	1.50	70	845	4.5	209	Needs Surface & Base
154.15	154.13		X			X	106	18	211	1.50	17	211	4.5	52	Needs Surface & Base
154.10	154.04					X	317	9	317	1.50	26	317	4.5	78	Needs Surface & Base
154.04	154.02					X	106	12	141	1.50	12	141	4.5	35	Needs Surface & Base
154.02	154					X	106	9	106	1.50	9	106	4.5	26	Needs Surface & Base
154.00	153.96					X	211	9	211	1.50	17	211	4.5	52	Needs Surface & Base
153.91	153.88					X	158	9	158	1.50	13	158	4.5	39	Needs Surface & Base
153.82	153.76					X	317	9	317	1.50	26	317	4.5	78	Needs Surface & Base
153.66	153.58					X	422	9	422	1.50	35	422	4.5	105	Needs Surface & Base
152.52	152.49				X		158	12	211	1.50	17	211	3.0	35	Needs Surface & Base
152.49	152.46				X		158	12	211	1.50	17	211	3.0	35	Needs Surface & Base
152.43	152.38						264	9	264	1.50	22	40	3.0	7	Surface & Some Base
										Total Tonnage:	849			2,361	

NORTHBOUND BASE FAILURES TO BE COMPLETED BY NOVEMBER 30, 2014

Northbound I-75 Repair (Partial Completion Portion of Contract)							Partial Completion - Grant County					I-75 Station Summary		
						Length	Width	Surface Area	Surface Depth	Surface Qty.	Base Area	Base Depth	Base Qty.	
Milepoint	Left	Left/Center	Center	Right/Center	Right	(Ft)	(Ft)	(SY)	(In)	(Tons)	(SY)	(In)	(Tons)	Comments
152.39														
					X	400	12	533	1.50	44	533	3.0	88	Permanent Surface 76-22
152.46														
153.36														
			X			320	12	427	1.50	35	87	3.0	14	Permanent Surface 76-22
153.41														
153.55					X	25	9	25	1.50	2	25	4.5	6	Permanent Surface 76-22
153.86														
					X	350	12	467	1.50	39	467	4.5	116	Permanent Surface 76-22
153.93														
154.07														
					X	220	9	220	1.50	18	220	4.5	54	Permanent Surface 76-22
154.11														
154.15					X	100	9	100	1.50	8	100	4.5	25	Permanent Surface 76-22
154.95														
					X	450	12	600	1.50	50	107	4.5	26	Permanent Surface 76-22
155.04														
155.00		X				25	9	25	1.50	2	25	4.5	6	Permanent Surface 76-22
155.47					X	25	9	25	1.50	2	25	4.5	6	Permanent Surface 76-22
155.83														
					X	420	12	560	1.50	46	560	4.5	139	Permanent Surface 76-22
155.91														
156.27														
			X			225	12	300	1.50	25	300	4.5	74	Permanent Surface 76-22
156.31														
157.12														
					X	635	12	847	1.50	70	847	4.5	210	Permanent Surface 76-22
157.24														

NORTHBOUND BASE FAILURES TO BE COMPLETED BY NOVEMBER 30, 2014

158.18														
					X	211	12	282	1.50	23	282	5.0	77	Temporary Surface 64-22
158.22														
158.41														
					X	317	12	422	1.50	35	422	5.0	116	Temporary Surface 64-22
158.47														
158.50					X	25	12	33	1.50	3	33	5.0	9	Temporary Surface 64-22
158.72														
					X	211	12	282	1.50	23	282	5.0	77	Temporary Surface 64-22
158.76														
158.77														
			X			211	12	282	1.50	23	282	5.0	77	Temporary Surface 64-22
158.81														
159.14														
			X			211	12	282	1.50	23	282	5.0	77	Temporary Surface 64-22
159.18														
159.35														
		X				158	12	211	1.50	17	211	5.0	58	Temporary Surface 64-22
159.38														
159.43														
				X		845	12	1,126	1.50	93	1,126	5.0	310	Temporary Surface 64-22
159.59														
159.59														
			X		X	106	24	282	1.50	23	282	5.0	77	Temporary Surface 64-22
159.61														
159.61														
				X		370	12	493	1.50	41	493	5.0	136	Temporary Surface 64-22
159.68														
159.68														
					X	158	12	211	1.50	17	211	5.0	58	Temporary Surface 64-22
159.71														
159.73														
			X		X	317	14	493	1.50	41	493	5.0	136	Temporary Surface 64-22
159.79														

NORTHBOUND BASE FAILURES TO BE COMPLETED BY NOVEMBER 30, 2014

159.88														
				X		106	12	141	1.50	12	141	5.0	39	Temporary Surface 64-22
159.90														
160.14														
					X	528	12	704	1.50	58	704	5.0	194	Temporary Surface 64-22
160.24														
160.35														
					X	317	12	422	1.50	35	422	5.0	116	Temporary Surface 64-22
160.41														
160.64														
					X	53	12	70	1.50	6	70	5.0	19	Temporary Surface 64-22
160.65														
160.80														
					X	475	14	739	1.50	61	739	5.0	203	Temporary Surface 64-22
160.89														
166.26														
			X			106	12	141	1.50	12	141	7.0	54	Permanent Surface 76-22
166.28														
Note:							**CL4 ASPH SURF 0.38A PG76-22 Tons (Permanent):**			**352**				
This table indicates those areas of interstate that are to be repaired							**CL4 ASPH SURF 0.38D PG64-22 Tons (Temporary):**			**534**				
by the partial completion date established within the contract. If											**CL4 ASPH BASE 1.00D PG76-22 Tons:**		**2,599**	
the contractor should choose to permanently repair the areas														
designated with temporary surface as part of a larger scale effort,									**Total Tonnage**					
the surface course shall conist of CL4 ASPH SURF 0.38A PG76-22.									**Partial Comp.**					
									(NB & SB):	**7,530**				

SOUTHBOUND BASE FAILURES TO BE COMPLETED BY NOVEMBER 30, 2014

Southbound I-75 Repair (Partial Completion Portion of Contract)									I-75 Station Summary			Partial Completion - Grant County		
						Length	Width	Surface Area	Surface Depth	Surface Qty.	Base Area	Base Depth	Base Qty.	
Milepoint	Left	Left/Center	Center	Right/Center	Right	(Ft)	(Ft)	(SY)	(In)	(Tons)	(SY)	(In)	(Tons)	Comments
164.71														
			X			106	12	141	1.60	12	141	4.5	35	Permanent Surface 76-22
164.69														
162.38			X			25	12	33	1.50	3	33	5.0	9	Temporary Surface 64-22
162.38														
					X	317	12	422	1.50	35	422	5.0	116	Temporary Surface 64-22
162.32														
162.32														
			X		X	158	24	422	1.50	35	422	5.0	116	Temporary Surface 64-22
162.29														
161.93			X		X	25	24	67	1.50	6	67	5.0	18	Temporary Surface 64-22
160.89														
			X		X	53	24	141	1.50	12	141	5.0	39	Temporary Surface 64-22
160.88														
160.88														
			X			634	16	1,126	1.50	93	1,126	5.0	310	Temporary Surface 64-22
160.76														
160.73														
		X				370	12	493	1.50	41	493	5.0	136	Temporary Surface 64-22
160.66														
160.50														
			X			158	12	211	1.50	17	211	5.0	58	Temporary Surface 64-22
160.47														
160.47					X	25	12	33	1.50	3	33	5.0	9	Temporary Surface 64-22
160.23														
			X			211	12	282	1.50	23	282	5.0	77	Temporary Surface 64-22
160.19														
159.93														
					X	158	12	211	1.50	17	211	5.0	58	Temporary Surface 64-22
159.90														

SOUTHBOUND BASE FAILURES TO BE COMPLETED BY NOVEMBER 30, 2014

159.80			X			60	12	80	1.50	7	80	5.0	22	Temporary Surface 64-22
158.72														
				X		158	12	211	1.50	17	211	5.0	58	Temporary Surface 64-22
158.69														
SB ON RMP						50	12	67	1.50	6	67	5.0	18	Temporary Surface 64-22
158.32														
			X			317	16	563	1.50	46	563	5.0	155	Temporary Surface 64-22
158.26														
158.25														
			X			158	16	282	1.50	23	282	5.0	77	Temporary Surface 64-22
158.22														
158.19			X			50	12	67	1.50	6	67	5.0	18	Temporary Surface 64-22
158.14														
				X		158	12	211	1.50	17	211	5.0	58	Temporary Surface 64-22
158.11														
158.07				X		30	12	40	1.50	3	40	5.0	11	Temporary Surface 64-22
158.05														
				X		211	12	282	1.50	23	282	5.0	77	Temporary Surface 64-22
158.01														
155.68														
					X	211	9	211	1.50	17	211	4.5	52	Permanent Surface 76-22
155.64														
155.58														
					X	1,003	9	1,003	1.50	83	1,003	4.5	248	Permanent Surface 76-22
155.39														
155.30														
					X	264	9	264	1.50	22	264	4.5	65	Permanent Surface 76-22
155.25														
155.00														
					X	106	9	106	1.50	9	106	4.5	26	Permanent Surface 76-22
154.98														

SOUTHBOUND BASE FAILURES TO BE COMPLETED BY NOVEMBER 30, 2014

154.98														
					X	1,162	9	1,162	1.50	96	1,162	4.5	287	Permanent Surface 76-22
154.76														
154.76														
					X	106	9	106	1.50	9	106	4.5	26	Permanent Surface 76-22
154.74														
154.63					X	50	9	50	1.50	4	50	4.5	12	Permanent Surface 76-22
154.56														
					X	158	9	158	1.50	13	158	4.5	39	Permanent Surface 76-22
154.53														
154.35														
			X		X	211	24	563	1.50	46	133	4.5	33	Permanent Surface 76-22
154.31														
154.31														
					X	845	9	845	1.50	70	845	4.5	209	Permanent Surface 76-22
154.15														
154.15														
		X			X	106	18	211	1.50	17	211	4.5	52	Permanent Surface 76-22
154.13														
154.10														
					X	317	9	317	1.50	26	317	4.5	78	Permanent Surface 76-22
154.04														
154.04														
					X	106	12	141	1.50	12	141	4.5	35	Permanent Surface 76-22
154.02														
154.02														
					X	106	9	106	1.50	9	106	4.5	26	Permanent Surface 76-22
154.00														
154.00														
					X	211	9	211	1.50	17	211	4.5	52	Permanent Surface 76-22
153.96														
153.91														
					X	158	9	158	1.50	13	158	4.5	39	Permanent Surface 76-22
153.88														

SOUTHBOUND BASE FAILURES TO BE COMPLETED BY NOVEMBER 30, 2014

153.82														
					X	317	9	317	1.50	26	317	4.5	78	Permanent Surface 76-22
153.76														
153.66														
					X	422	9	422	1.50	35	422	4.5	105	Permanent Surface 76-22
153.58														
152.52														
				X		158	12	211	1.50	17	211	3.0	35	Permanent Surface 76-22
152.49														
152.49														
				X		158	12	211	1.50	17	211	3.0	35	Permanent Surface 76-22
152.46														
152.43														
						264	9	264	1.50	22	40	3.0	7	Permanent Surface 76-22
152.38														
Note:														
This table indicates those areas of interstate that are to be repaired									**CL4 ASPH SURF 0.38A PG76-22 Tons (Permanent):**	**593**				
by the partial completion date established within the contract. If									**CL4 ASPH SURF 0.38D PG64-22 Tons (Temporary):**	**433**				
the contractor should choose to permanently repair the areas											**CL4 ASPH BASE 1.00D PG76-22 Tons:**		**3,019**	
designated with temporary surface as part of a larger scale effort,														
the surface course shall conist of CL4 ASPH SURF 0.38A PG76-22.									**Total Tonnage**					
									Partial Comp.					
									(NB & SB):	**7,530**				

Transverse Trenching (w/4" underdrain)

Location/Item	HW Quantity	Pvmt. Length	Typ. Trench Length	Average Depth Left of Center Ln.	Avg. Depth at Long. Drain or outside shldr.
Northbound					
157.829		25		12"	16"
157.879		25		12"	16"
157.931		25		12"	16"
157.982		25		12"	16"
158.000		25		12"	16"
158.045		25		12"	16"
158.173		25		12"	16"
158.234		25		12"	16"
158.458		25		12"	16"
158.508		25		12"	16"
158.600		25		12"	16"
159.000		25		12"	16"
159.107		25		12"	16"
159.188		25		12"	16"
159.408		25		12"	16"
159.518	1	35	40	12"	42"
159.603	1	35	40	12"	42"
159.698	1	35	30	12"	42"
159.742	1	35	30	12"	42"
159.820	1	35	30	12"	42"
159.975		25		12"	16"
160.038		25		12"	16"
160.100		25		12"	16"
160.200		25		12"	16"
160.859		25		12"	16"
160.994		25		12"	16"
Southbound					
162.350		25		12"	16"
162.280		25		12"	16"
162.097		25		12"	16"
161.909		25		12"	16"
161.551		25		12"	16"
161.132		25		12"	16"
161.063		25		12"	16"
160.981	1	35	30	12"	42"
160.900	1	35	30	12"	42"
160.842		25		12"	16"
160.795		25		12"	16"
160.128	Ex. HW	35	30	12"	42"
159.933		25		12"	16"

Location/Item	HW Quantity	Pvmt. Length	Typ. Trench Length	Average Depth Left of Center Ln.	Avg. Depth at Long. Drain or outside shldr.
Southbound (Cont.)					
159.886		25		12"	16"
159.851		25		12"	16"
159.547		25		12"	16"
159.484		25		12"	16"
158.685		50		12"	20"
158.637		25		12"	16"
158.600		25		12"	16"
158.529		25		12"	16"
158.265	1	45	30	12"	60"
158.203	1	35	40	12"	60"
158.150	1	45	30	12"	60"
158.105	1	35	35	12"	60"
158.047	1	35	30	12"	60"
158.001	1	35	30	12"	60"
157.885	1	35	30	12"	60"
157.865	1	35	30	12"	60"
157.753	1	35	30	12"	42"
Totals:	16	1615	545		

1) All underdrain material, granular backfill material, flowable fill, fabric (as applicable), dressing, seeding and mulching, etc. shall be incidental to the unit bid price for trenching.

2) New underdrain shall be 4” perforated sock-pipe.

3) Granular Backfill shall consist of #9 aggregate filled to the water layer in the existing pavement structure. The water layer is approximately 5” below the existing finished asphalt surface. Field conditions may slightly vary.

4) Flowable fill shall be placed at the bottom elevation of the newly placed asphalt surface.

5) Areas outside of the full-width resurfacing portion of this project, that involve transverse trenching shall be milled 25’ in width and replaced with new asphalt surface. Milling and surfacing quantities have already been established in the estimate.

6) Trenched locations must set for at least 30 calendar days before permanent surface can be placed over it.

COUNTY OF	ITEM NO.
Grant	6-2047

I75
TYPICAL SECTIONS
(MP 157.75-162.6)

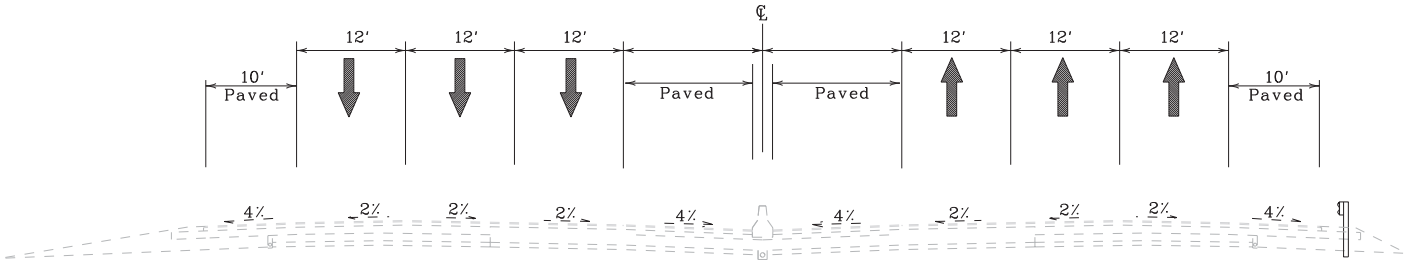

SOUTHBOUND NORTHBOUND

EXISTING

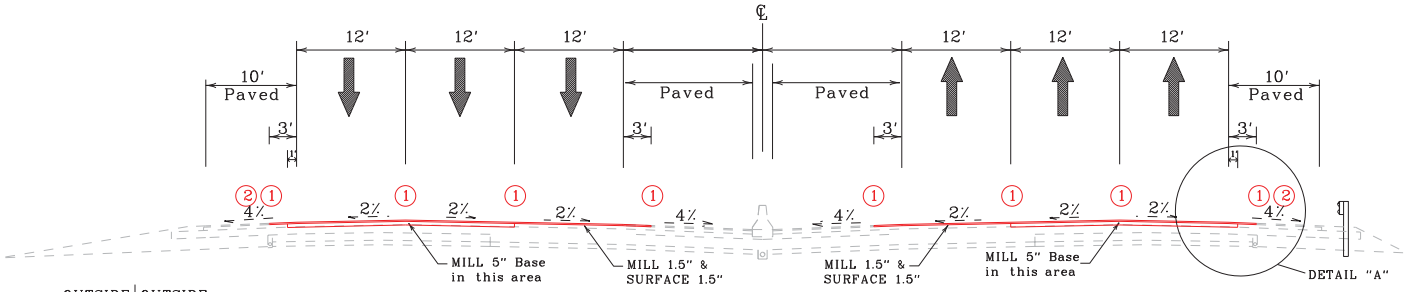

SOUTHBOUND PROPOSED NORTHBOUND

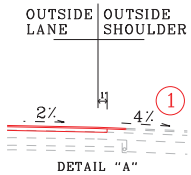

DETAIL "A"

*NOTE: BASE LIFT EXTENDS 1' INTO OUTSIDE SHOULDER AS SHOWN.

1 Place Joint Adhesive between driving lanes and where new surface extends into shoulders.

SURFACING SCHEDULE

MAINLINE TRAFFIC LANES and 3' of SHOULDERS

ASPH. PAVE MILLING & TEXTURING ..... 1.5" DEPTH
CLASS 4 ASPH. SURF. 0.38A PG76-22 ..... 1.5" DEPTH

2 Resurfacing will extend wider in the outside shoulder by around 3' from MP 160.89-162.6 to account for the existing most recent resurfacing. Quantities have been set up to account for this and shall be paved as directed by the Engineer.

OUTSIDE and MIDDLE MAINLINE TRAFFIC LANE and 1' into OUTSIDE SHOULDER

ASPH. PAVE MILLING & TEXTURING ..... 6.5" DEPTH
CLASS 4 ASPH. BASE 1.00D PG76-22 ..... 5" DEPTH
CLASS 4 ASPH. SURF. 0.38A PG76-22 ..... 1.5" DEPTH

*NOTE: THERE ARE BASE FAILURES SETUP OUTSIDE THE RESURFACING AREA (MP 157.75-162.6). PLEASE SEE BASE FAILURE SUMMARY TABLE AND DETAIL.

NOT TO SCALE

I75
TYPICAL SECTIONS

COUNTY OF	ITEM NO.
Grant	6-2047

TYPICAL SECTIONS
RAMPS

KY 22 (MP 158.544)
(Excluding Ramp D)

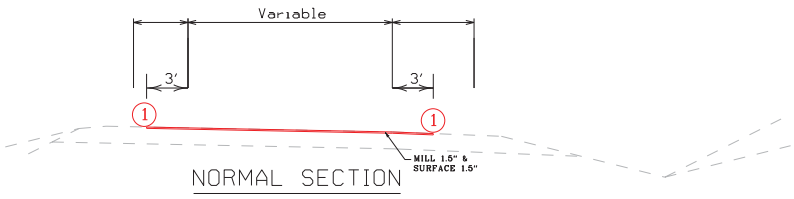

NORMAL SECTION

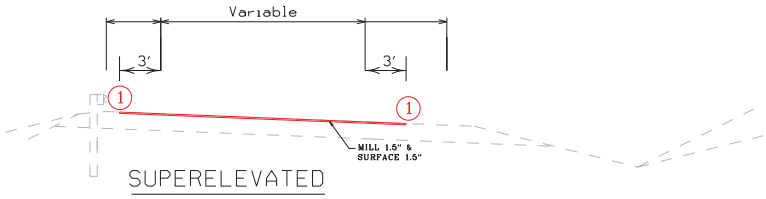

SUPERELEVATED

PAVEMENT REHABILITATION

DRIVING LANES and 3' of SHOULDERS ONLY

ASPH. PAVE MILLING & TEXTURING ..... 1.5" DEPTH
CLASS 4 ASPH. SURF. 0.38A PG76-22 ..... 1.5" DEPTH

NOTE: RAMPS A, B, and C at the KY 22 INTERCHANGE (MP 158.544) SHALL BE MILLED AND SURFACED TO THE EXISTING EDGE OF PAVEMENT OF THEIR RESPECTIVE CROSS ROAD.

*NOTE: DO NOT DISTURB ANY RAMP EXCEPT RAMPS A, B, and C at the KY 22 INTERCHANGE (MP 158.544)

1 Place Joint Adhesive where new surface extends into shoulders.

NOT TO SCALE

I75
RAMP
TYPICAL SECTIONS

COUNTY OF	ITEM NO.
Grant	6-2047

BASE FAILURE REPAIR

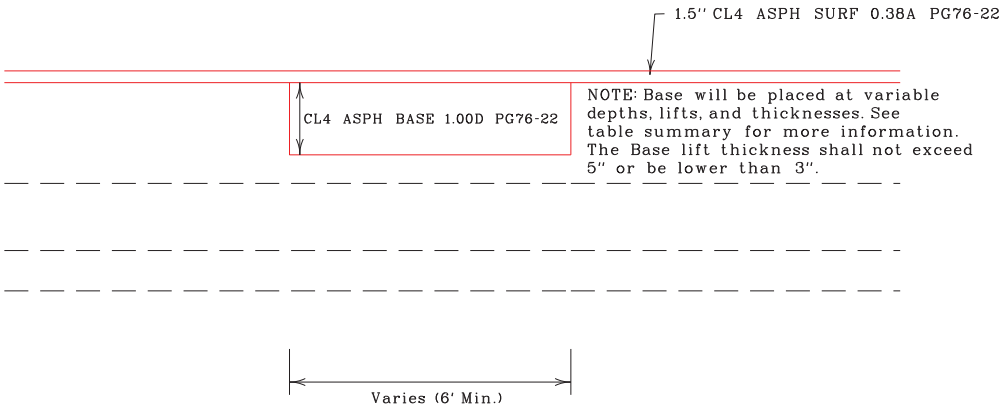

NOTE: Base will be placed at variable depths, lifts, and thicknesses. See table summary for more information. The Base lift thickness shall not exceed 5" or be lower than 3".

1 Proposed Base Failure Repair areas are shown in the table summary. The location and length of each repair area shall be at the discretion of the Engineer. The asphalt base shall be paid by the ton as "CL 4 ASPHALT BASE 1.00D PG76-22" and the additional milling shall be paid by the ton as "ASPHALT PAVE MILLING & TEXTURING".

NOT TO SCALE

175
BASE FAILURE REPAIR

COUNTY OF	ITEM NO.
Grant	6-2047

TRENCHING

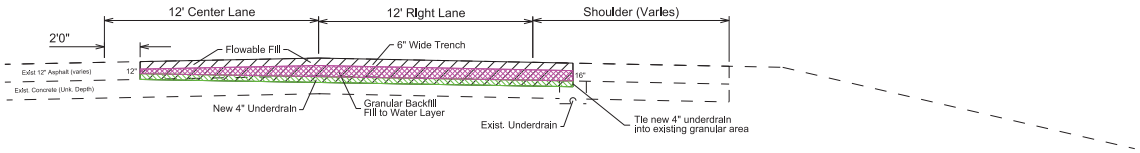

Normal Crown (Typ.)

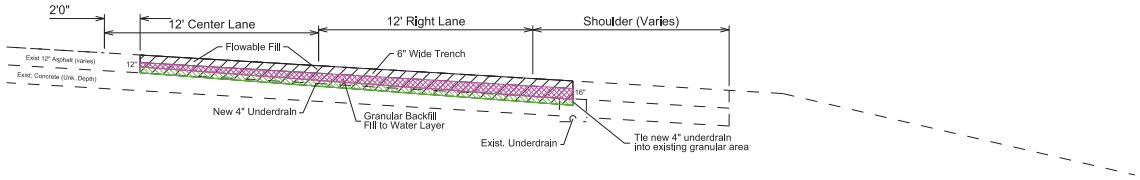

Superelevation - Left (Typ.)

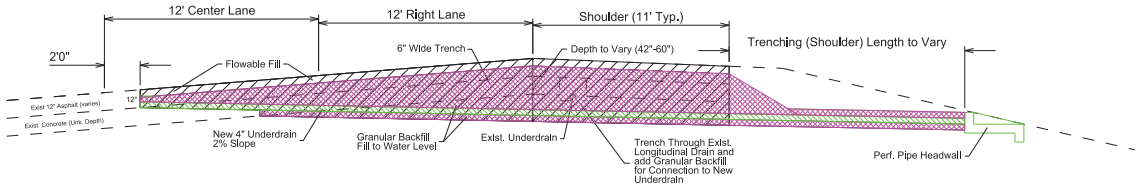

Superelevation - Right (Typ.)

1) All underdrain material, granular backfill material, flowable fill, fabric (as applicable), dressing, seeding and mulching, etc. shall be incidental to the unit bid price for trenching.

2) New underdrain shall be 4" perforated sock-pipe.

3) Granular Backfill shall consist of #9 aggregate filled to the water layer in the existing pavement structure. The water layer is approximately 5" below the existing finished asphalt surface. Field conditions may slightly vary.

4) Flowable fill shall be placed at the bottom elevation of the newly placed asphalt surface.

5) Areas outside of the full-width resurfacing portion of this project, that involve transverse trenching shall be milled 25' in width and replaced with new asphalt surface. Milling and surfacing quantities have already been established in the estimate.

NOT TO SCALE

175
Trenching

I75 GRANT COUNTY
MP 152.4 TO MP 166.263
FD52 041 0075 152-167
ITEM NO. 6-2047

THIS PROJECT IS A FULLY CONTROLLED ACCESS HIGHWAY

I. DESCRIPTION

Perform all work in accordance with the Department's 2012 Standard Specifications, Supplemental Specifications, any applicable Special Provisions, and applicable Standard and Sepia Drawings, except as hereafter specified. Article references are to the Standard Specifications. Furnish all materials, labor, equipment, and incidentals for the following work:

(1) Maintain and Control Traffic; (2) Inlaid pavement markers; (3) Asphalt Pavement Milling and Texturing; (4) Asphalt Base and Surface at locations listed and/or directed by the Engineer; and (5) All other work specified as part of this contract.

II. MATERIALS

Except as specified in these notes or on the drawings, all materials will be according to the Standard Specifications and applicable Special Provisions and Special Notes. The Department will sample and test all materials according to the Department's Sampling Manual and the Contractor will have the materials available for sampling a sufficient time in advance of the use of the materials to allow for the necessary time for testing, unless otherwise specified in these notes.

A. Maintain and Control Traffic. See Traffic Control Plan.

B. Pavement Markings -6 inch Paint. Use Durable Waterborne Marking 6- inch for permanent striping (12 inch at entrance and exit ramp tapers).

III. CONSTRUCTION METHODS

A. Maintain and Control Traffic. See Traffic Control Plan.

B. Site Preparation. Be responsible for all site preparation. Do not disturb existing signs. This item will include, but is not limited to, incidental excavation and backfilling; removal of all obstructions or any other items; disposal of materials; sweeping and removal of debris; shoulder preparation and

restoration, temporary and permanent erosion and pollution control; and all incidentals. Site preparation will be only as approved or directed by the Engineer. Other than the bid items listed, no direct payment will be made for site preparation, but will be incidental to the other items of work.

C. Disposal of Waste. Dispose of all cuttings, debris, and other waste off the right-of-way at approved sites obtained by the Contractor at no additional cost to the Department. The contractor will be responsible for obtaining any necessary permits for this work. Temporary openings in the right of way fence for direct access to waste sites off the right of way or for access to other public roads will not be allowed. No separate payment will be made for the disposal of waste and debris from the project or obtaining the necessary permits, but will be incidental to the other items of the work.

D. Final Dressing, Clean Up, and Seeding and Protection. After all work is completed, completely remove all debris from the job site. Perform Class A Final Dressing on all disturbed areas. Sow disturbed earthen areas with Seed Mixture No. I. These items are incidental to the other items of the work.

E. Pavement Striping and Pavement Markers. Permanent striping will be in accordance with Section 112, except that:

(1) Striping will be 6” in width, except 12” in gore area;
(2) Permanent Striping will be in place before job is complete;
(3) Permanent striping will be 6” Durable Waterborne Marking &
(4) Existing pavement marker removal shall be incidental to ASPHALT PAVE MILLING & TEXTURING.

F. On-Site Inspection. Each Contractor submitting a bid for this work will make a thorough inspection of the site prior to submitting a bid and will thoroughly familiarize himself with existing conditions so that the work can be expeditiously performed after a contract is awarded. Submission of a bid will be considered evidence of this inspection having been made. Any claims resulting from site conditions will not be honored by the Department.

G. Property Damage. The Contractor shall be responsible for all damage to public and/or private property resulting from the Contractor’s work. Restore all disturbed features in like kind materials and design to the existing or proposed grades, as applicable, at no additional cost to the Department.

H. Caution. Information shown on the drawings and in this proposal and the types and quantities of work listed are not to be taken as an accurate or complete evaluation of the material and conditions to be encountered during construction. The bidder must draw his own conclusions as to the conditions encountered. The Department does not give any guarantee as to the

accuracy of the data and no claim will be considered for additional compensation if the conditions encountered are not in accordance with the information shown.

I. **Utility Clearance.** It is not anticipated that utility facilities will need to be relocated and/or adjusted; however, in the event that it is discovered that the work does require that utilities be relocated and/or adjusted, the utility companies will work concurrently with the Contractor while relocating their facilities.

IV. METHOD OF MEASUREMENT

Except as specified in these notes, or elsewhere in the drawings or this proposal, the method of measurement will be in accordance with the Standard Specifications.

A. Maintain and Control Traffic. See Traffic Control Plan.

B. Site Preparation. Other than the bid items listed, site preparation will not be measured for payment but will be incidental to the other items of work.

C. Inlaid Pavement Markers and Permanent Striping. Permanent striping Durable Waterborne Marking (6” and 12”) is measured per linear foot. See Traffic Control Plan. Inlaid Pavement Markers are measured as each. No direct payment will be made for the removal of the existing pavement markers prior to the milling operation and shall be considered incidental to milling and texturing.

E. Base Failure Repair. Additional quantities have been set up for Base failure repairs.

V. BASIS OF PAYMENT

Except as specified in these notes, or elsewhere in the drawings or this proposal, basis of payment will be in accordance with the Standard Specifications. No direct payment will be made other than for the bid items listed. All other items required to complete the construction will be incidental to the bid items listed. Existing signs damaged by the Contractor will be replaced by the Contractor at his expense.

A. Maintain and Control Traffic. See Traffic Control Plan.

B. Site Preparation. Other than the bid items listed, site preparation will not be measured for payment but will be incidental to the other items of work.

C. Inlaid Pavement Markers and Permanent Striping. See Traffic Control Plan.

NOTES APPLICABLE TO PROJECT
PAVEMENT REHABILITATION
GRANT COUNTY
ITEM NO. 6-2047

THIS PROJECT IS A FULLY CONTROLLED ACCESS HIGHWAY

1. The dimensions and cross slopes shown on the typical section for pavement and shoulder widths and thickness are nominal or typical dimensions. The actual dimensions to be constructed may be varied to fit existing conditions as directed or approved by the Engineer. It is not intended that existing pavement or shoulders be widened or the cross slopes changed unless specified in the Proposal or directed by the Engineer.

2. Contractor shall mill mainline pavements on the driving lanes and 3' of shoulders as shown on the Typical Sections from milepoint 157.75 to milepoint 162.6. Payment for milling shall be per ton and paid as "ASPH PAVE MILLING & TEXTURING". 1.5" Asphalt Surface shall be placed on the mainline and 3' of shoulders and 5" Asphalt Base shall be placed on the middle and outside lanes and 1' into outside shoulder as shown on the Typical Sections from milepoint 157.75 to milepoint 162.6. Payment for asphalt shall be per ton and paid as "CL4 ASPH SURF 0.38A PG76-22" and "CL4 ASPH BASE 1.00D PG76-22". Resurfacing will extend wider in the outside shoulder by around 3' from milepoint 160.89 to 162.6 to account for the existing most recent resurfacing.

3. The KY 22 ramps at milepoint 158.544 shall be milled 1.5 inches and paved with 1.5 inches of asphalt surface on the driving lanes and 3' of shoulders as shown in the Typical Sections. Do not disturb ramp D, it has been paved recently.

4. Base failure repairs will be placed as shown in the summary and details at locations directed by The Engineer and paid for per ton with "ASPH PAVE MILLING & TEXTURING" and of "CL4 ASPH BASE 1.00D PG76-22". Base lift thicknesses are not to exceed 5" or be lower than 3".

5. Any delineator posts, light poles or roadway signs that are damaged during construction are to be replaced at the contractor's expense. Signs that appear to have no visible damage but that are leaning are to be reset as directed by the Engineer. It is the contractor's responsibility to remove and replace signs as needed to complete the guardrail, shoulder work, etc.. Payment for this work will be considered incidental to the contract.

6. Asphalt Pavement Ride Quality requirements, in accordance with section 410 category "A" of the Standard Specifications, shall apply on this project.

7. Portable Changeable Message Boards furnished by the contractor shall be retained by the contractor upon completion of the project.

8. INLAID PAVEMENT MARKERS (IPMs) will be used in lieu of Type 5 Pavement Markers on this job. Place two (2) IPMs per groove where Type 5 Pavement Markers would be located according to the Standard Drawings. Existing pavement marker removal shall be incidental to ASPHALT PAVE MILLING & TEXTURING.

9. There is a quantity of “LEVEL & WEDGING PG 64-22” set up to correct irregularities. The quantity for irregularities may or may not be necessary and will be placed at the discretion of the Engineer.

10. There is additional quantity of “ASPH PAVE MILLING & TEXTURING”, “CL4 ASPH BASE 1.00D PG76-22”, etc. set up to be placed if needed as directed by the Engineer.

11. Trenched locations must set for at least 30 calendar days before permanent surface can be placed over it.

12. The speed limit on this project will be reduced to 55 mph while lane closures are in place. Any time work is suspended the speed limit will revert back to 70 mph. Also, double fine signs are set up in the project to be installed while workers are present in the work zone.

13. Asphalt Millings from the project shall become the property of the Contractor. The transfer to the Contractor shall all be incidental to “ASPH PAVE MILLING & TEXTURING”.

14. The specified completion date for this project is July 31, 2015. Contrary to section 108, liquidated damages will be charged during the months of December 2015 through March 2016. Some urgent Base Failure Repairs are denoted in the table summaries to be completed by November 30, 2014. Liquidated Damages of $5,000 per calendar day will be assessed for each day these Base Failure Repairs remain uncompleted beyond November 30, 2014. Contrary to section 108, liquidated damages will be charged during the months of December 2014 through March 2015.

TRAFFIC CONTROL PLAN
GRANT COUNTY
I75
FD52 041 0075 152 167
Item Nos. 6-2047

THIS PROJECT IS A FULLY CONTROLLED ACCESS HIGHWAY

TRAFFIC CONTROL GENERAL

Except as provided herein, “Maintain and Control Traffic” shall be in accordance with the 2012 Standard Specifications and the Standard Drawings, current editions. Except for the roadway and traffic control bid items listed, all items of work necessary to maintain and control traffic will be paid at the lump sum bid price to "Maintain and Control Traffic". All lane closures used on the Project will be in compliance with the appropriate Standard Drawings. Do NOT use cones for lane closures or shoulder closures.

Contrary to Section 106.01, traffic control devices used on this project may be new, or used in like new condition at the beginning of the work and maintained in like new condition until completion of the work. Traffic control devices will conform to current MUTCD.

Reduce the speed limit in work areas to 55 miles per hour (35 miles per hour for ramps) and establish double fines for work zone speeding violations. The extent of these areas within the project limits will be restricted to the proximity of actual work areas as determined by the Engineer. Notify the Engineer a minimum of 12 hours prior to using the double fine signs. At the beginning of the work zone, the “WARNING FINE DOUBLED IN WORK ZONE” signs will be dual mounted. At the end of the work zone, the “END DOUBLE FINE” signs will be dual mounted as well. Remove or cover the signs when the highway work zone does not have workers present for more than a two-hour period of time. Payment for the signs will be at the unit bid price for signs erected. Any relocation or covering of the signs will be incidental to “Maintain and Control Traffic,” lump sum.

Night work will be allowed on this project. Obtain approval from the Engineer for the method of lighting prior to its use.

PROJECT PHASING & CONSTRUCTION PROCEDURES

No lane closures are allowed on the following dates or times:

August 29-September 1,2014
November 27-28, 2014
December 24-26, 2014
December 31, 2014 - January 1, 2015
May 22-25, 2015
July 8-12, 2015

July 3-5, 2015

The Engineer may specify additional days and hours when lane closures are not allowed. Traffic may be reduced to two lanes in each direction at all other times. Traffic may be reduced to one lane in each direction if needed at the following times:

Mon-Thu	12am – 6am,	8pm – 12am
Friday	12am – 6am,	10pm – 12am
Sat-Sun	12am – 9am,	9pm – 12am

Only one ramp can be closed at a time from 12 am through 5 am on any day of the week, and only one full closure is allowed per ramp. Part width construction with traffic open can also be used on the ramps to complete work. All closures must be approved by the Engineer at least 14 days prior to the closure.

Note that lane closures are required for the project. Stripe and taper according to the MUTCD and Standard Drawings.

During the days and hours when a lane closure is allowed, implement the following procedures: Maintain traffic as specified in the phasing notes and typical sections.

The contractor must notify the Engineer at least fourteen (14) days prior to the beginning of each construction phase in either direction and any lane or ramp closure.

During the days when a lane closure is allowed, maintain traffic as specified in the phasing notes and typical sections. Please refer to the "Special Note for Fixed Completion Date and Liquidated Damages" for damage rates per hour associated with failure to maintain the required number of lanes during a specific time period.

LANE CLOSURES

Limit the lengths of lane closures to only that needed for actual operations in accordance with the phasing specified herein, or as directed by the Engineer with a minimum of one mile between successive lane closures. Contrary to section 112, lane closures will **NOT** be measured for payment, but are considered incidental to "Maintain and Control Traffic," lump sum.

SIGNS

Additional traffic control signs in addition to normal lane closure signing detailed on the Standard Drawings may be required by the Engineer. Additional signs needed for lane closures may include, but are not limited to, dual mounted TRUCKS USE LEFT/RIGHT LANE, LEFT/RIGHT LANE CLOSED 1 MILE, LEFT/RIGHT LANE CLOSED 2 MILE, LEFT/RIGHT LANE CLOSED 3 MILE, SLOWED/STOPPED TRAFFIC AHEAD. Signage for reduced speed limits and double fine

work zones will be furnished, relocated, and maintained by the Contractor.

Contrary to section 112, Individual signs will be measured only once for payment, regardless of how many times they are set, reset, removed, and relocated during the duration of the project. Replacements for damaged signs or signs directed to be replaced by the Engineer due to poor legibility or reflectivity will not be measured for payment.

A quantity of signs has been included for lane shifts, “Roadwork Ahead” signs on entrance ramps, and extra double fine signs and speed limit signs between interchanges to be paid only once no matter how many times they are moved or relocated.

FLASHING ARROWS

The Department **WILL NOT** take possession of the flashing arrows upon completion of the work.

PORTABLE CHANGEABLE MESSAGE SIGNS

Provide portable changeable message signs (PCMS) in advance of and within the project at locations to be determined by the Engineer. If work is in progress concurrently in both directions, or if more than one lane closure is in place in the same direction of travel, provide additional PCMS. **Place PCMS one mile in advance of the anticipated queue at each lane closure. As the actual queue lengthens and/or shortens relocate or provide additional PCMS so that traffic has warning of slowed or stopped traffic at least one mile but not more than two miles before reaching the end of the actual queue. The locations designated may vary as the work progresses.** The messages required to be provided will be designated by the Engineer. The PCMS will be in operation at all times. In the event of damage or mechanical/electrical failure, the contractor will repair or replace the PCMS immediately. PCMS will be paid for once, no matter how many times they are moved or relocated. The Department **WILL NOT** take possession of the signs upon completion of the work.

TRUCK MOUNTED ATTENUATORS

Furnish and install MUTCD approved truck mounted attenuators (TMA) in advance of work areas when workers are present less than 12 feet from traffic. If there is less than 500 feet between work sites, only a single TMA will be required at a location directed by the Engineer. Locate the TMAs at the individual work sites and move them as the work zone moves within the project limits. All details of the TMA installations shall be approved by the Engineer. TMA will be paid for as “TRUCK MOUNTED ATTENUATOR”. The Department **WILL NOT** take possession of the TMAs upon completion of the work.

PAVEMENT MARKINGS

If lane closures are in place during nighttime hours, remove or cover the lenses of pavement markers that do not conform to the traffic control scheme in use, or as directed by the Engineer.

Replace or uncover lenses before a closed lane is reopened to traffic. No direct payment will be made for removing and replacing or covering and uncovering the lenses, but will be incidental to "Maintain and Control Traffic," lump sum.

Place temporary and permanent striping in accordance with Section 112, except that:

1. Temporary and permanent striping will be 6" in width
2. If the contractor's operations or phasing requires temporary markings which must be subsequently removed from the ultimate pavement, an approved removable lane tape will be used.
3. Edge lines will be required for temporary striping
4. Existing, temporary, or permanent striping will be in place before a lane is opened to traffic
5. Place permanent striping on bridge decks and pavement within the project limits.
6. Permanent striping will be Durable Waterborne Markings

Should the Contractor change the existing striping pattern, the Contractor is to restripe the roadway back to its original configuration after a certain period of time especially if no work is anticipated for a period of time (i.e. Winter shutdown).

PAVEMENT EDGE DROP-OFFS

Pavement edge drop-offs will be protected by a lane or shoulder closure. Lane closures will be protected with plastic drums, vertical panels, or barricades as shown on the Standard Drawings.

Pavement edges that traffic is not expected to cross, except accidentally, shall be treated as follows:

Less than 2” – Protect with a lane closure.

2” to 4” – Protect with a lane closure. Place plastic drums, vertical panels, or barricades every 50 feet. Cones may not be used in place of plastic drums, panels, and barricades at any time. Construct a wedge with compacted cuttings from milling, trenching, or asphalt mixtures with a 3:1 or flatter slope, when work is not active in the drop-off area. Place Type III Barricades at the beginning of the lane closures, and place additional Type III Barricades spaced at 2,500 feet during the time the lane closure is in place. Type III Barricades will be paid as “BARRICADE-TYPE III.”

Greater than 4” – Pavement Repair areas – In areas where pavement is to be removed, work should proceed continuously so that traffic is exposed to a drop-off for the minimum amount of time necessary to bring the pavement back up to existing grade. Barrel spacing should be 20 feet and appropriate lighting should be utilized to illuminate the area during nighttime operations.

Approximate proposed full depth base failure repair locations are listed in the proposal. The Engineer will determine the exact location at the time of construction. Once removal of pavement at a particular repair location has begun, work continuously to complete the work and eliminate the "hole". Place Type III Barricades immediately in front of pavement removal areas. Type III Barricades will be paid as "BARRICADE-TYPE III." All other materials, items and work required to protect pavement drop-offs shall be incidental to "Maintain and Control Traffic".

TRAFFIC COORDINATOR

Designate an employee to be traffic coordinator. The designated Traffic Coordinator must be certified by the American Traffic Safety Services Association (ATSSA). The Traffic Coordinator will inspect the project maintenance of traffic once daily, including weekends, during the Contractor's operations and at any time a lane closure is in place. The Traffic Coordinator will report all incidents throughout the work zone to the Engineer on the project. The Contractor will furnish the name and telephone number where the Traffic Coordinator can be contacted at all times.

During any period when a lane closure is in place, the Traffic Coordinator will arrange for personnel to be present on the project at all times to inspect the traffic control, maintain the signing and devices, and relocate portable changeable message boards as queue lengths change. The personnel will have access on the project to a radio or telephone to be used in case of emergencies or accidents.

COORDINATION OF WORK

The Contractor is advised that other projects may be in progress within or in the near vicinity of this project. The traffic control of those projects may affect this project and the traffic control of this project may affect those projects. The Contractor will coordinate the work on this project with the work of the other contractors. In case of conflict, the Engineer will determine the relative priority to give to work phasing on the various projects.

CONTRACTOR'S AND CONTRACTOR'S EMPLOYEES' VEHICLES

Do not use or allow employees to use median crossovers at any time except when inside lanes are closed for construction. In all other phases of construction, change vehicular direction of travel only at interchanges.

COUNTY OF	ITEM NO.
Grant	6-2047

I75
MAINTENANCE OF TRAFFIC
TYPICAL SECTIONS (MP 157.75-162.6)

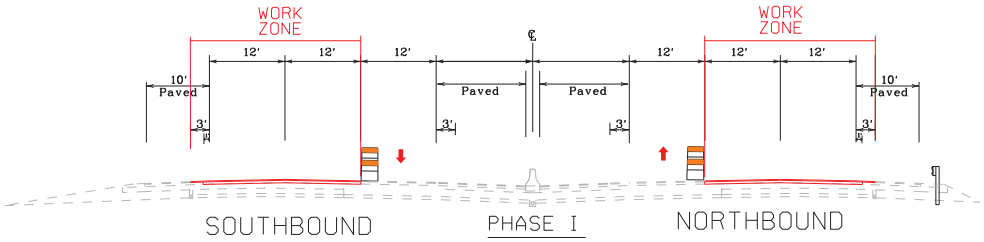

The outside lane and shoulder and middle lane will be closed in both directions. Place any necessary base failure repairs and trenching in the work zone as directed by the Engineer. Mill and Pave the asphalt base and surface in the work zone as shown in the typical sections. Place striping and inlaid pavement markers in accordance with MUTCD and KYTC Standard Drawings. Saw outside shoulder rumble strips. The Contractor must obey time restrictions listed in the Traffic Control Plan when going down to one lane in either direction.

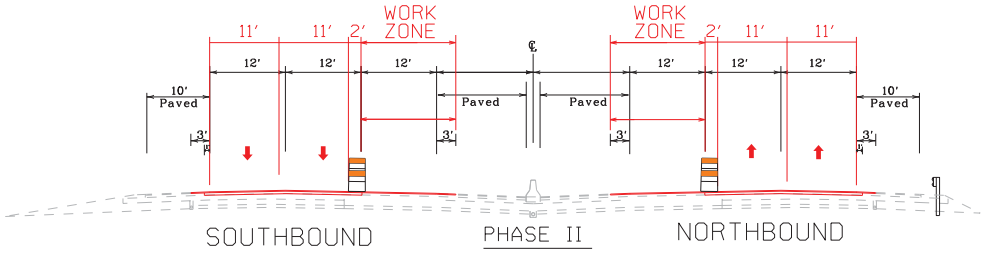

The inside lane and shoulder will be closed in both directions. Place any base failure repairs in the work zone as directed by the Engineer. Mill and Pave the asphalt surface in the work zone as shown in the typical sections. Place striping and inlaid pavement markers in accordance with MUTCD and KYTC Standard Drawings. Saw inside shoulder rumble strips.

NOTE: Base failures setup outside the Resurfacing Area (MP 157.75-162.60), can be done in conjunction with the above phasing and/or when traffic can be reduced to one lane in each direction. The KY 22 ramps shall be paved at times as described in the Traffic Control Plan. All closures must be approved by the ENGINEER at least 14 days prior to the closure.

NOT TO SCALE

I75
MOT TYPICAL SECTIONS

REFERENCES

1. Kentucky Transportation Cabinet, Department of Highways, Standard Specifications for Road and Bridge Construction, Edition of 2012.

2. FHWA Manual on Uniform Traffic Control Devices (MUTCD), latest edition.

3*. Active Sepia List

Drawing No.	Drawing Name
1	Delineators at Narrow Shoulder Bridges
11	Shoulder Rumble Strips

4*. Kentucky Department of Highways Standard Drawings, current editions, as applicable:

RGS-002-05 Superelevation for Multilane
Pavement RGX-001-05 Miscellaneous
Standards Part I
RGX-060 Breakaway Sign Support System For Type
C Beam RGX-061 Footing Details For Type C Beam
RGX-065 Type D Breakaway Sign
Support RGX-200 One Point Proctor
Family of Curves
TPM-105-02 Pavement Marker Arrangements Multi-Lane Roadways (Use inlaid in lieu of Type 5 pavement markers)
TPM-125 Pavement Marker Arrangement Exit Gore and Off-Ramp (Use inlaid in lieu of Type 5 pavement markers)
TPM-130 Pavement Marker Arrangement On-Ramp with Tapered Acceleration Lane (Use inlaid in lieu of Type 5 pavement markers)
TPM-135 Pavement Marker Arrangement On-Ramp with Parallel Acceleration Lane (Use inlaid in lieu of Type 5 pavement markers)
TTC-115 Lane Closure Multi-Lane
Highway Case I TTD-110 Post Splicing Detail
TTD-120 Work Zone Speed Limit and Double
Fine Signs TTD-125 Pavement Condition Warning
Signs
TTS-120 Mobile Operation for Durable Striping Case I
RDP-001-05 Perforated Pipe Types and Cover Heights
RDP-005-04 Perforated Pipe For Subgrade Drainage On Two-Lane (Class 2) and Multi-Lane Roads
RDP-006-03 Perforated Pipe Underdrains
RDP-007-03 Perforated Pipe Details (Solid Rock)
RDP-010-08 Perforated Pipe Headwalls
RGS-001-06 Curve Widening and Superelevation Transitions
RPM-001-03 Permanent U-Turn Median Opening
TTC-135-01 Shoulder Closure
TTC-155-01 Temporary Pavement Marker Arrangements For Construction Zones
TTC-160-01 Temporary Pavement Marker Arrangements For Lane Closures
TTS-100-01 Mobile Operation For Paint Striping Case I
TTS-105-01 Mobile Operation For Paint Striping Case II
TTS-110-01 Mobile Operation For Paint Striping Case III

TTS-115-01 Mobile Operation For Paint Striping Case IV
TTS-120-01 Mobile Operation For Durable Striping Case I
TTS-125-01 Mobile Operation For Durable Striping Case II
TTS-130-01 Mobile Operation For Durable Striping Case III
TTS-135-01 Mobile Operation For Durable Striping Case IV

5*. Kentucky Transportation Cabinet, Department of Highways, Standard Specifications for Road and Bridge Construction, Edition of 2012 - Supplemental Specifications, as applicable:

Special Note 1I Portable Changeable Message Signs (6/15/2012)
Special Note Typical Section Dimensions
Special Note Before You Dig
Special Provision For Waste and Borrow Sites
Special Note For Longitudinal Pavement Joint Adhesive
Special Note Fixed Completion Date and Liquidated Damages
Special Note For Asphalt Milling and Texturing
Special Note For Erosion Prevention and Sediment Control
Special Note For Inlaid Pavement Markers (Experimental)
447 Compaction of Asphalt Mixtures

*Note: This is a partial list that may be applicable to this project

Special Note for Fixed Completion Date and Liquidated Damages
Grant County
Item No. 6-2047

Contrary to Section 108.09, Liquidated Damages of $5,000 per calendar day will be assessed for each day work remains uncompleted beyond the Specified Completion Date. This project has a Fixed Completion Date of July 31, 2015. Some urgent Base Failure Repairs are denoted in the table summaries to be completed by November 30, 2014. Liquidated Damages of $5,000 per calendar day will be assessed for each day these Base Failure Repairs remain uncompleted beyond November 30, 2014.

In addition to the Liquidated Damages specified in Section 108.09, Liquidated Damages in the following amounts will be charged when a lane closure remains in place during the prohibited period outlined in the Traffic Control Plan:

$3,000 for the first hour or fraction thereof
$5,000 any additional hour or fraction thereof

Contrary to Section 108.09 of the Standard Specifications, **the disincentive fee will be charged during those periods when seasonal limitations of the Contract prohibit the Contractor from working on a controlling item or operation. This includes the months from December through March.**

All liquidated damages will be applied cumulatively.

All other applicable portions of Section 108 apply.

SPECIAL NOTE FOR TYPICAL SECTION DIMENSIONS

I75

The dimensions shown on the typical sections for pavement and shoulder widths are nominal or typical dimensions. The actual dimensions to be constructed may be varied to fit existing conditions as directed or approved by the Engineer. It is not intended that existing pavement or shoulders be widened unless specified elsewhere in the Proposal.

11N

SPECIAL NOTE FOR LONGITUDINAL PAVEMENT JOINT ADHESIVE

1. DESCRIPTION. This specification covers the requirements and practices for applying an asphalt adhesive material to the longitudinal joint of the surface course of an asphalt pavement. Apply the adhesive to the face of longitudinal joint between driving lanes for the first lane paved. Then, place and compact the adjacent lane against the treated face to produce a strong, durable, waterproof longitudinal joint.

2. MATERIALS, EQUIPMENT, AND PERSONNEL.

2.1 Joint Adhesive. Provide material conforming to Subsection 2.1.1.

2.1.1 Provide an adhesive conforming to the following requirements:

Property	Specification	Test Procedure
Viscosity, 400 ° F (Pa·s)	4.0 – 10.0	ASTM D 4402
Cone Penetration, 77 ° F	60 – 100	ASTM D 5329
Flow, 140 ° F (mm)	5.0 max.	ASTM D 5329
Resilience, 77 ° F (%)	30 min.	ASTM D 5329
Ductility, 77 ° F (cm)	30.0 min.	ASTM D 113
Ductility, 39 ° F (cm)	30.0 min.	ASTM D 113
Tensile Adhesion, 77 ° F (%)	500 min.	ASTM D 5329, Type II
Softening Point, ° F	171 min.	AASHTO T 53
Asphalt Compatibility	Pass	ASTM D 5329

Ensure the temperature of the pavement joint adhesive is between 380 and 410 °F when the material is extruded in a 0.125-inch-thick band over the entire face of the longitudinal joint.

2.2. Equipment.

2.2.1 Melter Kettle. Provide an oil-jacketed, double-boiler, melter kettle equipped with any needed agitation and recirculating systems.

2.2.2 Applicator System. Provide a pressure-feed-wand applicator system with an applicator shoe attached.

2.3 Personnel. Ensure a technical representative from the manufacturer of the pavement joint adhesive is present during the initial construction activities and available upon the request of the Engineer.

3. CONSTRUCTION.

3.1 Surface Preparation. Prior to the application of the pavement joint adhesive, ensure the face of the longitudinal joint is thoroughly dry and free from dust or any other debris that would inhibit adhesion. Clean the joint face by the use of compressed air.

Ensure this preparation process occurs shortly before application to prevent the return of debris on the joint face.

3.2 Pavement Joint Adhesive Application. Ensure the ambient temperature is a minimum of 40 ^{o} F during the application of the pavement joint adhesive. Prior to applying the adhesive, demonstrate competence in applying the adhesive according to this note to the satisfaction of the Engineer. Heat the adhesive in the melter kettle to the specified temperature range. Pump the adhesive from the melter kettle through the wand onto the vertical face of the cold joint. Apply the adhesive in a continuous band over the entire face of the longitudinal joint. Do not use excessive material in either thickness or location. Ensure the edge of the extruded adhesive material is flush with the surface of the pavement. Then, place and compact the adjacent lane against the joint face. Remove any excessive material extruded from the joint after compaction (a small line of material may remain).

3.3 Pavement Joint Adhesive Certification. Furnish the joint adhesive's certification to the Engineer stating the material conforms to all requirements herein prior to use.

3.4 Sampling and Testing. The Department will require a random sample of pavement joint adhesive from each manufacturer's lot of material. Extrude two 5 lb. samples of the heated material and forward the sample to the Division of Materials for testing. Reynolds oven bags, turkey size, placed inside small cardboard boxes or cement cylinder molds have been found suitable. Ensure the product temperature is 400°F or below at the time of sampling.

4. MEASUREMENT. The Department will measure the quantity of Pavement Joint Adhesive in linear feet. The Department will not measure for payment any extra materials, labor, methods, equipment, or construction techniques used to satisfy the requirements of this note. The Department will not measure for payment any trial applications of Pavement Joint Adhesive, the cleaning of the joint face, or furnishing and placing the adhesive. The Department will consider all such items incidental to the Pavement Joint Adhesive.

5. PAYMENT. The Department will pay for the Pavement Joint Adhesive at the Contract unit bid price and apply an adjustment for each manufacturer's lot of material based on the degree of compliance as defined in the following schedule. When a sample fails on two or more tests, the Department may add the deductions, but the total deduction will not exceed 100 percent.

11N

Pavement Joint Adhesive Price Adjustment Schedule						
Test	Specification	100% Pay	90% Pay	80% Pay	50% Pay	0% Pay
Joint Adhesive Referenced in Subsection 2.1.1						
Viscosity, 400 º F (Pa•s)			3.0-3.4	2.5-2.9	2.0-2.4	≤1.9
ASTM D 3236	4.0-10.0	3.5-10.5	10.6-11.0	11.1-11.5	11.6-12.0	≥ 12.1
Cone Penetration, 77 º F			54-56	51-53	48-50	≤ 47
ASTM D 5329	60-100	57-103	104-106	107-109	110-112	≥ 113
Flow, 140 º F (mm) ASTM D 5329	≤ 5.0	≤ 5.5	5.6-6.0	6.1-6.5	6.6-7.0	≥ 7.1
Resilience, 77 º F (%) ASTM D 5329	≥ 30	≥ 28	26-27	24-25	22-23	≤ 21
Tensile Adhesion, 77 º F (%) ASTM D 5329	≥ 500	≥ 490	480-489	470-479	460-469	≤ 459
Softening Point, º F AASHTO T 53	≥ 171	≥ 169	166-168	163-165	160-162	≤ 159
Ductility, 77 º F (cm) ASTM D 113	≥ 30.0	≥ 29.0	28.0-28.9	27.0-27.9	26.0-26.9	≤ 25.9
Ductility, 39 º F (cm) ASTM D 113	≥ 30.0	≥ 29.0	28.0-28.9	27.0-27.9	26.0-26.9	≤ 25.9

Code	Pay Item	Pay Unit
20071EC	Joint Adhesive	Linear Foot

May 7, 2014

1I

SPECIAL NOTE FOR PORTABLE CHANGEABLE MESSAGE SIGNS

This Special Note will apply when indicated on the plans or in the proposal.

1.0 DESCRIPTION. Furnish, install, operate, and maintain variable message signs at the locations shown on the plans or designated by the Engineer. Remove and retain possession of variable message signs when they are no longer needed on the project.

2.0 MATERIALS.

2.1 General. Use LED Variable Message Signs Class I, II, or III, as appropriate, from the Department's List of Approved Materials.

Unclassified signs may be submitted for approval by the Engineer. The Engineer may require a daytime and nighttime demonstration. The Engineer will make a final decision within 30 days after all required information is received.

2.2 Sign and Controls. All signs must:

1) Provide 3-line messages with each line being 8 characters long and at least 18 inches tall. Each character comprises 35 pixels.
2) Provide at least 40 preprogrammed messages available for use at any time. Provide for quick and easy change of the displayed message; editing of the message; and additions of new messages.
3) Provide a controller consisting of:
   a) Keyboard or keypad.
   b) Readout that mimics the actual sign display. (When LCD or LCD type readout is used, include backlighting and heating or otherwise arrange for viewing in cold temperatures.)
   c) Non-volatile memory or suitable memory with battery backup for storing pre-programmed messages.
   d) Logic circuitry to control the sequence of messages and flash rate.
4) Provide a serial interface that is capable of supporting complete remote control ability through land line and cellular telephone operation. Include communication software capable of immediately updating the message, providing complete sign status, and allowing message library queries and updates.
5) Allow a single person easily to raise the sign to a satisfactory height above the pavement during use, and lower the sign during travel.
6) Be Highway Orange on all exterior surfaces of the trailer, supports, and controller cabinet.
7) Provide operation in ambient temperatures from -30 to + 120 degrees Fahrenheit during snow, rain and other inclement weather.
8) Provide the driver board as part of a module. All modules are interchangeable, and have plug and socket arrangements for disconnection and reconnection. Printed circuit boards associated with driver boards have a conformable coating to protect against moisture.
9) Provide a sign case sealed against rain, snow, dust, insects, etc. The lens is UV stabilized clear plastic (polycarbonate, acrylic, or other approved material) angled to prevent glare.
10) Provide a flat black UV protected coating on the sign hardware, character PCB, and appropriate lens areas.

11) Provide a photocell control to provide automatic dimming.
12) Allow an on-off flashing sequence at an adjustable rate.
13) Provide a sight to aim the message.
14) Provide a LED display color of approximately 590 nm amber.
15) Provide a controller that is password protected.
16) Provide a security device that prevents unauthorized individuals from accessing the controller.
17) Provide the following 3-line messages preprogrammed and available for use when the sign unit begins operation:

/KEEP/RIGHT/⇒⇒⇒/
/KEEP/LEFT/⇐⇐⇐/
/LOOSE/GRAVEL/AHEAD/
/RD WORK/NEXT/**MILES/
/TWO WAY/TRAFFIC/AHEAD/
/PAINT/CREW/AHEAD/
/REDUCE/SPEED/**MPH/
/BRIDGE/WORK/***0 FT/
/MAX/SPEED/**MPH/
/SURVEY/PARTY/AHEAD/
/MIN/SPEED/**MPH/
/ICY/BRIDGE/AHEAD/ /ONE LANE/BRIDGE/AHEAD/
/ROUGH/ROAD/AHEAD/
/MERGING/TRAFFIC/AHEAD/
/NEXT/***/MILES/
/HEAVY/TRAFFIC/AHEAD/
/SPEED/LIMIT/**MPH/
/BUMP/AHEAD/
/TWO/WAY/TRAFFIC/

*Insert numerals as directed by the Engineer.
Add other messages during the project when required by the Engineer.

2.3 Power.

1) Design solar panels to yield 10 percent or greater additional charge than sign consumption. Provide direct wiring for operation of the sign or arrow board from an external power source to provide energy backup for 21 days without sunlight and an on-board system charger with the ability to recharge completely discharged batteries in 24 hours.

3.0 CONSTRUCTION. Furnish and operate the variable message signs as designated on the plans or by the Engineer. Ensure the bottom of the message panel is a minimum of 7 feet above the roadway in urban areas and 5 feet above in rural areas when operating. Use Class I, II, or III signs on roads with a speed limit less than 55 mph. Use Class I or II signs on roads with speed limits 55 mph or greater.

Maintain the sign in proper working order, including repair of any damage done by others, until completion of the project. When the sign becomes inoperative, immediately repair or replace the sign. Repetitive problems with the same unit will be cause for rejection and replacement.

Use only project related messages and messages directed by the Engineer, unnecessary messages lessen the impact of the sign. Ensure the message is displayed in either one or 2 phases with each phase having no more than 3 lines of text. When no message is needed, but it is necessary to know if the sign is operable, flash only a pixel.

When the sign is not needed, move it outside the clear zone or where the Engineer directs. Variable Message Signs are the property of the Contractor and shall be removed from the project when no longer needed. The Department will not assume ownership of these signs.

1I

4.0 MEASUREMENT. The final quantity of Variable Message Sign will be the actual number of individual signs acceptably furnished and operated during the project. The Department will not measure signs replaced due to damage or rejection.

5.0 PAYMENT. The Department will pay for the Variable Message Signs at the unit price each. The Department will not pay for signs replaced due to damage or rejection. Payment is full compensation for furnishing all materials, labor, equipment, and service necessary to, operate, move, repair, and maintain or replace the variable message signs. The Department will make payment for the completed and accepted quantities under the following:

Code	Pay Item	Pay Unit
02671	Portable Changeable Message Sign	Each

Effective June 15, 2012

SPECIAL NOTE
UTILITIES

BEFORE YOU DIG

The contractor is instructed to call 1-800-752-6007 to reach KY 811, the one-call system for information on the location of existing underground utilities. The call is to be placed a minimum of two (2) and no more than ten (10) business days prior to excavation. The contractor should be aware that owners of underground facilities are not required to be members of the KY 811 one-call Before-U-Dig (BUD) service. The contractor must coordinate excavation with the utility owners, including those whom do not subscribe to KY 811. It may be necessary for the contractor to contact the County Court Clerk to determine what utility companies have facilities in the area.

COORDINATION WITH UTILITY FACILITY OWNERS

The Roadway Contractor will be responsible for contacting all utility facility owners on the subject project to have existing facilities located in the field. The Roadway Contractor will coordinate his activities with the utility facility owners to minimize and, where possible, avoid conflicts with utility facilities. Where conflicts with utility facilities are unavoidable the Roadway Contractor will coordinate any necessary relocation work with the facility owner.

PROTECTION OF UTILITY FACILITIES

The location of utilities provided in the contact document has been furnished by the facility owners and/or by reviewing record drawings and may not be accurate. It will be the Roadway Contractor’s responsibility to locate the utilities before excavating by calling the various utility owners and by examining any supplemental information supplied by the Cabinet. If necessary, the Roadway Contractor shall determine the exact location and elevation of utilities by hand digging to expose utilities before excavating in the area of the utility. The cost for repair and any other associated costs for any damage to utilities caused by the Roadway Contractor’s operation shall be borne by the Roadway Contractor.

SPECIAL PROVISION FOR WASTE AND BORROW SITES

The contractor is advised that it is their responsibility to gain U.S. Army Corp of Engineer's approval before utilizing a waste or borrow site that involves "Waters of the United States". "Waters of the United States" are defined as perennial or intermittent streams, ponds or wetlands. Ephemeral streams are also considered jurisdictional waters, and are typically dry except during rainfall, but have a defined drainage channel. Questions concerning any potential impacts to "Waters…" should be brought to the attention of the appropriate District Office for the Corps of Engineers for a determination, prior to disturbance. Any fees associated with obtaining approval from the U.S. Army Corp of Engineer or other appropriate regulatory agencies for waste and borrow sites is the responsibility of the contractor.

01/01/2009

SPECIAL NOTE FOR
ASPHALT MILLING AND TEXTURING

Asphalt Millings from the project shall become the property of the Contractor.

SPECIAL NOTE FOR INLAID PAVEMENT MARKERS (EXPERIMENTAL)

I. DESCRIPTION.

Except as provided herein, perform all work in accordance with the Department's Standard and Supplemental Specifications and applicable Standard and Sepia Drawings, current editions. Article references are to the Standard Specifications. This work shall consist of:

(1) Maintain and Control Traffic; and (2) Furnish and install Inlaid Pavement Markers (IPMs) in recessed grooves; and (3) Any other work as specified by these notes and the Contract.

II. MATERIALS.

The Department will sample all materials in accordance with the Department's Sampling Manual. Make the materials available for sampling a sufficient time in advance of the use of the materials to allow for the necessary time for testing unless otherwise specified in these Notes.

A. Maintain and Control Traffic. See Traffic Control Plan.

B. Markers. Use Marker One Model R-100 or approved equal mono-directional white, bi-directional yellow, and mono-directional yellow type markers. Provide reflective lenses with depth control breakaway positioning tabs. Before furnishing the markers, provide to the Engineer the manufacturer’s current recommendations for adhesives and installation procedures. Use one brand and design throughout the project.

C. Adhesives. Use adhesives that conform to the manufacturer’s recommendations.

III. CONSTRUCTION

A. Experimental Evaluation. The University of Kentucky Transportation Center will be evaluating this experimental installation of IPMs. Notify the Engineer a minimum of 14 calendar days prior to beginning work. The Engineer will coordinate the University’s activities with the Contractor’s work.

B. Maintain and Control Traffic. See Traffic Control Plan.

C. Installation. Install IPMs in recessed grooves cut into the final course of asphalt pavement according to the manufacturer’s recommendations. Do not cut the grooves until the pavement has cured sufficiently to prevent tearing or raveling. Remove all dirt, grease, oil, loose or unsound layers, and any other material from the marker area which

would reduce the bond of the adhesive. Maintain pavement surfaces in a clean condition until placing markers.

Prepare the pavement surfaces, and install the markers in the recessed groove according to the manufacturer's recommendations. Ensure that the adhesive bed area is equal to the bottom area of the marker, and apply adhesive in sufficient quantity to force excess out around the entire perimeter of the marker. Use materials, equipment, and construction procedures that ensure proper adhesion of the markers to the pavement surface according to the manufacturer's recommendations. Remove all excess adhesive from in front of the reflective faces. If any adhesive or foreign matter cannot be removed from the reflective faces, or if any marker fails to properly adhere to the pavement surface, remove and replace the marker at no additional cost to the Department.

D. Location and Spacing. Install the markers in the pattern for High Reflectivity Option with two (2) IPMs per groove. Locate and space markers as shown on the drawing. Do not install markers on bridge decks. Do not install a marker on top of a pavement joint or crack. Offset the recessed groove a minimum of 2 inches from any longitudinal pavement joint or crack and at least one inch from the painted stripe, ensuring that the finished line of markers is straight with minimal lateral deviation. Give preference to maintaining the 2-inch offset between recessed groove and joint as opposed to keeping the line of markers straight.

Place inlaid markers as much in line with existing pavement striping as possible. Place markers installed along an edge line or channelizing line so that the near edge of the plastic housing is no more than one inch from the near edge of the line. Place markers installed along a lane line between and in line with the dashes. Do not place markers over the lines except where the lines deviate visibly from their correct alignment, and then only after obtaining the Engineer's prior approval of the location.

If conflicts between recessed groove placement in relation to pavement joint and striping cannot be resolved, obtain the Engineer's approval to eliminate the marker or revise the alignment.

E. Disposal of Waste. Dispose of all removed asphalt pavement, debris, and other waste at sites off the right of way obtained by the Contractor at no additional cost to the Department. See Special Note for waste and Borrow.

F. Restoration. Be responsible for all damage to public and/or private property resulting from the work. Restore all damaged features in like kind materials and design at no additional cost to the Department.

G. On-Site Inspection. Make a thorough inspection of the site prior to submitting a bid and be thoroughly familiar with existing conditions so that the work can be expeditiously performed after a contract is awarded. The Department will consider submission of a bid as evidence of this inspection having been made and will not honor any claims for money or grant Contract time extensions resulting from site conditions.

H. Caution. Do not take information shown on the drawings and in this proposal and the types and quantities of work listed as an accurate or complete evaluation of the material and conditions to be encountered during construction, but consider the types and quantities of work listed as approximate only. The bidder must draw his own conclusion as to the conditions encountered. The Department does not give any guarantee as to the accuracy of the data and no claim will be considered for additional compensation or extension of Contract time if the conditions encountered are not in accordance with the information shown.

IV. MEASUREMENT

A. Maintain and Control Traffic. See Traffic Control Plan.

B. Inlaid Pavement Markers. The Department will measure only the bid items listed. The Department will measure the quantity of IPMs of each type by individual marker, each. The Department will not measure grooving pavement, removal of asphalt cuttings and debris, preheating pavement to remove moisture, adhesives, or lenses, but shall be incidental to the Inlaid Pavement Markers.

V. PAYMENT

A. Maintain and Control Traffic. See Traffic Control Plan.

B. Inlaid Pavement Markers. The Department will make payment for the completed and accepted quantity of IPMs Markers at the Contract unit price, each. Accept payment as full compensation for all labor, equipment, materials, and incidentals to accomplish this work to the satisfaction of the Engineer. The all markers shall be paid as “INLAID PAVEMENT MARKER”. The bid item “INLAID PAVEMENT MARKER” shall be used regardless of the color and type of lenses required.

447 COMPACTION OF ASPHALT MIXTURES

WILL ACCEPT THE COMPACTION OF ASPHALT MIXTURES FURNISHED FOR DRIVING LANES AND RAMPS AT ONE INCH (25 MM) OR GREATER ON THIS PROJECT BY OPTION A ACCORDING TO SUBSECTIONS 402 AND 403 OF THE CURRENT STANDARD SPECIFICATIONS. USE JOINT CORES AS DESCRIBED IN SUBSECTION 402.03.02 FOR SURFACE MIXTURES ONLY. WILL ACCEPT THE COMPACTION OF ALL OTHER ASPHALT MIXTURES BY OPTION B.

GRANT CO. I-75 ~m.p. 153.65
~LAT/LONG N38.618675, W84.571987
STATION 261

SITE LOCATION IS APPROXIMATE AND WILL BE DETERMINED IN THE FIELD AND APPROVED BY DIVISION OF PLANNING PERSONNEL PRIOR TO ANY CONSTRUCTION.

ALL LOOPS SHALL BE 6'X6' SQUARE AND SHALL BE INSTALLED 16' FROM LEADING EDGE TO LEADING EDGE AS SHOWN. PIEZOELECTRIC SENSORS (PIEZOS) SHALL BE INSTALLED 5' FROM THE EDGE OF LOOPS WITH THE EDGE OF EACH PIEZO FLUSH WITH THE EDGE OF THE CORRESPONDING DRIVING LANE. LOOPS AND PIEZOS SHALL BE INSTALLED SPLICE-FREE TO THE CABINET AND A MINIMUM OF 2' OF WIRE FOR EACH SENSOR SHALL BE COILED INSIDE EACH JUNCTION BOX AND CABINET. ALL LOOPS AND PIEZOS SHALL BE LABELED IN ALL JUNCTION BOXES AND CABINET. DIVISION OF PLANNING PERSONNEL WILL CONNECT THE LOOPS AND PIEZOS INSIDE THE CABINET.

INSTALL ONE (1) 1¼" CONDUIT FROM EACH SAW SLOT TO NEAREST JUNCTION BOX.

INSTALL TWO (2) TYPE A JUNCTION BOXES (JB A1 AND A2).

INSTALL TWO (2) 20"X20"X8" CABINETS MOUNTED TO TWO (2) WOOD POSTS (EACH).

REMOVE ALL EX. TRAFFIC DATA COLLECTION EQUIPMENT (CABINETS, JUNCTION BOXES, CONDUIT, WIRE, ETC.) AND DISPOSE OF OFF THE PROJECT.

CODED NOTE:

(1) INSTALL ONE (1) 2" CONDUIT.

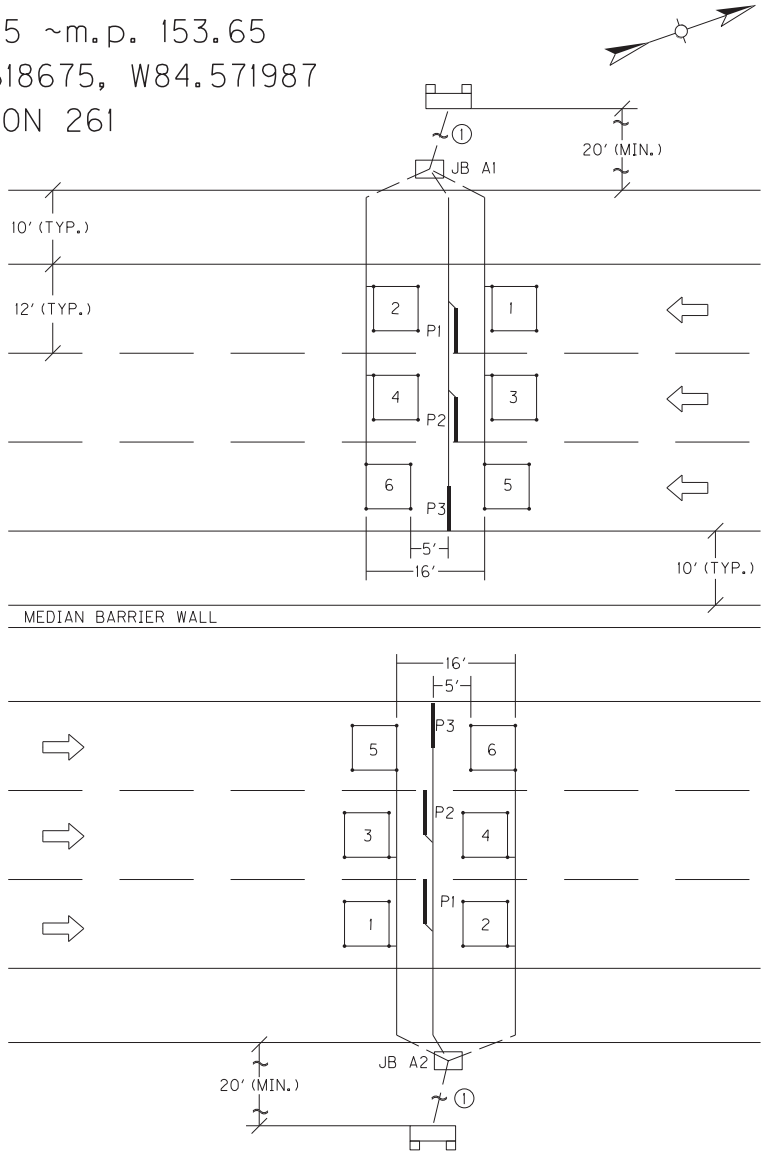

SCALE 1"=20'

GRANT CO. I-75 ~m.p. 155.0
~LAT/LONG (NB) N 38.636711, W 84.580803
~LAT/LONG (SB) N 38.637242, W 84.583005
STATION 368

SITE LOCATION IS APPROXIMATE AND WILL BE DETERMINED IN THE FIELD AND APPROVED BY DIVISION OF PLANNING PERSONNEL PRIOR TO ANY CONSTRUCTION.

ALL LOOPS SHALL BE 6'X6' SQUARE AND SHALL BE INSTALLED 16' FROM LEADING EDGE TO LEADING EDGE AS SHOWN. PIEZOELECTRIC SENSORS (PIEZOS) SHALL BE INSTALLED 5' FROM THE EDGE OF LOOPS WITH THE EDGE OF EACH PIEZO FLUSH WITH THE EDGE OF THE CORRESPONDING DRIVING LANE. LOOPS AND PIEZOS SHALL BE INSTALLED SPLICE-FREE TO THE CABINET AND A MINIMUM OF 2' OF WIRE FOR EACH SENSOR SHALL BE COILED INSIDE EACH JUNCTION BOX AND CABINET. ALL LOOPS AND PIEZOS SHALL BE LABELED IN ALL JUNCTION BOXES AND CABINET. DIVISION OF PLANNING PERSONNEL WILL CONNECT THE LOOPS AND PIEZOS INSIDE THE CABINET.

INSTALL ONE (1) 1¼" CONDUIT FROM EACH SAW SLOT TO NEAREST JUNCTION BOX.

INSTALL TWO (2) TYPE A JUNCTION BOXES (JB A1 AND A2).

INSTALL TWO (2) 20"X20"X8" CABINETS MOUNTED TO TWO (2) WOOD POSTS (EACH).

REMOVE ALL EX. TRAFFIC DATA COLLECTION EQUIPMENT (CABINETS, JUNCTION BOXES, CONDUIT, WIRE, ETC.) AND DISPOSE OF OFF THE PROJECT.

CODED NOTE:

(1) INSTALL ONE (1) 2" CONDUIT.

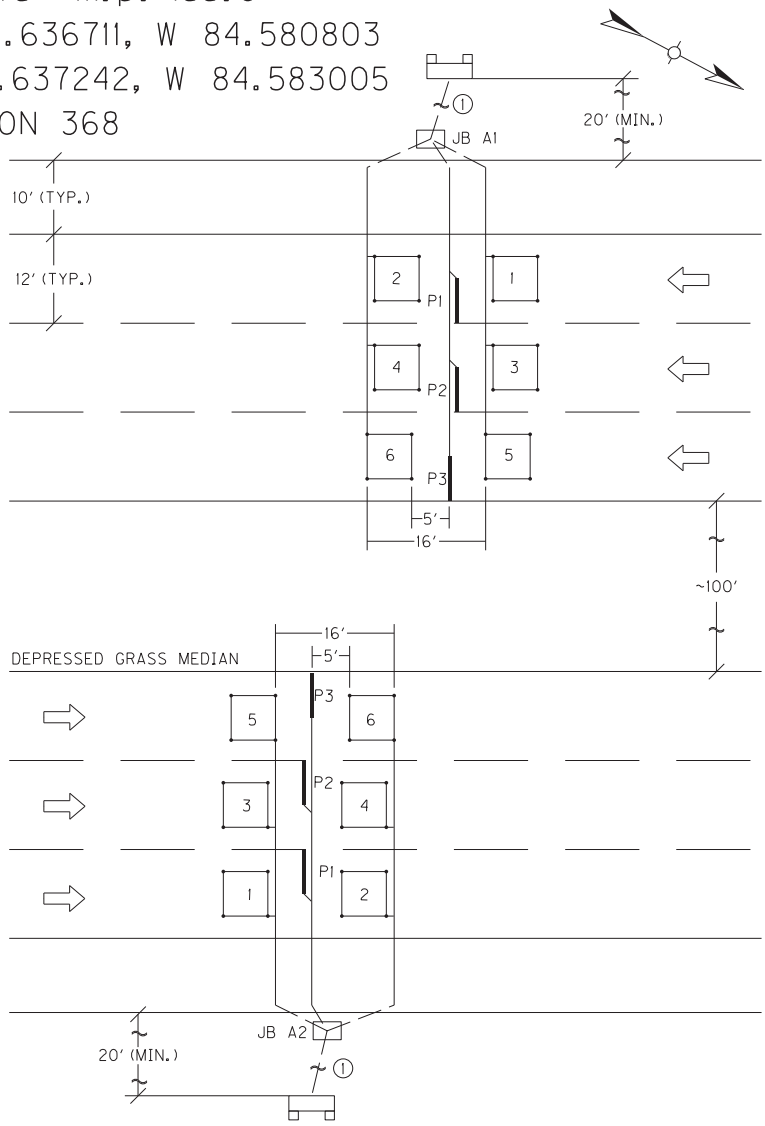

SCALE 1"=20'

GRANT CO. I-75 ~m.p. 156.55
~LAT/LONG N38.658313, W84.586689
STATION 251

SITE LOCATION IS APPROXIMATE AND WILL BE DETERMINED IN THE FIELD AND APPROVED BY DIVISION OF PLANNING PERSONNEL PRIOR TO ANY CONSTRUCTION.

ALL LOOPS SHALL BE 6'X6' SQUARE AND SHALL BE INSTALLED 16' FROM LEADING EDGE TO LEADING EDGE AS SHOWN. PIEZOELECTRIC SENSORS (PIEZOS) SHALL BE INSTALLED 5' FROM THE EDGE OF LOOPS WITH THE EDGE OF EACH PIEZO FLUSH WITH THE EDGE OF THE CORRESPONDING DRIVING LANE. LOOPS AND PIEZOS SHALL BE INSTALLED SPLICE-FREE TO THE CABINET AND A MINIMUM OF 2' OF WIRE FOR EACH SENSOR SHALL BE COILED INSIDE EACH JUNCTION BOX AND CABINET. ALL LOOPS AND PIEZOS SHALL BE LABELED IN ALL JUNCTION BOXES AND CABINET. DIVISION OF PLANNING PERSONNEL WILL CONNECT THE LOOPS AND PIEZOS INSIDE THE CABINET.

INSTALL ONE (1) 1¼" CONDUIT FROM EACH SAW SLOT TO NEAREST JUNCTION BOX.

INSTALL TWO (2) TYPE A JUNCTION BOXES (JB A1 AND A2).

INSTALL TWO (2) 20"X20"X8" CABINETS MOUNTED TO TWO (2) WOOD POSTS (EACH).

REMOVE ALL EX. TRAFFIC DATA COLLECTION EQUIPMENT (CABINETS, JUNCTION BOXES, CONDUIT, WIRE, ETC.). DELIVER EX. BASE MOUNT CABINETS TO PLANNING WAREHOUSE IN FRANKFORT AND DISPOSE OF EVERYTHING ELSE OFF THE PROJECT.

CODED NOTE:

(1) INSTALL ONE (1) 2" CONDUIT.

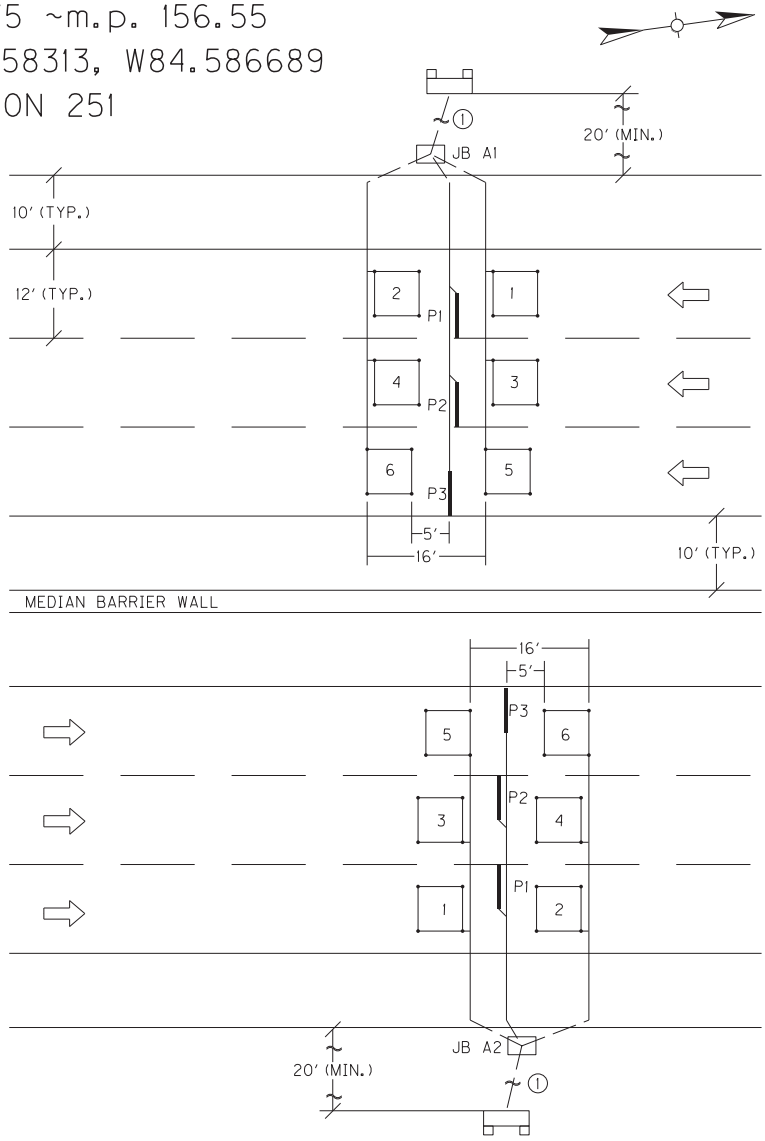

SCALE 1"=20'

GRANT CO. I-75 ~m.p. 164.2
~LAT/LONG N38.658861, W84.586698
STATION P23

SITE LOCATION IS APPROXIMATE AND WILL BE DETERMINED IN THE FIELD AND APPROVED BY DIVISION OF PLANNING PERSONNEL PRIOR TO ANY CONSTRUCTION.

ALL LOOPS SHALL BE 6'X6' SQUARE AND SHALL BE INSTALLED 16' FROM LEADING EDGE TO LEADING EDGE AS SHOWN. PIEZOELECTRIC SENSORS (PIEZOS) SHALL BE INSTALLED 5' FROM THE EDGE OF LOOPS WITH THE EDGE OF EACH PIEZO FLUSH WITH THE EDGE OF THE CORRESPONDING DRIVING LANE. LOOPS AND PIEZOS SHALL BE INSTALLED SPLICE-FREE TO THE CABINET AND A MINIMUM OF 2' OF WIRE FOR EACH SENSOR SHALL BE COILED INSIDE EACH JUNCTION BOX AND CABINET. ALL LOOPS AND PIEZOS SHALL BE LABELED IN ALL JUNCTION BOXES AND CABINET. DIVISION OF PLANNING PERSONNEL WILL CONNECT THE LOOPS AND PIEZOS INSIDE THE CABINET.

INSTALL ONE (1) 1¼" CONDUIT FROM EACH SAW SLOT TO NEAREST JUNCTION BOX.

INSTALL FOUR (4) TYPE A JUNCTION BOXES (JB A1, A2, A3, AND A4) AND TWO (2) TYPE B JUNCTION BOXES (JB B1 AND B2).

INSTALL TWO (2) 20"X20"X8" CABINETS MOUNTED TO TWO (2) WOOD POSTS (EACH).

INSTALL ONE (1) 35' WOOD POLE WITH ONE (1) ELECTRIC SERVICE.

INSTALL MODEL 336 CABINET ON NEWLY INSTALLED POLE.

REMOVE ALL EX. TRAFFIC DATA COLLECTION EQUIPMENT (CABINETS, JUNCTION BOXES, CONDUIT, WIRE, ETC.) AND DISPOSE OF OFF THE PROJECT.

CODED NOTE:

① INSTALL ONE (1) 1¼" CONDUIT.

② INSTALL ONE (1) 2" CONDUIT.

③ BORE AND JACK ONE (1) 2" CONDUIT.

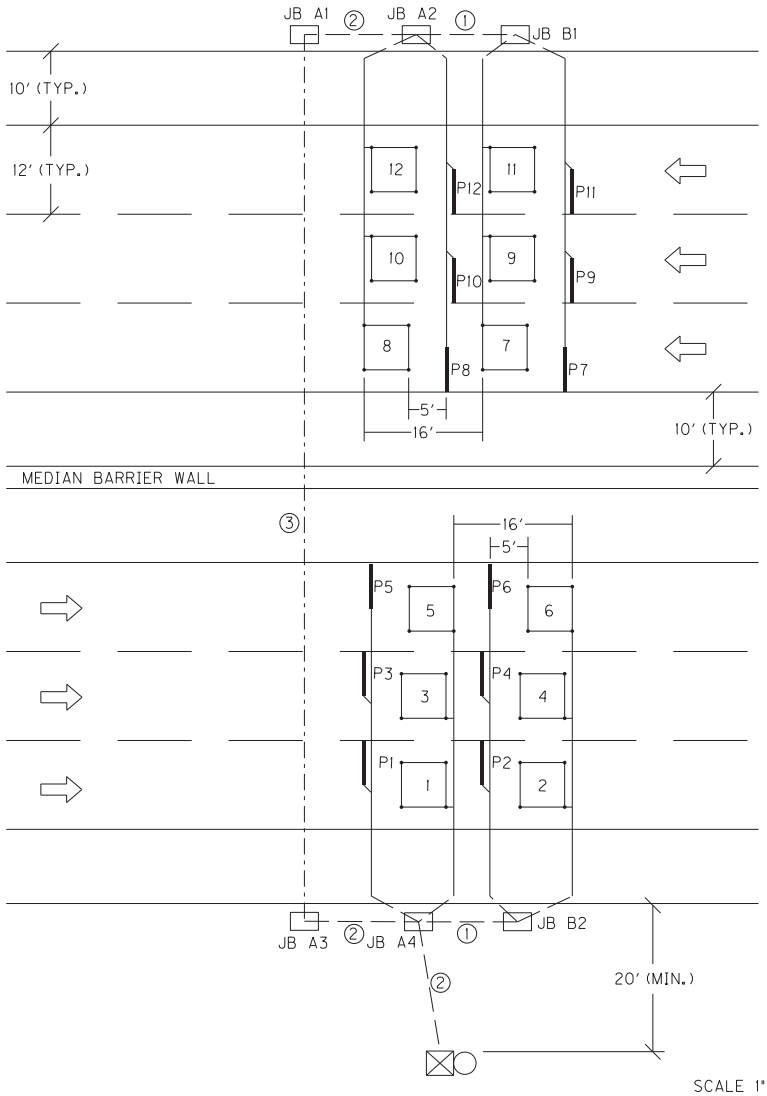

PERMANENT TRAFFIC DATA ACQUISITION STATIONS
ESTIMATE OF QUANTITIES

Bid Item Code	Description	Unit	Quantity
2562	SIGNS	SQ FT	
2650	MAINTAIN AND CONTROL TRAFFIC	LP SUM	
2775	FLASHING ARROW	EACH	
4791	CONDUIT ¾ INCH	LIN FT	
4793	CONDUIT 1 ¼ INCH	LIN FT	320
4795	CONDUIT 2 INCH	LIN FT	240
4810	JUNCTION BOX	EACH	
4811	JUNCTION BOX TYPE B	EACH	2
4820	TRENCHING AND BACKFILLING	LIN FT	490
4821	OPEN CUT ROADWAY	LIN FT	
4829	PIEZOELECTRIC SENSOR	EACH	30
4830	LOOP WIRE	LIN FT	12,600
4850	CABLE NO. 14/1 PAIR	LIN FT	
4871	POLE – 35’ WOODEN	EACH	1
4895	LOOP SAW SLOT AND FILL	LIN FT	2160
4899	ELECTRICAL SERVICE	EACH	1
20213EC	INSTALL PAD MOUNT ENCLOSURE	EACH	
20359EC	GALV STEEL CABINET	EACH	6
20360ES818	WOOD POST	EACH	12
20391ES835	JUNCTION BOX TYPE A	EACH	10
20392ES835	JUNCTION BOX TYPE C	EACH	
20468EC	JUNCTION BOX 10x8x4	EACH	
21543EN	BORE AND JACK PIPE – 2 IN	LIN FT	140
23206EC	INSTALL CONTROLLER CABINET	EACH	1

MATERIAL, INSTALLATION, AND BID ITEM NOTES FOR PERMANENT TRAFFIC DATA ACQUISITION STATIONS

1. DESCRIPTION

Except as specified in these notes, all work shall consist of furnishing and installing all materials necessary for permanent data acquisition station equipment installation(s) and shall be performed in accordance with the current editions of:

- The Contract
- Division of Planning Standard Detail Sheets
- Kentucky Transportation Cabinet, Department of Highways, *Standard Specifications for Road and Bridge Construction*
- Kentucky Transportation Cabinet, Department of Highways, Standard Drawings
- National Fire Protection Association *(NFPA) 70: National Electrical Code*
- Institute of Electrical and Electronic Engineers (IEEE), *National Electrical Safety Code*
- Federal Highway Administration, *Manual on Uniform Traffic Control Devices*
- American Association of State Highway and Transportation Officials (AASHTO), *Roadside Design Guide*.
- Standards of the utility company serving the installation, if applicable

The permanent traffic data acquisition station layout(s) indicate the extent and general arrangement of the proposed installation and are for general guidance. Any omission or commission shown or implied shall not be cause for deviation from the intent of the plans and specifications. Information shown on the plans and in this proposal and the types and quantities of work listed are not to be taken as an accurate or complete evaluation of the material and conditions to be encountered during construction. The bidder must draw his own conclusion as to the conditions encountered. The Department of Highways (Department) does not give any guarantee as to the accuracy of the data and no claim will be considered for additional compensation if the conditions encountered are not in accordance with the information shown. If any modifications of the plans or specifications are considered necessary by the Contractor, details of such modifications and the reasons, therefore, shall be submitted in writing to the Engineer for written approval prior to beginning such modified work.

The Contractor shall contact all utility companies and the district utility agent prior to beginning construction to insure proper clearance and shielding from existing and proposed utilities. The Contractor shall use all possible care in excavating on this project so as not to disturb any existing utilities whether shown on the plans or not shown on the plans. Any utilities disturbed or damaged by the Contractor during construction shall be replaced or repaired to original condition by the Contractor at no cost to the department. If necessary, to avoid existing utilities, the Contractor shall hand dig areas where poles or conduit cross utilities.

The Contractor shall be responsible for all damage to public and/or private property resulting from his work.

The Contractor shall inspect the project site prior to submitting a bid and shall be thoroughly familiarized with existing conditions. Submission of a bid will be considered an affirmation of this inspection having been completed. The Department will not honor any claims resulting from site conditions.

2. MATERIALS

All proposed materials shall be approved prior to being utilized. The Contractor shall submit for material approval an electronic file of descriptive literature, drawings and any requested design data for the proposed materials. After approval, no substitutions of any approved materials may be made without the written approval of the Engineer.

Materials requiring sampling shall be made available a sufficient time in advance of their use to allow for necessary testing.

2.1. Anchoring

2.1.1. Anchor and Anchor Rod

Anchor, except rock anchor, shall be expanding type, with a minimum area of 135 square inches.

Anchor rod shall be galvanized steel, double-eye, have a minimum diameter of 5/8 inches, and a minimum length of 84 inches. Minimum holding capacity shall be 15,400 lbs.

Rock anchor shall be galvanized steel, triple-eye, expanding type, with a minimum diameter of ¾ inch, a minimum 53 inches long, and a minimum tensile strength of 23,000 lb.

2.1.2. Guy Wire and Guy Guard

Guy wire shall be Class A, Zinc-coated, 3/8 inch diameter, high strength grade steel (minimum 10,800 lb.) and galvanized per ASTM A475. Guy guard shall be 8’ long, fully-rounded, yellow, and able to be securely attached to the guy wire.

2.1.3. Strandvise for Guy Wire

Strandvise for guy wire shall be 3/8 inch and rated to hold a minimum of 90% of the rated breaking strength (RBS) of the strand used.

2.2. Asphalt

Asphalt shall be a minimum CL2 Asph Surf 0.38C PG64-22 and conform to the *Standard Specifications for Road and Bridge Construction.*

2.3. Backer Rod

Backer rod shall be ½ inch diameter, closed cell polyethylene foam and shall meet or exceed the following physical properties:

- Density (average): 2.0 lbs/cu.ft. (minimum): ASTM D 1622 test method
- Tensile Strength: 50 PSI (minimum): ASTM D 1623 test method
- Compression Recovery: 90% (minimum): ASTM D 5249 test method
- Water Absorption: 0.03 gm/cc (maximum): ASTM C 1016 test method

2.4. Cabinets

2.4.1. Galvanized Steel Cabinet

Galvanized Steel Cabinet shall be constructed of 16 or 14 gauge galvanized steel and shall meet or exceed the industry standards set forth by UL 50 and NEMA 3R. The finish shall be an ANSI 61 gray polyester powder finish inside and out over the galvanized steel. Cabinet shall have minimum inside dimensions of 20 inches high by 20 inches wide by 8 inches deep.

The cabinet shall be equipped with the following:

- Drip shield top
- Seam-free sides, front, and back, to provide protection in outdoor installations against rain, sleet, and snow
- Hinged cover with 16 gauge galvanized steel continuous stainless steel pin.
- Cover fastened with captive plated steel screws, knob or latch
- Hasp and staple for padlocking
- No gaskets or knockouts
- Back panel for terminal block installation
- Post mounting hardware
- Terminal Blocks

2.4.2. Anchor Bolt for Pad Mounted Cabinet

Anchor bolt for pad mounted cabinet shall be galvanized steel with minimum dimensions of 3/8 inch by 6 inches.

2.5. Concrete

Concrete shall be Class A and conform to the *Standard Specifications for Road and Bridge Construction.*

2.6. Conduit and Conduit Fittings

Conduit and conduit fittings shall be rigid steel unless otherwise specified.

Conduit shall be zinc galvanized inside and out and conform to the NEC, UL Standard 6, and ANSI C-80.1.

Rigid Steel Conduit Fittings shall be galvanized inside and out and conform to the NEC, UL Standard 514B, and ANSI C-80.4. Intermediate Metal Conduit (IMC) will not be approved as an acceptable alternative to rigid steel conduit.

2.7. Conduit sealant

Conduit sealant shall be weather-, mold-, and mildew-resistant and chemically resistant to gasoline, oil, dilute acids and bases. Conduit sealant shall be closed cell type and shall meet or exceed the following properties:

- Cure Time — 20 minutes max.
- Density — 64.4 kg/m3; 6 lbs/ft3
- Compressive Strength (ASTM 1691) — 13.8 MPa; 330 or 300 psi

- Tensile Strength (ASTM 1623) 15.9 MPa; 270 or 250 psi
- Flexural Strength (ASTM D790) 14.5 MPa; 460 or 450 psi
- Service Temperature -20 to 200 F

2.8. Electrical Service Meter Base

Electrical service meter base shall meet or exceed all requirements of the National Electrical Code and the local utility providing the electrical service.

2.9. Electrical Service Disconnect

Electrical service disconnect shall meet or exceed all requirements of the National Electrical Code and the local utility providing the electrical service.

2.10. Flashing Arrow

Flashing Arrow shall conform to the *Standard Specifications for Road and Bridge Construction.*

2.11. Ground Fault Circuit Interrupter (GFCI) Receptacle

Ground Fault Circuit Interrupter Receptacle shall be 2-pole, 3-wire, 20 Amp, 125 Volt, 60 Hz, NEMA 5-20R configuration and meet or exceed the following standards and certifications:

- NEMA WD-1 and WD-6
- UL 498 and 943
- NOM 057
- ANSI C-73

This item shall include a UL listed, 4 inch x4 inch x $2^1/_8$ inch box with ¾ inch side and end knockouts and a 1½ inches deep, single-receptacle cover to house the GFCI receptacle. Box and cover shall be hot rolled, galvanized steel with a minimum thickness of 0.62 inches.

2.12. Grounding

2.12.1. Ground Rod

Ground Rod shall be composite shaft consisting of a pure copper exterior (5 mil minimum) that has been inseparably molten welded to a steel core. Ground Rod shall have a minimum diameter of 5/8 inch, a minimum length of 8 feet and shall be manufactured for the sole purpose of providing electrical grounding.

2.12.2. Ground Rod Clamp

Ground rod shall be equipped with a one piece cast copper or bronze body with a non-ferrous hexagonal head set screw and designed to accommodate a 10 AWG solid through 2 AWG stranded grounding conductor.

2.13. Grout

2.13.1. Grout for Inductive Loop Installation

Grout for inductive loop installation shall be non-shrink, shall meet the requirements of the *Standard Specifications for Road and Bridge Construction*,

and shall be included on the KYTC Division of Materials, *List of Approved Materials*.

2.13.2. Grout for Piezoelectric Sensor Installation

Grout for piezoelectric sensor installation shall be per the piezoelectric sensor manufacturer's recommendation. Grout shall be suitable for installation in both asphalt and Portland cement pavements. Grout shall have a short curing time (tack free in ten minutes; open to traffic in forty minutes; and fully cured within sixty minutes) to prevent unnecessary lane closure time and should be of sufficient consistency to prevent running when applied on road surfaces with a drainage cross slope. Particulate matter within the grout shall not separate or settle and the grout shall not shrink during the curing process.

2.14. Hardware

Except where specified otherwise, all hardware such as nuts, bolts, washers, threaded ends of fastening devices, etc. with a diameter less than 5/8 inch shall be passivated stainless steel, alloy type 316 or type 304. Stainless steel hardware shall meet ASTM F593 and F594 for corrosion resistance. All other nuts and bolts shall meet ASTM A307 and shall be galvanized.

2.14.1. Conduit Strap

Conduit strap shall be double-hole, stainless steel, and sized to support specified conduit. Conduit strap shall attach to wood pole or post with two 2 ¼ inch wood screws.

2.14.2. Mounting Strap for Pole Mount Cabinet

Mounting strap for pole mount cabinet shall be ¾ inch x 0.03 inch stainless steel; equipped with clips or buckles to securely hold strap.

2.14.3. Metal Framing Channel and Fittings

Metal framing channel shall be 1 5/8 inches wide galvanized steel that conforms to ASTM A1011 and ASTM A653. One side of the channel shall have a continuous slot with in-turned edges to accommodate toothed fittings.

Fittings shall be punch pressed from steel plates and conform to ASTM A575 and the physical requirements of ASTM A1011.

2.15. Junction Box

2.15.1. Junction Box Type A, B, or C

Junction Box Type A, B, or C shall meet or exceed ANSI/SCTE 77-2007, Tier 15. Box shall have an open bottom. A removable, non-slip cover marked "PLANNING" shall be equipped with a lifting slot and attached with a minimum of two 3/8 inch stainless steel hex bolts and washers. Type A Box shall have nominal inside dimensions of 13 inches wide by 24 inches long by 18 inches deep. Type B Box shall have nominal inside dimensions of 11 inches wide by 18 inches long by 12

inches deep. Type C Box shall have nominal inside dimensions of 24 inches wide by 36 inches long by 30 inches deep.

2.15.2. Aggregate for Junction Box Type A, B, or C

Aggregate for junction box type A, B, or C shall be gradation size no. 57 and conform to the *Standard Specifications for Road and Bridge Construction.*

2.15.3. Junction Box 10x8x4

Junction Box Type 10x8x4 shall be constructed of a UV-stabilized, nonmetallic material or non-rusting metal and be weatherproof in accordance with NEMA 4X. Box shall be equipped with an overhanging door with a continuous durable weatherproof gasket between the body and door. Door shall be hinged with stainless steel screws, hinge(s) and pin(s) and shall be equipped with a stainless steel padlockable latch on the side opposite the hinge(s). Junction Box 10x8x4 shall have minimum inside dimensions of 10 inches high by 8 inches wide by 4 inches deep.

2.16. Maintain and Control Traffic

Materials for the bid item Maintain and Control Traffic shall conform to the *Standard Specifications for Road and Bridge Construction,* and the KYTC Department of Highways *Standard Drawings.*

2.17. Piezoelectric Sensor

Piezoelectric sensor (piezo) shall provide a consistent level voltage output signal when a vehicle axle passes over it, shall have a shielded transmission cable attached, and shall meet the following requirements:

- Dimensions: such that sensor will fit in a ¾ inch wide by 1 inch deep saw cut. Total length shall be 6 feet unless specified otherwise.
- Output uniformity: ± 7% (maximum)
- Typical output level range: 250mV (minimum) from a wheel load of 400 lbs.
- Working temperature range: -40° to 160° F.
- Sensor life: 30 million Equivalent Single Axle Loadings (minimum)

Shielded transmission cable shall be coaxial and shall meet the following requirements:

- RG 58C/U with a high density polyethylene outer jacket rated for direct burial
- Length shall be a minimum of 100 feet. Installations may exceed 100 feet so the piezo shall be supplied with a lead-in of appropriate length so that the cable can be installed splice-free from the piezo to the cabinet.
- Soldered, water resistant connection to the sensor.

One installation bracket for every 6 inches of sensor length shall also be supplied. Piezo shall be a RoadTrax BL Class I or approved equal.

2.18. Saw Slot Sealant

Saw Slot Sealant shall be non-shrink, non-stringing, moisture cure, polyurethane

encapsulant suitable for use in both asphalt and concrete pavements. It shall provide a void-free encapsulation for detector loop cables and adequate compressive yield strength and flexibility to withstand heavy vehicular traffic and normal pavement movement.

The cured encapsulant shall meet or exceed the following:

- Hardness (Indentation): 35-65 Shore A, ASTM D2240
- Tensile Strength: 150 psi minimum, ASTM D412
- Elongation: 125% minimum 2 inch/minute pull, ASTM D412
- Tack-free Drying Time: 24 hours maximum, ASTM C679
- Complete Drying Time: 30 hours maximum, KM 64-447
- Chemical Interactions (seven day cure at room temperature, 24-hour immersion, KM 64-446):
    - Motor Oil: No effect
    - Deicing Chemicals: No effect
    - Gasoline: Slight swell
    - Hydraulic Brake Fluid: No effect
    - Calcium Chloride (5%): No effect

2.19. Seeding and Protection

Material for Seeding and Protection shall be Seed Mixture Type I and conform to the *Standard Specifications for Road and Bridge Construction*.

2.20. Signs

Materials for signs shall conform to the *Standard Specifications for Road and Bridge Construction.*

2.21. Splicing Materials

2.21.1. Electrical Tape

Electrical tape shall be a premium grade, UL-listed, all-weather, vinyl-insulating tape with a minimum thickness of 7 mil. Tape shall be flame retardant and resistant to abrasion, moisture, alkalis, acids, corrosion, and weather (including ultraviolet exposure).

2.21.2. Splice Kit

Splice kit shall be inline resin-type and rated for a minimum of 600V. Resin shall be electrical insulating-type and shall provide complete moisture and insulation resistance.

2.22. Steel Reinforcing Bar

Steel reinforcing bar shall be #5 and shall conform to the *Standard Specifications for Road and Bridge Construction.*

2.23. Terminal Block

Terminal block shall be rated for a minimum of 300 V and have a minimum of six

terminal pairs with 9/16-inch nominal spacing (center to center) for connecting loop and piezoelectric sensor wires to cable assemblies. Terminal block shall have screw type terminal strips to accommodate wire with spade-tongue ends.

2.24. Warning Tape

Warning tape shall be acid and alkali resistant formulated for direct burial. Tape shall be a minimum of 3 inches wide by 4.0 mils (nominal) thick, and shall be permanently imprinted with a minimum 1 inch black legend on a red background warning of an electric line. Tape shall meet or exceed the following industry specifications:

- American Gas Association (AGA) 72-D-56
- American Petroleum Institute (API) RP 1109
- American Public Works Association (APWA) Uniform Color Code
- Department of Transportation (DOT) Office of Pipeline Safety USAS B31.8
- Federal Gas Safety Regulations S 192-321 (e)
- General Services Administration (GSA) Public Buildings Service Guide: PBS 4-1501, Amendment 2
- National Transportation Safety Board (NTSB) PSS 73-1
- Occupational Safety and Health Administration (OSHA) 1926.956 (c) (1)

2.25. Wire and Cable

All cable and wire shall be plainly marked in accordance with the National Electrical Code (NEC).

2.25.1. Loop Wire

Loop wire shall be 14 AWG, stranded, copper, single conductor, and shall conform to the International Municipal Signal Association (IMSA) Specification No. 51-7.

2.25.2. Cable No. 14/1 Pair

Cable No. 14/1 pair loop lead-in cable shall be 14 AWG, stranded, copper paired, electrically shielded conductors, and shall conform to IMSA 19-2.

2.25.3. Grounding conductor

Grounding conductor and bonding jumper shall be solid or stranded, 4 AWG bare copper.

2.25.4. Service Entrance Conductor

Service entrance conductor shall be stranded, copper, Type USE-2, sized as required to comply with the NEC.

2.25.5. Terminal for electrical wire or cable

Terminal for electrical wires or cables shall be insulated, solderless, spade tongue terminals of correct wire and stud size. Terminal for electrical wires or cables shall be incidental to the wire or cable (including piezoelectric sensor transmission cable) to be connected to terminal strips.

2.26. Wood Post

Wood post shall be Southern Pine pretreated to conform to the American Wood Preservers' Association (AWPA) C-14 and shall have minimum dimensions of 4 inches by 4 inches by 8 feet long (for Galvanized Steel Cabinet) or 4 feet long (for Junction Box 10x8x4), sawed on all four sides with both ends square.

2.27. Wooden Pole

Wooden pole shall be a Class IV wood pole of the length specified and shall conform to the *Standard Specifications for Road and Bridge Construction* except the pole shall be treated in accordance with AWPA P9 Type A.

3. CONSTRUCTION METHODS

The plans indicate the extent and general arrangement of the installation and are for guidance. When the Contractor deems any modifications to the plans or specifications necessary, details of such changes and the reasons shall be submitted in writing to the engineer for written approval prior to beginning the modified work.

After the project has been let and awarded, the Division of Construction shall notify the Division of Planning of the scheduled date for a Pre-Construction meeting so that prior arrangements can be made to attend. This will allow the Division of Planning an opportunity to address any concerns and answer any questions that the Contractor may have before beginning the work.

The Division of Planning Equipment Management Team (502-564-7183) shall be notified a minimum of seven days before any work pertaining to these specifications begins to allow their personnel the option to be present during installation.

Unless otherwise specified, installed materials shall be new.

Construction involving the installation of loops or piezoelectric sensors shall not be performed when the temperature of the pavement is less than 38ºF.

A final inspection will be performed by a member of the Central Office Division of Planning equipment staff after the installation is complete to verify that the installation is in compliance with the plans and specifications.

Any required corrective work shall be performed per the *Standard Specifications for Road and Bridge Construction.*

3.1. Anchoring

Furnish: Anchor, anchor rod, guy wire, strand vise, guy guard.

Anchor shall be installed in relatively dry and solid soil. Rock anchor shall be installed in solid rock. Excavate the hole at a 45° to 60° angle in line with the guy (hole size shall be slightly larger than the expanded anchor – see manufacturer's recommendation). Attach rod to anchor, install assembly into hole, and expand anchor. Backfill and tamp entire disturbed area. The effectiveness of the anchor is dependent upon the thoroughness of backfill tamping. Attach guy to strand vise on pole and anchor rod and tighten to required tension. Install guy guard on guy.

3.2. Bore and Jack Pipe – 2"

Furnish: Steel Encasement Pipe, 2"

Bore and jack pipe – 2" shall conform to the Section 706 of the *Standard Specifications for Road and Bridge Construction*.

3.3. Cleanup and Restoration

Furnish: Seed Mix Type 1 (as required); fertilizer (as required); agricultural limestone (as required); mulch or hydromulch (as required); tackifier (as required).

The Contractor shall be responsible for repairing any damage to public and/or private property resulting from his work. Upon completion of the work, restore all disturbed highway features in like kind design and materials. This shall include filling any ruts and leveling ground appropriately. Contractor shall dispose of all waste and debris off the project. Sow all disturbed earthen areas with Seed Mix Type 1 per Section 212 of the *Standard Specifications for Road and Bridge Construction*. All materials and labor necessary for cleanup and restoration shall be considered incidental to other bid items.

3.4. Conduit

Furnish: Conduit; conduit fittings; bushings (grounding where required); LB condulets (as required); weatherheads (as required); conduit straps; hardware; conduit sealant.

Conduit that may be subject to regular pressure from traffic shall be laid to a minimum depth of 24 inches below grade. Conduit that will not be subject to regular pressure from traffic shall be laid to a minimum depth of 18 inches below grade.

Conduit ends shall be reamed to remove burrs and sharp edges. Cuts shall be square and true so that the ends will butt together for the full circumference of the conduit. Tighten couplings until the ends of the conduit are brought together. Do not leave exposed threads. Damaged portions of the galvanized surfaces and untreated threads resulting from field cuts shall be painted with an Engineer-approved, rust inhibitive paint. Conduit bends shall have a radius of no less than 12 times the nominal diameter of the conduit, unless otherwise shown on the plans.

Contractor shall install a bushing (grounding bushing where required) on both ends of all conduits. Cap spare conduits on both ends with caps or conduit sealant.

Conduit openings in junction boxes and cabinets shall be waterproofed with a flexible, removable conduit sealant, working it around the wires, and extending it a minimum 1 inch into the end of the conduit.

After the conduit has been installed and prior to backfilling, the conduit installation shall be inspected and approved by the Engineer.

3.5. Electrical Service

Furnish: Meter base, service disconnect, wire, GFCI AC duplex receptacle with box and cover; conduit, conduit fittings, bushings (grounding where required); LB condulets (as required); weatherhead; conduit straps; hardware; conduit sealant; ground rod with clamp; grounding conductor.

Prior to any construction, the Contractor shall initiate a work order with the local power

company for the installation of electrical service to the site. A representative from the Division of Planning and the local power company shall be consulted prior to choosing an exact location for the pole. The Contractor shall clear the right-of-way for the electrical service drop.

Contractor shall obtain electrical inspections, memberships, meter base, service disconnect and any other requirements by the utility serving the installation and pay all fees as required.

Install meter-base and disconnect panel with a 30-ampere, fused, circuit breaker inside. Install a manufactured weatherproof hub connectors to connect the conduit to the top of the meter base and service disconnect.

Install a rigid ¾ inch conduit with three 8 AWG service conductors from the cabinet, through the service disconnect to the meter base and a 1¼" conduit with three 8 AWG service conductors from the meter base to a weatherhead two feet from the top of the electrical service pole. Install conduit straps 30 inches on center and provide a drip loop where the wire enters the weatherhead. Splice electric drop with service entrance conductors at the top of the pole.

The limit of conduit incidental to "Install Electrical Service" for a pad mounted cabinet is 24 inches beyond face of service pole.

Install a 120-volt, 20-amp GFCI AC duplex receptacle with box and cover in the automatic data recorder (ADR) cabinet.

Install a ground rod with clamp. Install a grounding conductor wire from the meter base, through the disconnect panel, to the ground rod clamp. Install grounding conductor in 1-¾" conduit from service disconnect to ground rod.

After completing the installation and before the electrical service is connected, obtain a certificate of compliance from the Kentucky Department of Housing, Buildings and Construction, Electrical Inspection Division.

3.6. Flashing Arrow

Furnish: Arrow Panel

Construction of Flashing Arrow shall conform to the *Standard Specifications for Road and Bridge Construction.*

3.7. Galvanized Steel Cabinet

Furnish: Cabinet; wood posts; concrete; conduit fittings; metal framing channel; pipe clamp; terminal block(s); spade tongue wire terminals; wire labels; hardware.

Where right-of-way allows, locate the cabinet such that it is outside the clear zone in accordance with the *Roadside Design Guide*. Install Cabinet such that the door of the

cabinet faces the roadway.

Excavate as required and install wood posts to a depth of 36 inches and place concrete around posts as shown on the standard detail sheets. Install metal framing channel with pipe clamp between posts.

Install Cabinet on wood posts 38 inches above the finished grade as shown on the standard detail sheets. Install a unistrut between posts when two posts are specified.

Install the required number of terminal blocks on the cabinet back plate. Install a spade tongue terminal on each loop and piezo sensor wire entering the cabinet and connect wires to terminal block(s). Wiring shall be neat and orderly. Label all wires and cables inside cabinet.

Install conduit from ground to cabinet and attach to pipe clamp. Install locknuts to attach conduit to cabinet and install a conduit bushing as shown on the standard detail sheets.

3.8. Grounding

Furnish: Ground rod with clamp; grounding conductor.

At sites with electrical or solar service, all conduits, poles, and cabinets shall be bonded to ground rods and the electrical system ground to form a complete grounded system.

Install such that top of ground rod is a minimum of 3 inches below finished grade.

Grounding systems shall have a maximum 25 ohms resistance to ground. If the resistance to ground is greater than 25 ohms, two or more ground rods connected in parallel shall be installed. Adjacent ground rods shall be separated by a minimum of 6 feet.

3.9. Install Pad Mount Enclosure

Furnish: Concrete; anchor bolts with washers and nuts; conduit; conduit fittings; conduit grounding bushings; ground rod with clamp; grounding conductor; conduit sealant; wooden stakes (where required); wire labels; hardware.

The Contractor shall be responsible for securing the enclosure from the Central Office Division of Planning Warehouse in Frankfort and transporting it to the installation site.

Where right-of-way allows, locate the enclosure such that it is outside the clear zone in accordance with the *Roadside Design Guide*.

Excavate as required, and place concrete to construct the enclosure foundation as specified on the standard detail sheets. Install enclosure on the concrete base such that the door(s) of the enclosure opens away from traffic (hinges away from traffic). Install anchor bolts, washers, and nuts to secure the enclosure to the foundation.

Install ground rod with clamp and install one ¾ inch rigid conduit from enclosure base to

ground rod. Install a grounding conductor from ground rod to enclosure base and bond to each conduit bushing in the base.

Install one ¾ inch rigid steel conduit for electrical service from the base of the enclosure to 24 inches beyond the concrete base. Make all field wiring connections to the electrical service, as applicable.

If electrical service is not provided as a bid item in the contract, plug conduit on both ends with a cap, conduit sealant, or electrical tape. Mark the location of the buried conduit end with a wooden stake labeled "3/4 in. conduit."

Install specified rigid steel conduit(s) into the base of the enclosure for sensor wire entry. Install one spare 2 inch conduit from the enclosure base to 2 feet beyond the concrete base. Plug spare conduit on both ends with a cap, conduit sealant or electrical tape.

The limit of all conduits incidental to "Install Pad Mount Enclosure" is 24 inches beyond the edge of the concrete base.

Wiring in enclosure shall be neat and orderly. Label all wires and cables inside enclosure. KYTC personnel will furnish and install terminal blocks and connect sensors to terminal blocks.

3.10. Install Controller Cabinet

Furnish: Mounting brackets; mounting straps; conduit; LB condulets; conduit fittings; conduit grounding bushings; ground rod with clamp; grounding conductor; cable staples; conduit sealant; wooden stakes (where required); wire labels; hardware.

The Contractor shall be responsible for securing the cabinet from the Central Office Division of Planning Warehouse in Frankfort and transporting it to the installation site. Any existing holes in the cabinet not to be reused shall be covered or plugged to meet NEC requirements.

Install mounting brackets and secure cabinet to pole with mounting straps.

Install a ground rod with clamp. Install grounding conductor in 1-¾" conduit form cabinet to ground rod.

Install one ¾ inch rigid steel conduit with two lb condulets from cabinet to electrical service disconnect box. Make all field wiring connections to the electrical service, as applicable.

If electrical service is not provided as a bid item in the contract, plug conduit on both ends with cap, plumbers putty, conduit sealant, or electrical tape. Mark the location of the buried conduit end with a wooden stake labeled "3/4 in. conduit".

Install specified rigid steel conduit(s) and type LB condulet(s) into the bottom of the

cabinet for sensor wire entry. The limit of conduits incidental to "Install Controller Cabinet" is 24 inches beyond the face of the pole.

Wiring in cabinet shall be neat and orderly. Label all wires and cables inside cabinet. KYTC personnel will furnish and install terminal blocks and connect sensors to terminal blocks.

3.11. Junction Box Type 10x8x4

Furnish: Junction box; wood post; conduit fittings; wire labels; hardware.

Where right-of-way allows, locate the junction box such that it is outside the clear zone in accordance with the Roadside Design Guide.

Excavate as required and install wood post(s) to a depth of 18 inches. Install junction box on wood post such that the bottom of the box is 18 inches above the finished grade as shown on the standard detail sheets. Box shall be installed with four (4) 2½ inch wood screws and washers.

Install locknuts to attach conduit to junction box and install a conduit bushing as shown on the standard detail sheets.

Wiring inside box shall be neat and orderly. Label all wires and cables inside box.

3.12. Junction Box Type A, B, or C

Furnish: Junction box, No. 57 aggregate; grounding conductor

Excavate as required and place approximately 12 inches of No. 57 aggregate beneath the proposed junction box to allow for drainage. Install specified junction box type A, B, or C near the edge of pavement, flush with finished grade per the detail sheets. Where required, orient the box so that the dimensions comply with the National Electrical Code. Stub conduits with grounding bushings into junction box at its base to accommodate wires and connect grounding conductor to all grounding bushings. Backfill to existing grade, and restore disturbed area to the satisfaction of the Engineer.

Wiring inside box shall be neat and orderly. Label all wires and cables inside box.

3.13. Loops - Proposed

Furnish: Wire; saw slot sealant; backer rod; grout; conduit sealant.

The plans and notes specify the approximate location for loop installations. Prior to sawing slots or drilling cores, the Contractor shall meet with a representative of the Division of Planning to verify the precise layout locations on site. Avoid expansion joints and pavement sections where potholes, cracks, or other roadway flaws exist.

Upon completion of this meeting, the Contractor shall measure out and mark the proposed loop locations with spray paint or chalk such that the saw slots will be parallel

and perpendicular to the direction of traffic. Marked lines shall be straight and exact to the locations determined and sized as shown on the plans. Unless indicated otherwise, loops shall be 6 feet by 6 feet square and loops in the same lane shall be spaced 16 feet from leading edge to leading edge.

On resurfacing, rehabilitation, and new construction projects that include new asphalt pavement, the Contractor shall install loops prior to laying the final surface course. On projects with milling and texturing, the Contractor may install the loops prior to or after the milling operation; however, if installed prior to milling, the Contractor shall be responsible for ensuring that the loops are installed at a depth such that the milling operation will not disturb the newly installed loops. The Contractor shall correct damage caused by the milling operations to newly installed loops prior to placement of the final surface course at no additional cost to the Cabinet.

For projects that include the installation of new asphalt and piezoelectric sensors, the Contractor shall mark or otherwise reference all loops installed prior to the final surface course such that the loops can be accurately located when the piezoelectric sensors are installed after placement of the final surface course.

For projects that do not have asphalt surfacing, the Contractor shall install the loops in the surface of the pavement.

The Prime Contractor shall coordinate the installation of loops with the electrical sub-Contractor and the Engineer to ensure correct operation of the completed installation.

The following is a typical step by step procedure for the installation of a loop.

- Carefully mark the slot to be cut, perpendicular to the flow of traffic and centered in the lane.
- Make each saw-cut 3/8-inch wide and at a depth such that the top of the backer rod is a minimum of 2 inches below the surface of rigid (PCC/Concrete) pavement or 4 inches below the surface of asphalt pavement.
- Drill a 1½ inch core hole at each corner and use a chisel to smooth corners to prevent sharp bends in the wire.
- Clean ALL foreign and loose matter out of the slots and drilled cores and within 1 foot on all sides of the slots using a high pressure washer.
- Completely dry the slots and drilled cores and within 1 foot on all sides of the slots using oil-free forced air, torpedo heaters, electric heaters, or natural evaporation, depending on weather conditions. Be very careful not to burn the asphalt if heat is used.
- Measure 9-12 inches from the edge of the paved surface (shoulder break or face of curb) and drill a 1½ inch hole on a 45º angle to the conduit adjacent to the roadway.
- Closely inspect all cuts, cores, and slots for jagged edges or protrusions prior to the placement of the wire. All jagged edges and protrusions shall be ground or re-cut and cleaned again.

- Place the loop wire splice-free from the termination point (cabinet or junction box) to the loop, continue around the loop for four turns, and return to the termination point.
- Push the wire into the saw slot with a blunt object such as a wooden stick. Make sure that the loop wire is pushed fully to the bottom of the saw slot.
- Install conduit sealant to a minimum of 1" deep into the cored 1½ inch hole.
- Apply loop sealant from the bottom up and fully encapsulate the loop wires in the saw slot. The wire should not be able to move when the sealant has set.
- Cover the encapsulated loop wire with a continuous layer of backer rod along the entire loop and home run saw slots such that no voids are present between the loop sealant and backer rod.
- Finish filling the saw cut with non-shrinkable grout per manufacturer's instructions. Alleviate all air pockets and refill low spaces. There shall be no concave portion to the grout in the saw slot. Any excess grout shall be cleaned from the roadway to alleviate tracking.
- Clean up the site and dispose of all waste off the project.
- Ensure that the grout has completely cured prior to subjecting the loop to traffic. Curing time varies with temperature and humidity.

Exceptions to installing loop wire splice-free to the junction box or cabinet may be considered on a case-by-case basis and must be pre-approved by the Engineer. If splices are allowed, they shall be located in a junction box and shall conform to the construction note for Splicing.

If loop lead-in cable (Cable No. 14/1 Pair) is specified, cable shall be installed splice free to the cabinet ensuring that extra cable is left in each junction box or cabinet. All wires and cables shall be labeled in each junction box and cabinet.

Loop inductance readings shall be between 100 and 300 microhenries. The difference of the loop inductance between two loops in the same lane shall be ±20 microhenries. Inductance loop conductors shall test free of shorts and grounds. Upon completion of the project, all loops must pass an insulation resistance test of at least 100 million ohms to ground when tested with a 500 Volt direct current potential in a reasonably dry atmosphere between conductors and ground.

3.14. Loops – Existing

When noted on a data collection station layout sheet that there are existing inductive loops within the limits of the project, notify the Engineer in writing, a minimum of 14 calendar days prior to beginning milling operations. After milling and prior to placing asphalt inlay, conduct an operating test on the existing inductance loops at the control cabinet in the presence of the Engineer to determine if the inductance loop conductors have an insulating resistance of a minimum of 100 megohms when tested with a 500 volt direct current potential in a reasonably dry atmosphere between conductors and ground. The Department may also conduct its own tests with its own equipment.

If the tests indicate the loop resistances are above the specified limit and the Engineer determines the system is operable, proceed with the asphalt inlay. If the test indicates the loop resistance is not within the specified limits or if the Engineer determines the system is otherwise not operable, prior to placing the asphalt inlay install and test new loop detectors according to the station layout, notes, and Detail Drawings.

The Engineer will contact and maintain liaison with the District Planning Engineer and the Division of Planning in order to coordinate any necessary work.

3.15. Maintain and Control Traffic

Furnish (all as required): Drums, traffic cones, barricades used for channelization purposes, delineators, and object markers.

Maintain and Control Traffic shall conform to the plans, the Standard Specifications for Road and Bridge Construction, and the KYTC Department of Highways Standard Drawings.

3.16. Open Cut Roadway

Furnish: Concrete, reinforcing bars.

Excavate trench by sawing and chipping away roadway to dimensions as indicated on the detail sheets. After placing conduit, install concrete and steel reinforcing bars per the *Standard Specifications for Road and Bridge Construction*. Restore any disturbed sidewalk to its original condition.

3.17. Piezoelectric Sensor

Furnish: Piezoelectric sensor and cable; sensor support brackets; saw slot sealant; backer rod; grout; conduit sealant.

The plans and notes specify the approximate location for piezoelectric sensor (piezo) installations. Prior to sawing slots or drilling cores, the Contractor shall meet with a representative of the Division of Planning to verify the final layout on site. Avoid expansion joints and pavement sections where potholes, cracks, or other roadway flaws exist. Roadway ruts at the proposed piezo location shall not be in excess of ½ inch under a 4-foot straight edge.

Install the piezo perpendicular to traffic in the final surface course of the pavement. Locate the sensor in the lane as shown on the site layout drawing. Eleven-foot length sensors shall be centered in the lane.

The following is a typical step by step procedure for the installation of a piezo. Refer specifically to the manufacturer's instructions provided with the sensor prior to installation.

- Carefully mark the slot to be cut, perpendicular to the flow of traffic and properly positioned in the lane.

- It is strongly recommended that a ¾ inch wide diamond blade be used for cutting the slot, or that blades be ganged together to provide a single ¾ inch wide cut. The slot shall be wet cut to minimize damage to the pavement.
- Cut a slot ¾ inch wide (±1/16 inch) by 1 inch minimum deep. The slot should be a minimum of 2 inches longer than the sensor (including the lead attachment). Drop the saw blade an extra ½ inch down on both ends of the sensor. The lead out of the passive cable should be centered on the slot.
- Cut the slot for the passive cable ¼ inch wide and at a depth so that the top of the backer rod is a minimum of 2 inches below the road surface.
- Clean ALL foreign and loose matter out of the slot and within 1 foot on all sides of the slot using a high pressure washer.
- Completely dry the slot and within 1 foot on all sides of the slot using oil-free forced air, torpedo heaters, electric heaters, or natural evaporation, depending on weather conditions. Be very careful not to burn the asphalt if heat is used.
- Measure 9-12 inches from the edge of the paved surface (shoulder break or face of curb) and drill a 1½ inch hole on a 45º angle to the conduit adjacent to the roadway.
- Place strips of 2-4 inch wide tape strips on the pavement along the lengths of both sides of the sensor slot, 1/8 inch away from the slot.
- Wear clean, protective latex (or equivalent) gloves at all times when handling sensors. Visually inspect sensor to ensure it is straight. Check lead attachment and passive cable for cuts, gaps, cracks and/or bare wire. Verify that the correct sensor type and length is being installed by checking the data sheet. Verify there is sufficient cable to reach the cabinet. Piezo lead-in cable shall not be spliced.
- Test the sensor for capacitance, dissipation factor and resistance, according to the directions enclosed with the sensor. Capacitance and dissipation should be within ±20% of the piezo data sheet. Resistance (using the 20M setting) should be infinite. Record the sensor serial number and the test results and label "pre-installation." This information should be stored in the counter cabinet and/or returned to Department Planning personnel.
- Lay the sensor next to the slot and ensure that it is straight and flat.
- Clean the sensor with steel wool or an emery pad and wipe with alcohol and a clean, lint-free cloth.
- Place the installation bracket clips every 6 inches along the length of the sensor.
- Bend the tip of the sensor downward at a 30° angle. Bend the lead attachment end down at a 15° angle and then 15° back up until level (forming a lazy Z).
- Place the sensor in the slot, with the brass element 3/8 inch below the road surface along the entire length. The tip of the sensor should be a minimum of 2 inches from the end of the slot and should not touch the bottom of the slot. The top of the plastic installation bracket clips should be 1/8 inch below the surface of the road. The lead attachment should not touch the bottom or sides of the slot. Ensure the sensor ends are pushed down per the manufacturer's instructions.
- Visually inspect the length of the sensor to ensure it is at uniform depth along its length and it is level (not twisted, canted or bent).

- On the passive cable end, block the end of the slot approximately 3-5 inches beyond the end of the lead attachment area creating an adequate "dam" so that the sensor grout does not flow out.
- Use one bucket of sensor grout per piezo installation. Overfill the slot with sensor grout and allow to cure for a minimum of 10 minutes before continuing with the installation. Ensure that sensor grout fills around and beneath the sensor completely and that there is not a trough on top.
- Remove the tape along the sides of the saw slot when the adhesive starts to cure.
- Carefully remove the dam from the end of the sensor.
- Route the lead-in cable through the saw slot
- Install conduit sealant to a minimum of 1" deep into the cored 1½ inch hole.
- Cover the lead-in cable with encapsulant, backer rod, and grout.
- If necessary, after the grout has hardened, grind with an angle grinder until the profile is a 1/16 inch mound. There shall be no concave portion to the mound.
- Clean up the site and dispose of all waste off the project.
- Ensure that the sensor grout has completely cured prior to subjecting the sensor to traffic. Curing time will vary with temperature and humidity.

Upon installation, test the sensor for capacitance, dissipation factor and resistance, according to the directions enclosed with the sensor. Capacitance and dissipation should be within +20% of the piezo data sheet. Resistance (using the 20M setting) should be infinite. Perform a functional test of the piezo with an oscilloscope to ensure that the sensor is generating a proper response to the passage of vehicles.

Record the sensor serial number and the test results and label "post-installation." This information should be stored in the counter cabinet and/or returned to Department Planning personnel.

3.18. Pole – Wooden

Furnish: Pole; anchoring equipment (as required); hardware (as required).

Excavate and install wood pole to a minimum depth of one-sixth the total pole height. Place backfill material in hole and compact until flush with existing grade. Install guy wire, guy guard, anchor, anchor rod, and strand vise, if necessary. Anchor shall be a minimum of one-third the pole height from the face of the pole. Provide temporary erosion control, seeding, protection and restoration of disturbed areas to the satisfaction of the Engineer.

3.19. Removal of Existing Equipment

The Contractor shall remove existing materials (including but not limited to: poles, anchors, cabinets, junction boxes, conduit and wire) not to be reused. Contractor shall dispose of all removed materials off the project. All materials and labor necessary for the removal of existing equipment shall be considered incidental to other bid items.

3.20. Signs

Furnish: Signs; sign standards; hardware.

Construction of **s**igns shall conform to the *Standard Specifications for Road and Bridge Construction.*

3.21. Splicing

Furnish: Splice kit; solder.

These notes describe the splicing process (if permitted) and are not intended to grant permission to splice. Permission to splice shall be determined by the Division of Planning and the locations shall be shown on the layout sheet. If splicing is needed but not shown on the layout sheet, the Contractor shall receive prior written approval from the Division of Planning.

All splices shall conform to the provisions of the NEC.

Splices for loop and loop lead-in wire shall be twisted and soldered. Abrade the outer jacket of both wires to promote good adhesion and prevent capillary leak paths. Seal the splice with an electrical sealing resin. Spliced loop conductors shall test free of shorts and unauthorized grounds and shall have an insulating resistance of at least 100 megohms when tested with a 500 volt direct current potential in a reasonably dry atmosphere between conductors and ground.

For piezos, the same type coax cable, supplied by the manufacturer, shall be used to splice to the sensor's lead-in cable. Cables shall be soldered. Abrade the outer jacket of both cables to promote good adhesion and prevent capillary leak paths. Seal the splice with an electrical sealing resin. Spliced piezo cables shall be tested and have a minimum resistance of 20 megohms, a maximum dissipation factor of 0.03, a capacitance within the manufacturer's recommended range based upon the length of additional cable. A functional test of the piezo shall be performed to ensure that the sensor is generating a proper response to the passage of vehicles.

3.22. Trenching and Backfilling

Furnish: Warning tape; seed mix type I; cereal rye or German foxtail-millet; mulch; concrete (as required); asphalt (as required).

Excavate trench and provide required cover as shown on the standard detail sheets. After placing conduit, backfill material shall be placed and compacted in lifts of 9 inches or less. Install warning tape as shown on the detail sheet. Provide temporary erosion control, seeding, protection and restoration of disturbed areas to the satisfaction of the Engineer. This item shall include concrete, asphalt or approved replacement material for sidewalks, curbs, roadways, etc. (if required).

3.23. Wiring

Furnish: Wire; wire labels; spade tongue wire terminals (as required).

Installation of all wiring shall conform to the NEC. Permanent identification numbers shall be affixed to all wires in all junction boxes and cabinets (see Layout(s) for loop and piezo numbers).

Additional lengths of each loop and piezo sensor wire shall be neatly coiled in all cabinets and junction boxes as follows:

Enclosure Type	Additional length of each wire
Galvanized Steel Cabinet	2’
Pad Mount Cabinet (332)	8’
Pole Mount Cabinet (336)	4’
Junction Box Type 10x8x4	2’
Junction Box Type A, B, or C	2’

3.24. Wood Post

Furnish: Wood post; concrete (as required); seed mix type I; cereal rye or German foxtail-millet; mulch.

Excavate hole to specified depth and place concrete, if required. Install post, backfill to existing grade, and tamp backfill. Provide temporary erosion control, seeding, protection and restoration of disturbed areas to the satisfaction of the Engineer.

4. BID ITEM NOTES AND METHOD OF MEASUREMENT FOR PAYMENT

Only the bid items listed will be measured for payment. All other items required to complete the vehicle detection installation shall be incidental to other items of work. Payment at the contract unit price shall be full compensation for all materials, labor, equipment and incidentals to furnish and install these items.

4.1. Bore and Jack Pipe – 2”

Bore and jack pipe – 2” shall be furnished, installed, and measured for payment per the *Standard Specifications for Road and Bridge Construction*.

4.2. Conduit

Conduit shall include furnishing and installing specified conduit in accordance with the specifications. This item shall include conduit fittings, bodies, boxes, weatherheads, expansion joints, couplings, caps, conduit sealant, electrical tape, clamps, bonding straps and any other necessary hardware. Conduit will be measured in linear feet.

4.3. Electrical Service

Electrical Service shall include furnishing and installing all necessary materials and payment of all fees toward the complete installation of an electrical service which has passed all required inspections. Incidental to this item shall be furnishing and installing:

- Meter-base per utility company’s specifications
- Service disconnect panel per utility company’s specifications
- Meter base and service disconnect entrance hubs, waterproof
- Service entrance conductors
- Rigid steel conduit
- Rigid steel conduit fittings
- Conduit straps
- Weatherhead
- Duplex GFCI receptacle, 120-volt, 20-amp
- Ground rod with clamp
- Grounding conductor

Also incidental to this item shall be any necessary clearing of right of way for the electrical service drop.

Electrical service will be measured in individual units each.

4.4. Flashing Arrow

Flashing Arrow shall be furnished, installed, and measured for payment per the *Standard Specifications for Road and Bridge Construction.*

4.5. Galvanized Steel Cabinet

Galvanized Steel Cabinet shall include furnishing and installing galvanized steel cabinet on post as specified. Incidental to this item shall be furnishing and installing grounding hardware, and any necessary post/pole mounting hardware. Also incidental to this item shall be furnishing and installing the required number of terminal blocks and connection of all

sensors to the terminal blocks. Galvanized Steel Cabinet will be measured in individual units each.

4.6. Install Pad Mount Enclosure

Install Pad Mount Enclosure shall include installing a Department-furnished enclosure as specified on the detail sheets.

This item shall include obtaining the enclosure from KYTC and transporting it to the installation site and furnishing and installing the following:

- Concrete foundation (including any excavation necessary)
- Anchor bolts, lock washers, and nuts
- Conduit
- Conduit fittings (including grounding bushings)
- Weatherhead
- Terminal Strip(s)
- Ground rod with clamp
- Grounding conductor

Install Pad Mount Enclosure will be measured in individual units each.

4.7. Install Controller Cabinet

Install Controller Cabinet shall include installing a Department-furnished cabinet as specified on the detail sheets.

This item shall include obtaining the cabinet from KYTC and transporting it to the installation site and furnishing and installing the following:

- Conduit
- Conduit Fittings
- Terminal Strip(s)
- Ground rod with clamp
- Grounding conductor

Install Controller Cabinet will be measured in individual units each.

4.8. Junction Box Type 10" x 8" x 4"

Junction Box Type 10”x8”x4” shall include furnishing and installing specified junction box in accordance with the specifications. This item shall include connectors, splice sleeves, conduit fittings, mounting materials and any other items required to complete the installation. Incidental to this item shall be furnishing and installing specified post (wood, channel, metal, etc.) as required for the installation. Junction Box Type 10”x8”x4” will be measured in individual units each.

4.9. Junction Box Type A, B, or C

Junction Box Type A, B, or C shall include furnishing and installing specified junction box in accordance with the specifications. This item shall include excavation, furnishing and installing #57 aggregate, backfilling around the box, and restoration of disturbed areas to the satisfaction of the Engineer. Incidental to this item shall be furnishing and installing a

grounding conductor bonding all conduit grounding bushings in the box. Junction Box Type A, B, or C will be measured in individual units each.

4.10. Loop Saw Slot and Fill

Loop Saw Slot and Fill shall include sawing and cleaning saw slots and furnishing and installing conduit sealant, loop sealant, backer rod, grout, or other specified material. Loop Saw Slot and Fill will be measured in linear feet of sawed slot.

4.11. Maintain and Control Traffic

Maintain and Control Traffic shall be measured for payment per the *Standard Specifications for Road and Bridge Construction.*

4.12. Open Cut Roadway

Open Cut Roadway shall include excavating trench (sawing and chipping roadway) to dimensions as indicated on the detail sheets and furnishing and placing concrete, steel reinforcing bars, and asphalt. This item also includes restoring any disturbed sidewalk to its original condition. Open Cut Roadway will be measured in linear feet.

4.13. Piezoelectric Sensor

Piezoelectric sensor (piezo) shall include sawing and cleaning saw slots and furnishing and installing piezo in accordance with the specifications. This item shall include furnishing and installing lead-in wire, conduit sealant, encapsulation material, backer rod, grout, testing, and accessories. Piezo will be measured in individual units each.

4.14. Pole – 35’ Wooden

Pole – 35’ Wooden shall include excavation, furnishing and installing specified wood pole, backfilling and restoring disturbed areas to the satisfaction of the Engineer. Incidental to this item shall be furnishing and installing guy wire, anchor and anchor rod, strand vise, and guy guard, if specified.

Pole – 35’ Wooden will be measured in individual units each.

4.15. Signs

Signs shall be furnished, installed, and measured for payment per the *Standard Specifications for Road and Bridge Construction.*

4.16. Trenching and Backfilling

Trenching and Backfilling shall include excavation, warning tape, backfilling, temporary erosion control, seeding, protection and restoration of disturbed areas to original condition. This item shall include concrete, asphalt or approved replacement material for sidewalks, curbs, roadways, etc. (if required). Trenching and backfilling will be measured in linear feet.

4.17. Wire or Cable

Wire or cable shall include furnishing and installing specified wire or cable within saw slot, conduit, junction box, cabinet, or overhead as indicated on the detail sheets. Incidental to this item shall be the labeling of all wires and cables in each junction box, cabinet and splice

box, and furnishing and installing other hardware required for installing cable. Wire or Cable will be measured in linear feet.

4.18. Wood Post

Wood Post shall include furnishing and installing wood post as specified. This item shall include excavation, furnishing and placing concrete (if required), backfilling around the post, and restoration of disturbed areas to the satisfaction of the engineer. Wood Post will be measured in individual units each.

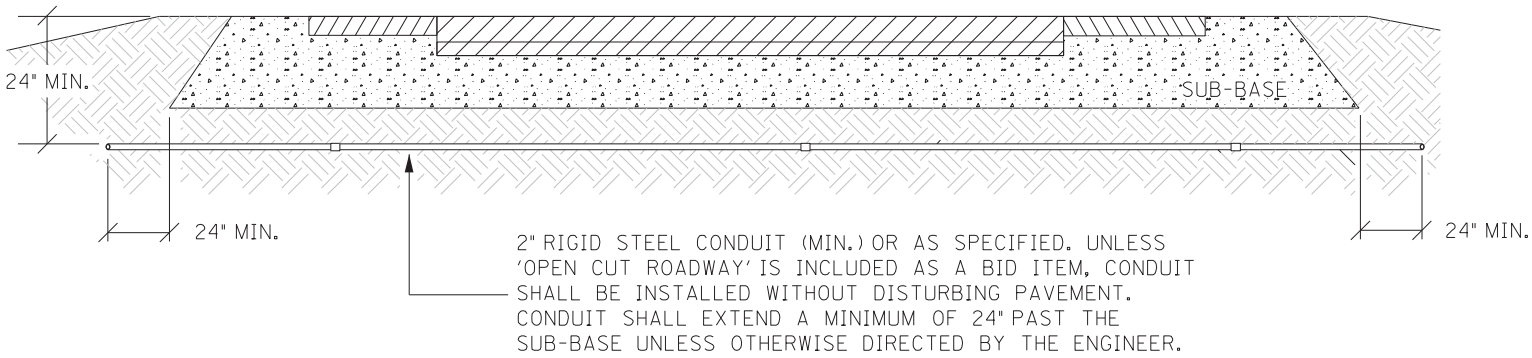

CONDUIT UNDER PAVEMENT

TOTAL TRENCH WIDTH SHALL BE 3" (NOM.) WIDER THAN THE SUM OF THE OUTSIDE DIAMETER(S) OF THE CONDUIT(S) INSTALLED. CONDUIT(S) SHALL BE CENTERED IN TRENCH.

CONTRACTOR SHALL PLACE BACKFILL IN LIFTS (9" MAX.) COMPACT BACKFILL, AND RESTORE DISTURBED AREA TO THE SATISFACTION OF THE ENGINEER

CONTRACTOR SHALL INSTALL UNDERGROUND UTILITY WARNING TAPE ABOVE CONDUIT AS SHOWN.

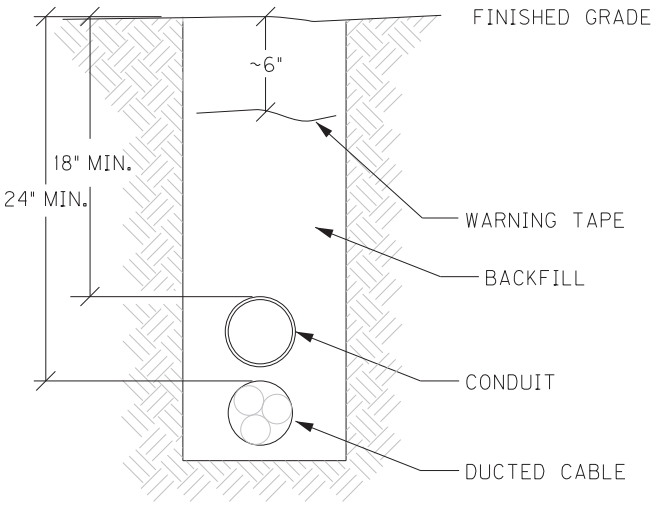

CONDUIT TRENCH

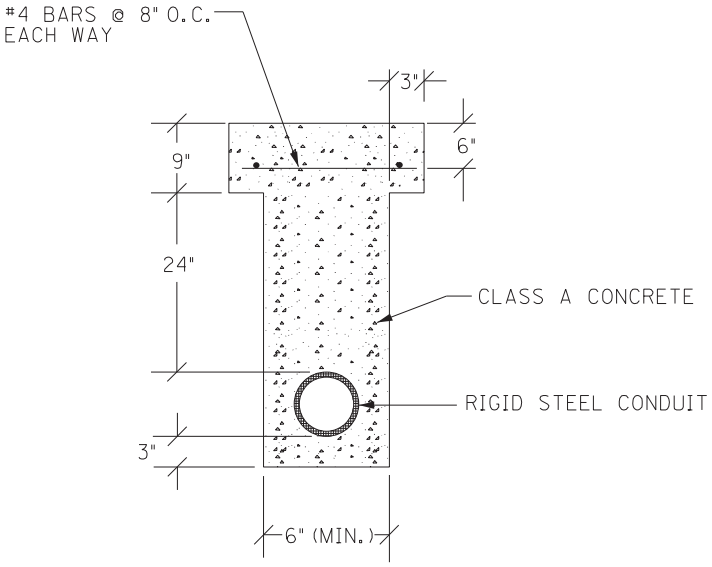

OPEN CUT PAVEMENT DETAIL

CONDUIT INSTALLATION

NOT TO SCALE

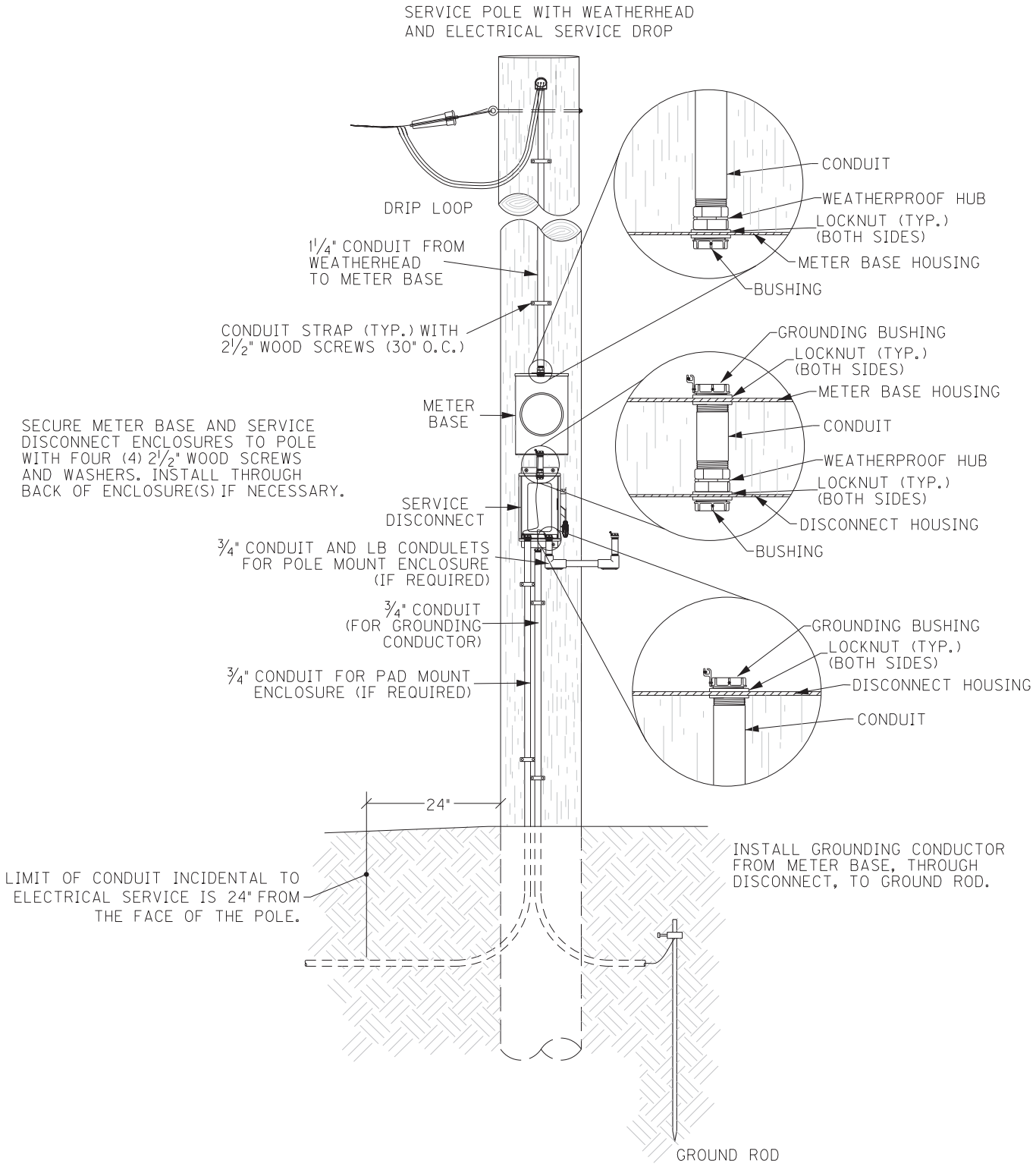

ELECTRICAL SERVICE

NOT TO SCALE

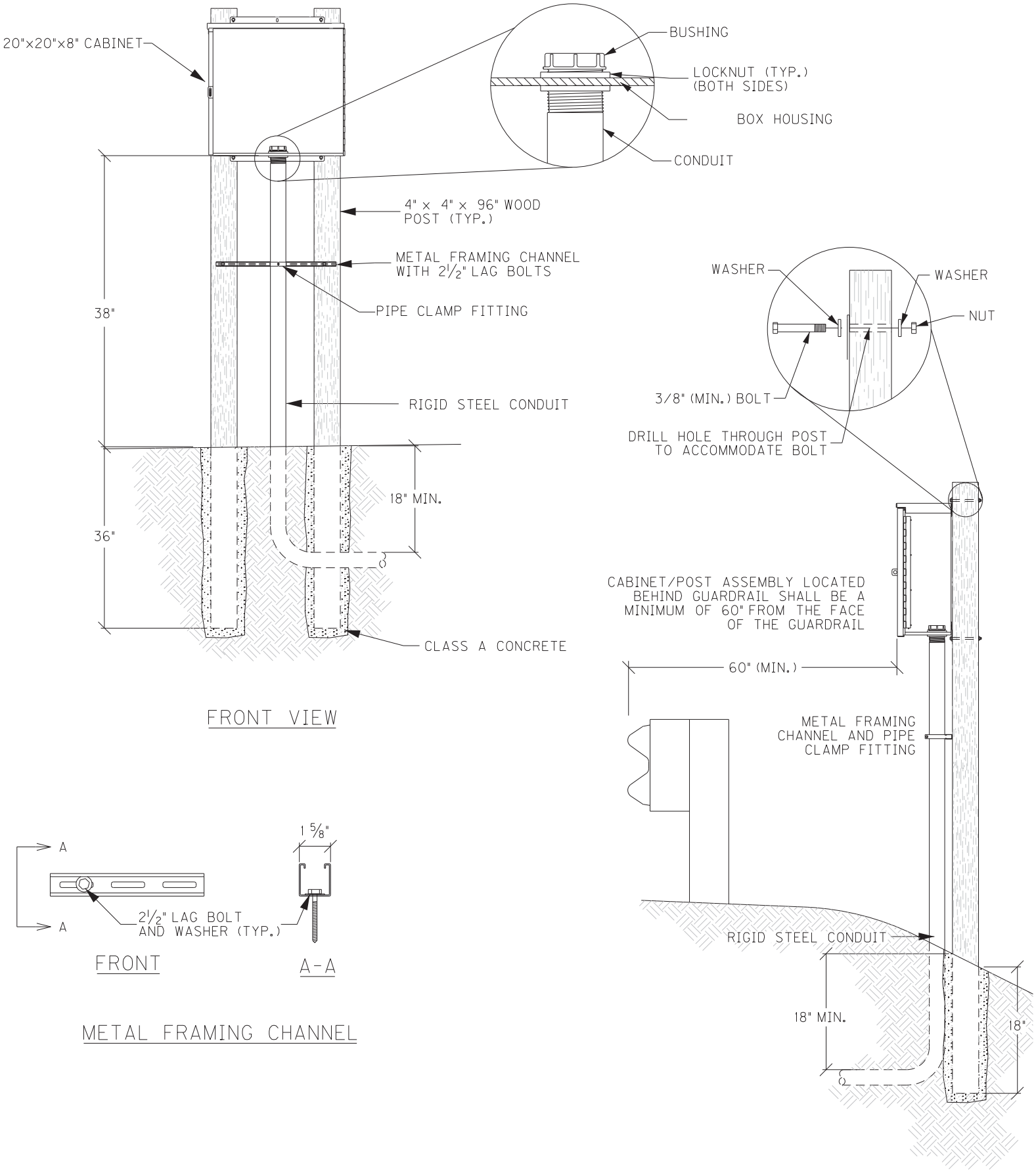

GALVANIZED STEEL CABINET DOUBLE POST ASSEMBLY

NOT TO SCALE

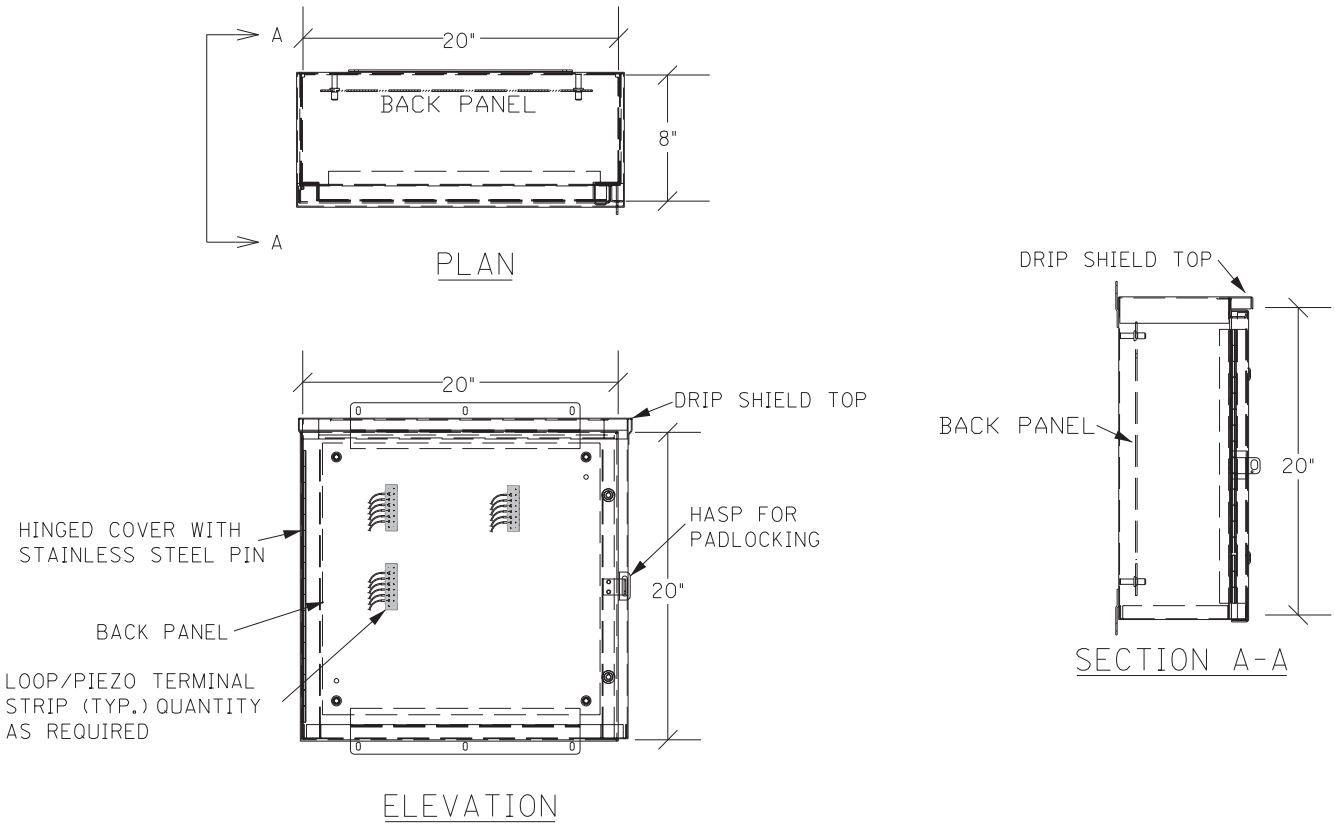

GALVANIZED STEEL CABINET

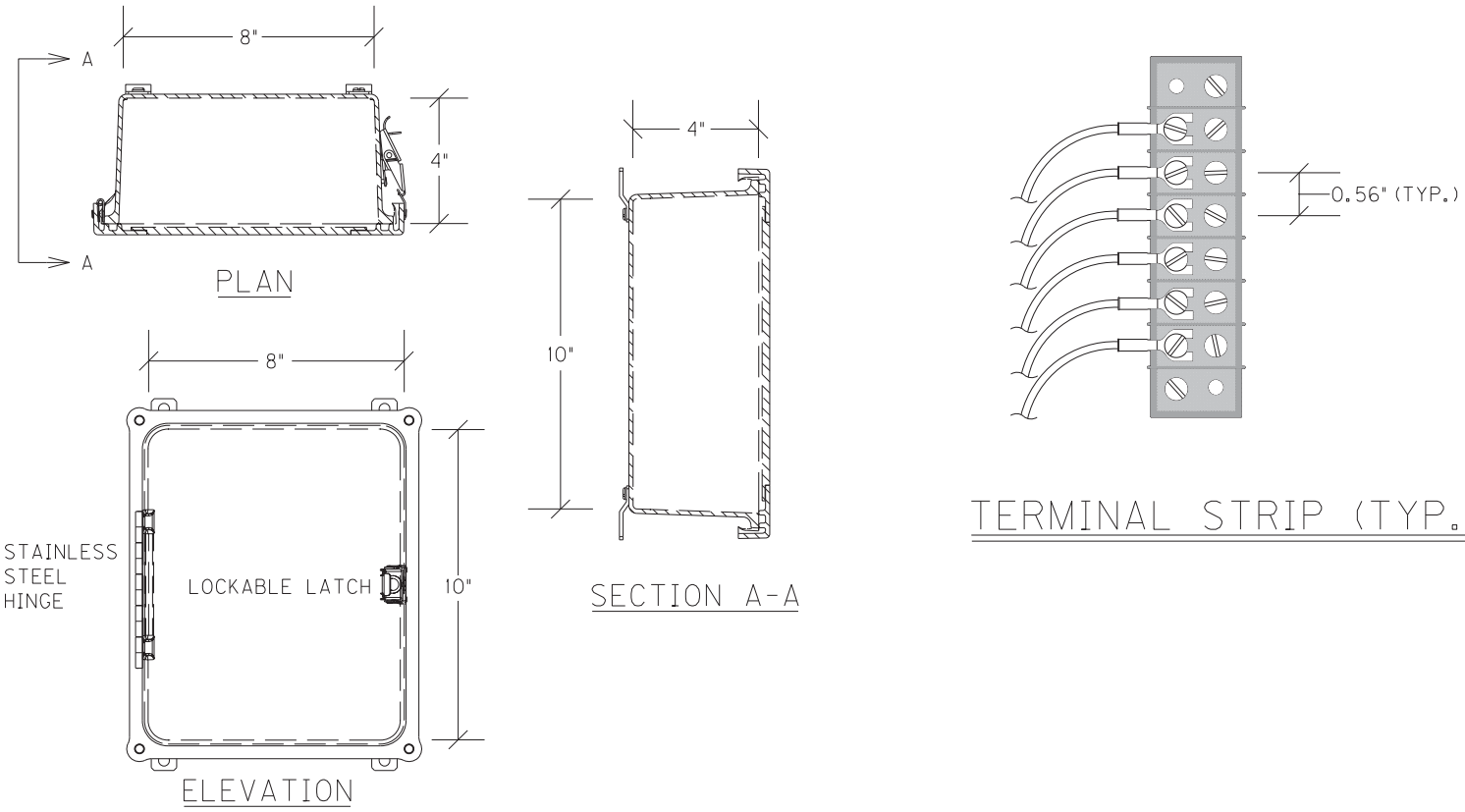

TERMINAL STRIP (TYP.)

JUNCTION BOX 10"x8"X4"

NOT TO SCALE

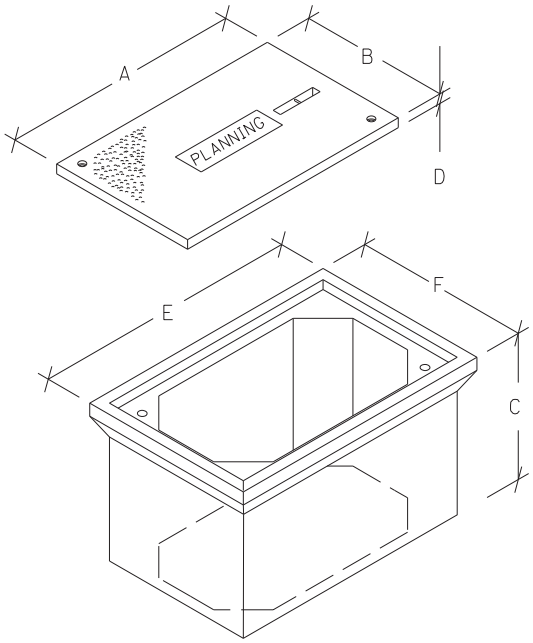

JUNCTION BOX DIMENSIONS (NOMINAL)						
	A	B	C	D*	E	F
TYPE A	23"	14"	18"	2"	25"	16"
TYPE B	18"	11"	12"	1¾"	20"	13"
TYPE C	36"	24"	30"	3"	38"	26"

* MINIMUM
STACKABLE BOXES ARE PERMITTED

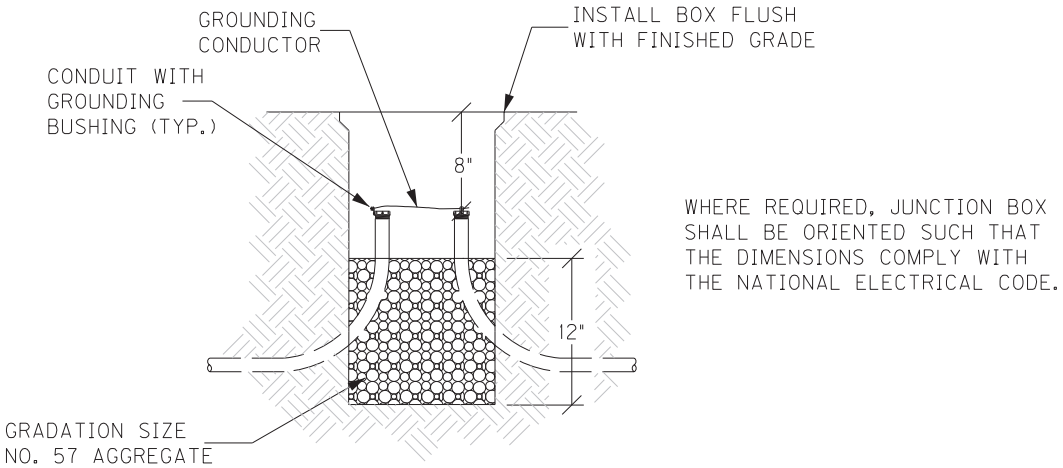

WHERE REQUIRED, JUNCTION BOX SHALL BE ORIENTED SUCH THAT THE DIMENSIONS COMPLY WITH THE NATIONAL ELECTRICAL CODE.

ELEVATION

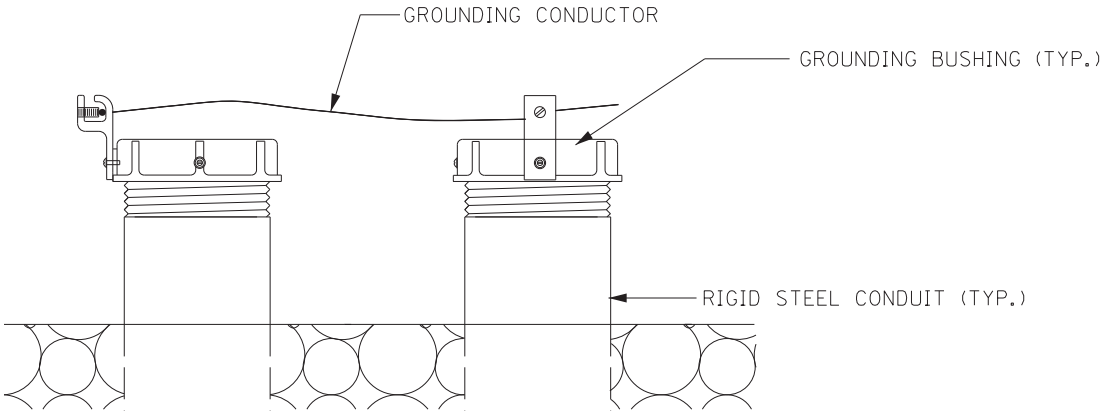

GROUNDING DETAIL

JUNCTION BOX - TYPE A, TYPE B, TYPE C

NOT TO SCALE

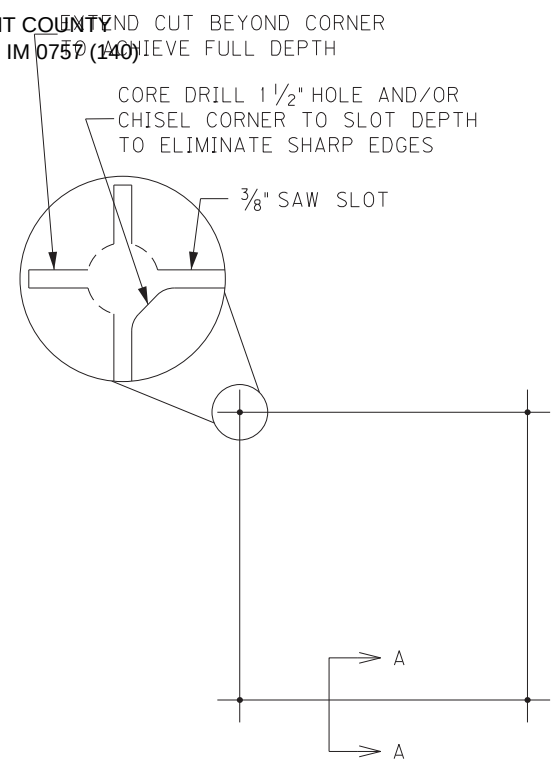

SAW CUT PLAN

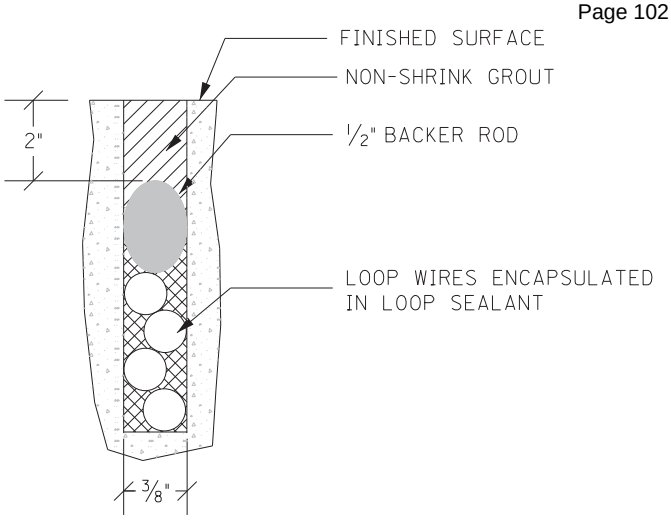

SECTION A-A (CONCRETE)

UNLESS SPECIFIED OTHERWISE, ALL LOOPS SHALL BE 6' x 6' SQUARE, CENTERED IN EACH LANE, WITH FOUR TURNS OF 14 AWG LOOP WIRE.

ADJACENT SAW SLOTS SHALL BE A MINIMUM OF 12" APART.

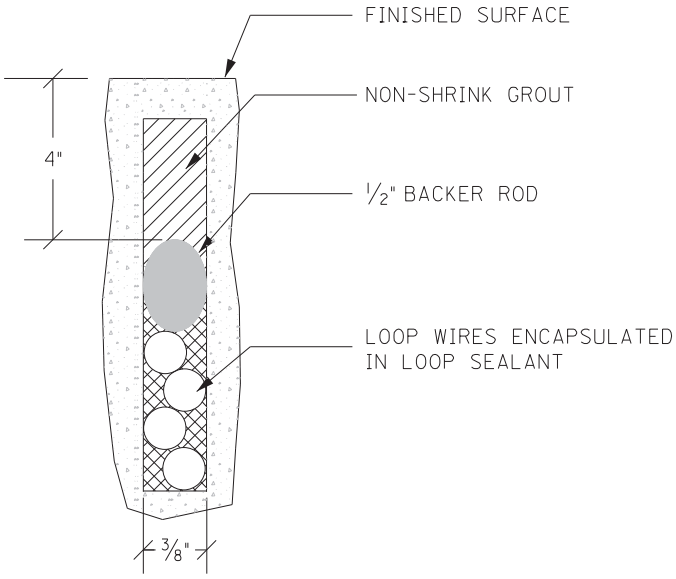

SECTION A-A (ASPHALT)

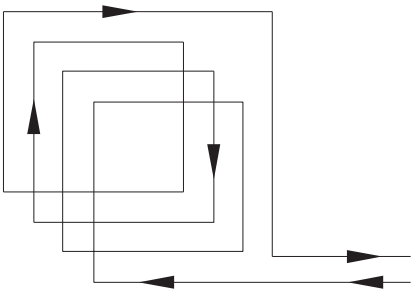

WIRING PLAN

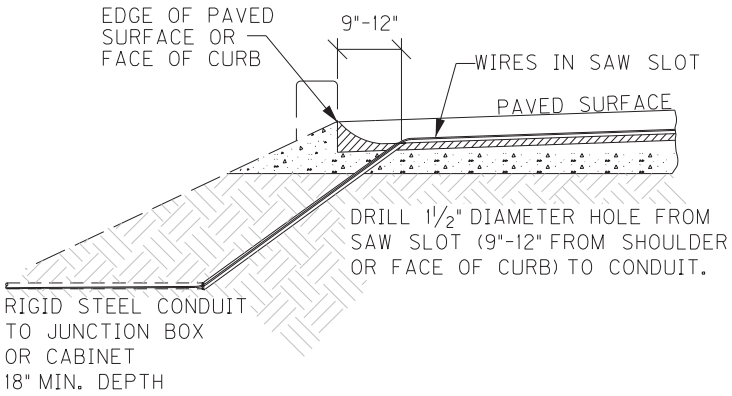

SAW SLOT EDGE OF PAVEMENT TRANSITION

INDUCTIVE LOOP DETECTOR

NOT TO SCALE

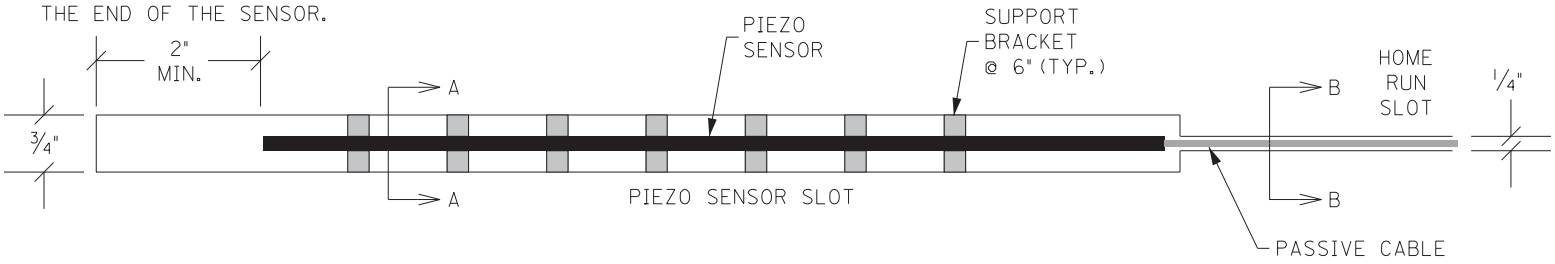

PLAN

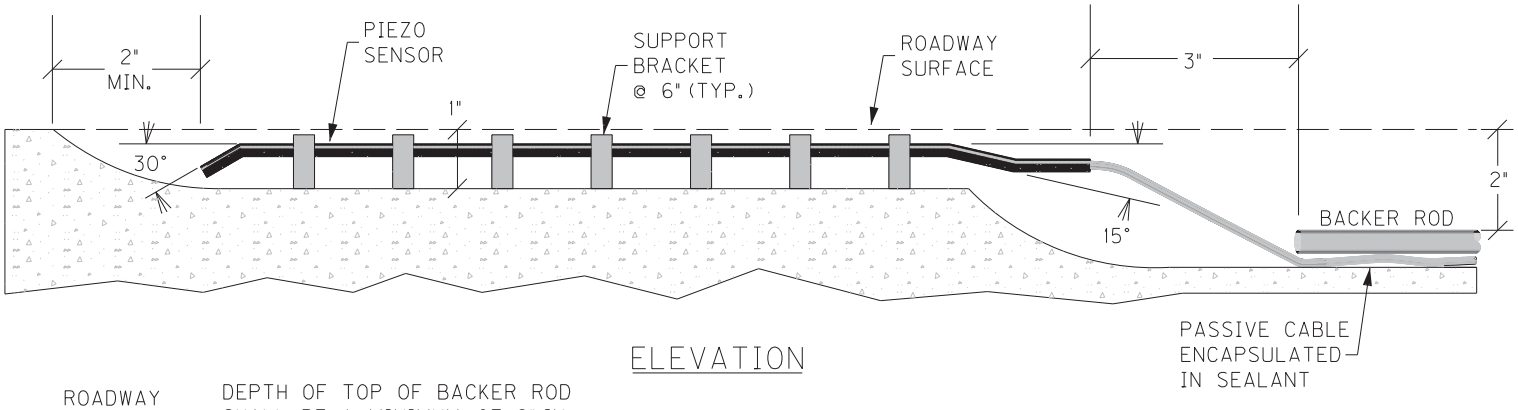

ELEVATION

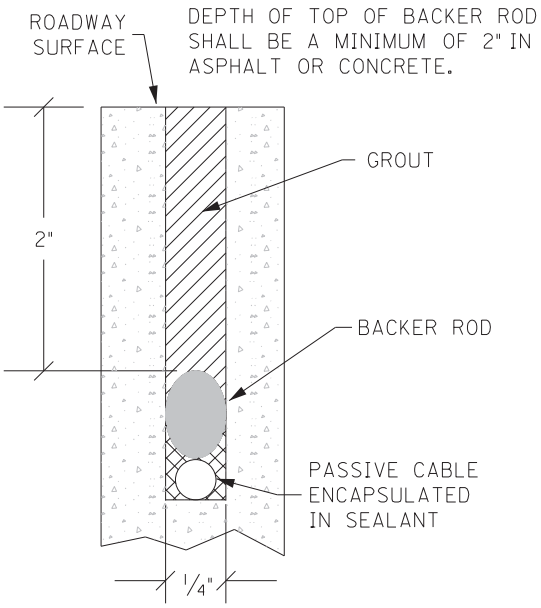

SECTION B-B

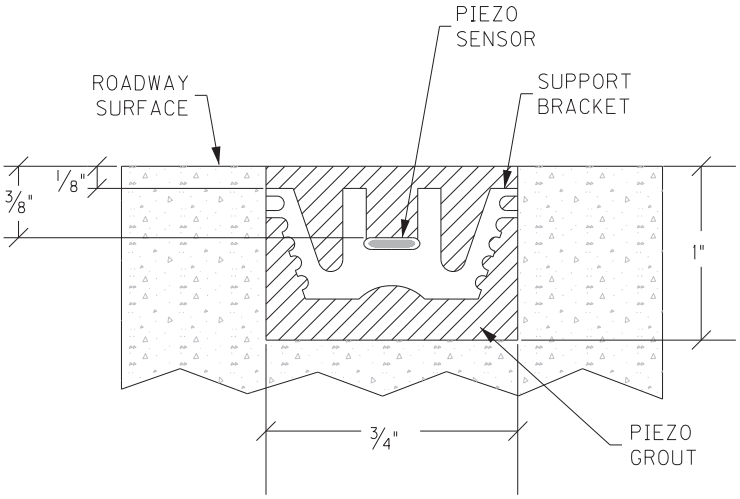

SECTION A-A

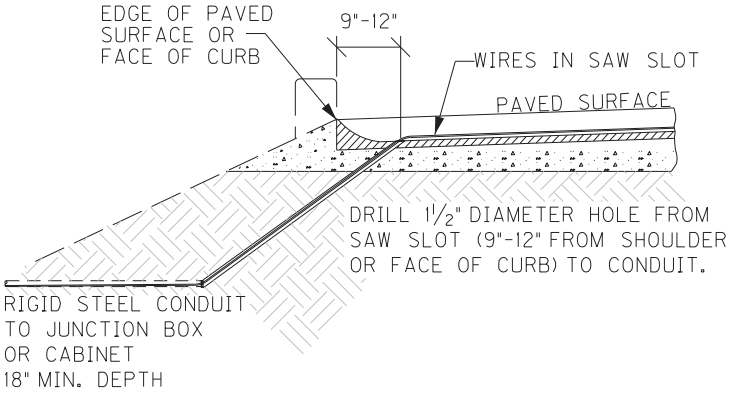

SAW SLOT EDGE OF PAVEMENT TRANSITION

PIEZOELECTRIC SENSOR INSTALLATION

NOT TO SCALE

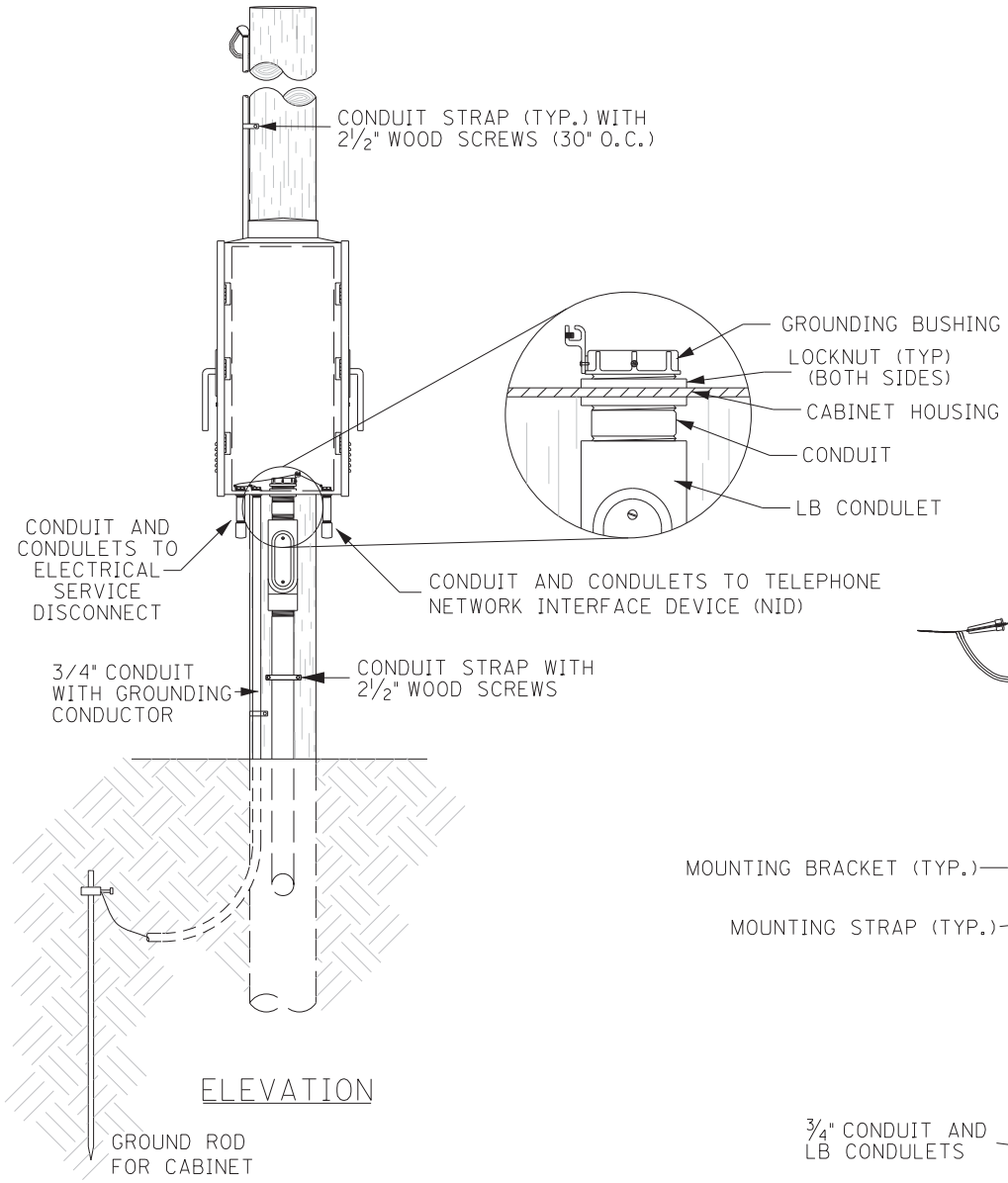

ELEVATION

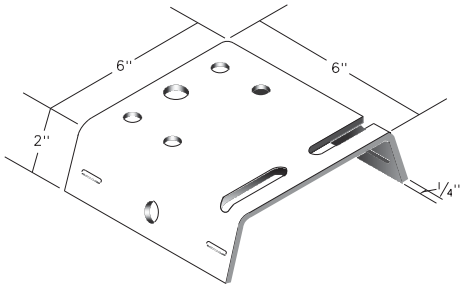

MOUNTING BRACKET (TYPICAL)
SIZE AND NUMBER/POSITIONS
OF OPENINGS MAY DIFFER

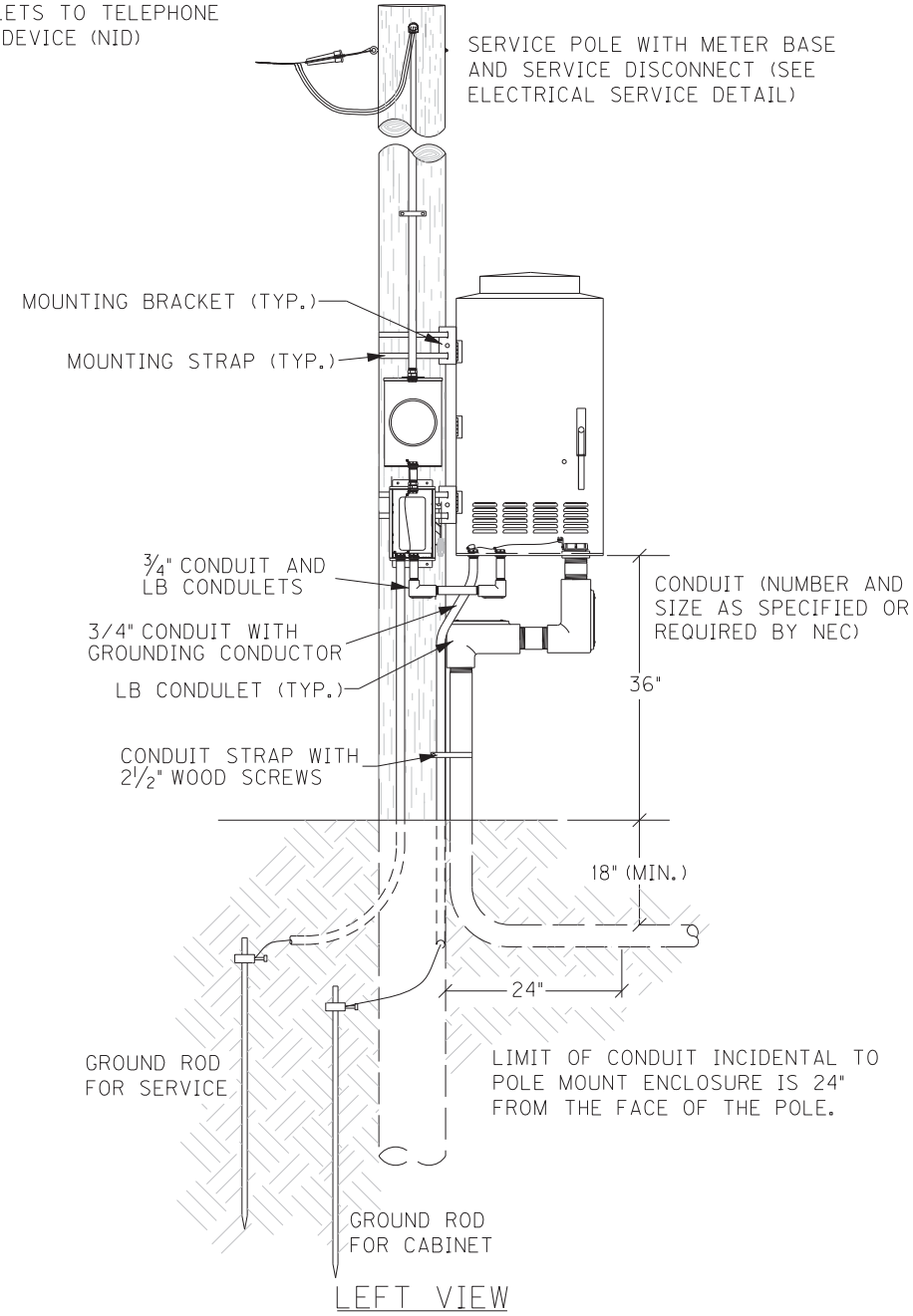

LEFT VIEW

WOOD POLE MOUNT ENCLOSURE

NOT TO SCALE

Right-of-Way Certification Form

Revised 2/22/11

☑ Federal Funded ☑ Original

☐ State Funded ☐ Re-Certification

This form must be completed and submitted to FHWA with the PS&E package for federal-aid funded Interstate, Appalachia, and Major projects. This form shall also be submitted to FHWA for all federal-aid projects that fall under Conditions No. 2 or 3 outlined elsewhere in this form. When Condition No. 2 or 3 apply, KYTC shall resubmit this ROW Certification prior to construction contract Award. For all other federal-aid projects, this form shall be completed and retained in the KYTC project file.

Date: July 10, 2014

Project Name: Pavement Preventive Maintenance I-75
Letting Date:
Project #: 86591 01D
County: Grant
Item #: 06-2047.00
Federal #: FD52

Description of Project: Pavement Preventive Maintenance on North and South bound Interstate 75 from MP 157.1 to 160.9. No Right of Way required verified by Kevin Rust, Branch Manager Engineer Maintenance.

Projects that require NO new or additional right-of-way acquisitions and/or relocations

☒ The proposed transportation improvement will be built within the existing rights-of -way and there are no properties to be acquired, individuals, families, and businesses ("relocatees") to be relocated, or improvements to be removed as a part of this project.

Projects that require new or additional right-of-way acquisitions and/or relocations

☐ Per 23 CFR 635.309, the KYTC hereby certify that all relocatees have been relocated to decent, safe, and sanitary housing or that KYTC has made available to relocatees adequate replacement housing in accordance with the provisions of the current FHWA directive(s) covering the administration of the Highway Relocation Assistance Program and that at least one of the following three conditions has been met. (Check those that apply.)

☐ **Condition 1.** All necessary rights-of-way, including control of access rights when applicable, have been acquired including legal and physical possession. Trial or appeal of cases may be pending in court but legal possession has been obtained. There may be some improvements remaining on the right-of-way, but all occupants have vacated the lands and improvements, and KYTC has physical possession and the rights to remove, salvage, or demolish all improvements and enter on all land. Fair market value has been paid or deposited with the court.

☐ **Condition 2.** Although all necessary rights-of-way have not been fully acquired, the right to occupy and to use all rights-of-way required for the proper execution of the project has been acquired. Trial or appeal of some parcels may be pending in court and on other parcels full legal possession has not been obtained, but right of entry has been obtained, the occupants of all lands and improvements have vacated, and KYTC has physical possession and right to remove, salvage, or demolish all improvements. Fair market value has been paid or deposited with the court for most parcels. Fair market value for all pending parcels will be paid or deposited with the court prior to AWARD of construction contract. (See note 1 below.)

Note 1: The KYTC shall re-submit a right-of-way certification form for this project prior to AWARD of all Federal-Aid construction contracts. Award must not to be made until after KYTC has obtained full legal possession and fair market value for all parcels has been paid or deposited with the court and FHWA has concurred in the re-submitted right-of-way certification.

Right-of-Way Certification Form

Revised 2/22/11

☐ **Condition 3.** The acquisition or right of occupancy and use of a few remaining parcels are not complete and/or some parcels still have occupants. However, all remaining occupants have had replacement housing made available to them in accordance with 49 CFR 24.204. The KYTC is hereby requesting authorization to advertise this project for bids and to proceed with bid letting even though the necessary rights-of-way will not be fully acquired, and/or some occupants will not be relocated, and/or the fair market value will not be paid or deposited with the court for some parcels until after bid letting. KYTC will fully meet all the requirements outlined in 23 CFR 635.309(c)(3) and 49 CFR 24.102(j) and will expedite completion of all acquisitions, relocations, and full payments after bid letting and prior to AWARD of the construction contract or force account construction. A full explanation and reason for this request, including identification of each such parcel and dates on which acquisitions, payments, and relocations will be completed, is attached to this certification form for FHWA concurrence. (See note 2.)

Note 2: The KYTC may request authorization on this basis only in unique and unusual circumstances. Proceeding to bid letting shall be the exception and never become the rule. In all cases, the KYTC shall make extraordinary efforts to expedite completion of the acquisition, payment for all affected parcels, and the relocation of all relocatees prior to AWARD of all Federal-Aid construction contracts or force account construction.

Approved: Eric J. Kinman (Printed Name) — Eric J. Kinman (Signature) — Right-of-Way Supervisor

Approved: DM Loy (Printed Name) — Signature Required (Signature) — Adrie 11 July 2014 — KYTC, Director of ROW &Utilities

No Signatures as per FHWA - KYTC 2013 Stewardship Agreement

Approved: _____ (Printed Name) _____ (Signature) — FHWA, ROW Officer (when applicable)

Right-of-Way Certification Form

Revised 2/22/11

Date: July 10, 2014

Project Name: Pavement Preventive Maintenance I-75
Project #: 86591 01D
Item #: 06-2047.00
Letting Date: _____

County: Grant
Federal #: FD52

This project has 0 total number of parcels to be acquired, and 0 total number of individuals or families to be relocated, as well as 0 total number of businesses to be relocated.

_____ Parcels where acquired by a signed fee simple deed and fair market value has been paid

_____ Parcels have been acquired by IOJ through condemnation and fair market value has been deposited with the court

_____ Parcels have not been acquired at this time (*explain below for each parcel*)

_____ Parcels have been acquired or have a "right of entry" but fair market value has not been paid or has not been deposited with the court *(explain below for each parcel)*

_____ Relocatees have not been relocated from parcels ____, ____, ____, ____, ____, ____, and ____ *(explain below for each parcel)*

Parcel #	Name/Station	Explanation for delayed acquisition, delayed relocation, or delayed payment of fair market value	Proposed date of payment or of relocation

There are 0 billboards and/or 0 cemeteries involved on this project.

There are 0 water or monitoring wells on parcels ____, ____, ____, ____, and ____. All have been acquired and are the responsibility of the project contractor to close/cap.

Form Effective Date: April 1, 2006
Last Revised: February 22, 2011

PART II

SPECIFICATIONS AND STANDARD DRAWINGS

SPECIFICATIONS REFERENCE

Any reference in the plans or proposal to previous editions of the *Standard Specifications for Road and Bridge Construction* and *Standard Drawings* are superseded by *Standard Specifications for Road and Bridge Construction, Edition of 2012* and *Standard Drawings, Edition of 2012 with the 2012 Revision.*

Supplemental Specifications to the
Standard Specifications for Road and Bridge Construction, 2012 Edition
Effective with the August 22, 2014 Letting

Subsection: **Revision:**	102.15 Process Agent. Replace the 1st paragraph with the following: Every corporation doing business with the Department shall submit evidence of compliance with KRS Sections 14A.4-010, 271B.11-010, 271B.11-070, 271B.11-080, 271B.5-010 and 271B.16-220, and file with the Department the name and address of the process agent upon whom process may be served.
Subsection: **Revision:**	105.13 Claims Resolution Process. Delete all references to TC 63-34 and TC 63-44 from the subsection as these forms are no longer available through the forms library and are forms generated within the AASHTO SiteManager software.
Subsection: **Revision:**	108.03 Preconstruction Conference. Replace 8) Staking with the following: 8) Staking (designated by a Professional Engineer or Land Surveyor licensed in the Commonwealth of Kentucky.
Subsection: **Revision:**	109.07.02 Fuel. Revise item Crushed Aggregate Used for Embankment Stabilization to the following: Crushed Aggregate Used for Stabilization of Unsuitable Materials Used for Embankment Stabilization
	Delete the following item from the table. ~~Crushed Sandstone Base (Cement Treated)~~
Subsection: **Revision:**	110.02 Demobilization. Replace the first part of the first sentence of the second paragraph with the following: Perform all work and operations necessary to accomplish final clean-up as specified in the first paragraph of Subsection 105.12;
Subsection: **Revision:**	112.03.12 Project Traffic Coordinator (PTC). Replace the last paragraph of this subsection with the following: Ensure the designated PTC has sufficient skill and experience to properly perform the task assigned and has successfully completed the qualification courses.
Subsection: **Revision:**	112.04.18 Diversions (By-Pass Detours). Insert the following sentence after the 2nd sentence of this subsection. The Department will not measure temporary drainage structures for payment when the contract documents provide the required drainage opening that must be maintained with the diversion. The temporary drainage structures shall be incidental to the construction of the diversion. If the contract documents fail to provide the required drainage opening needed for the diversion, the cost of the temporary drainage structure will be handled as extra work in accordance with section 109.04.
Subsection: **Revision:**	201.03.01 Contractor Staking. Replace the first paragraph with the following: Perform all necessary surveying under the general supervision of a Professional Engineer or Land Surveyor licensed in the Commonwealth of Kentucky.

Supplemental Specifications to the
Standard Specifications for Road and Bridge Construction, 2012 Edition
Effective with the August 22, 2014 Letting

Subsection: **Revision:**	201.04.01 Contractor Staking. Replace the last sentence of the paragraph with the following: Complete the general layout of the project under the supervision of a Professional Engineer or Land Surveyor licensed in the Commonwealth of Kentucky.
Subsection: **Revision:**	206.04.01 Embankment-in-Place. Replace the fourth paragraph with the following: The Department will not measure **suitable** excavation included in the original plans that is disposed of for payment and will consider it incidental to Embankment-in-Place.
Subsection: **Revision:**	208.02.01 Cement. Replace paragraph with the following: Select Type I or Type II cement conforming to Section 801. Use the same type cement throughout the work.
Subsection: **Revision:**	208.03.06 Curing and Protection. Replace the fourth paragraph with the following: Do not allow traffic or equipment on the finished surface until the stabilized subgrade has cured for a total of 7-days with an ambient air temperature above 40 degrees Fahrenheit. A curing day consists of a continuous 24-hour period in which the ambient air temperature does not fall below 40 degrees Fahrenheit. Curing days will not be calculated consecutively, but must total seven (7) , 24-hour days with the ambient air temperature remaining at or above 40 degrees Fahrenheit before traffic or equipment will be allowed to traverse the stabilized subgrade. The Department may allow a shortened curing period when the Contractor requests. The Contractor shall give the Department at least 3 day notice of the request for a shortened curing period. The Department will require a minimum of 3 curing days after final compaction. The Contractor shall furnish cores to the treated depth of the roadbed at 500 feet intervals for each lane when a shortened curing time is requested. The Department will test cores using an unconfined compression test. Roadbed cores must achieve a minimum strength requirement of 80 psi.
Subsection: **Revision:**	208.03.06 Curing and Protection. Replace paragraph eight with the following: At no expense to the Department, repair any damage to the subgrade caused by freezing.
Subsection: **Part:** **Revision:**	212.03.03 Permanent Seeding and Protection. A) Seed Mixtures for Permanent Seeding. Revise **Seed Mix Type I** to the mixture shown below: 50% Kentucky 31 Tall Fescue (Festuca arundinacea) 35% Hard Fescue (Festuca (Festuca longifolia) 10% Ryegrass, Perennial (Lolium perenne) 5% White Dutch Clover (Trifolium repens)
Subsection: **Part:** **Number:** **Revision:**	212.03.03 Permanent Seeding and Protection. A) Seed Mixtures for Permanent Seeding. 2) Replace the paragraph with the following: Permanent Seeding on Slopes Greater than 3:1 in Highway Districts 4, 5, 6, and 7. Apply seed mix Type II at a minimum application rate of 100 pounds per acre. If adjacent to a golf course replace the crown vetch with Kentucky 31 Tall Fescue.

Supplemental Specifications to the
Standard Specifications for Road and Bridge Construction, 2012 Edition
Effective with the August 22, 2014 Letting

Subsection: **Part:** **Number:** **Revision:**	212.03.03 Permanent Seeding and Protection. A) Seed Mixtures for Permanent Seeding. 3) Replace the paragraph with the following: Permanent Seeding on Slopes Greater than 3:1 in Highway Districts 1, 2, 3, 8, 9, 10, 11, and 12. Apply seed mix Type III at a minimum application rate of 100 pounds per acre. If adjacent to crop land or golf course, replace the Sericea Lespedeza with Kentucky 31 Fescue.
Subsection: **Part:** **Revision:**	212.03.03 Permanent Seeding and Protection. B) Procedures for Permanent Seeding. Delete the first sentence of the section.
Subsection: **Part:** **Revision:**	212.03.03 Permanent Seeding and Protection. B) Procedures for Permanent Seeding. Replace the second and third sentence of the section with the following: Prepare a seedbed and apply an initial fertilizer that contains a minimum of 100 pounds of nitrogen, 100 pounds of phosphate, and 100 pounds of potash per acre. Apply agricultural limestone to the seedbed when the Engineer determines it is needed. When required, place agricultural limestone at a rate of 3 tons per acre.
Subsection: **Part:** **Revision:**	212.03.03 Permanent Seeding and Protection. D) Top Dressing. Change the title of part to D) Fertilizer.
Subsection: **Part:** **Revision:**	212.03.03 Permanent Seeding and Protection. D) Fertilizer. Replace the first paragraph with the following: Apply fertilizer at the beginning of the seeding operation and after vegetation is established. Use fertilizer delivered to the project in bags or bulk. Apply initial fertilizer to all areas prior to the seeding or sodding operation at the application rate specified in 212.03.03 B). Apply 20-10-10 fertilizer to the areas after vegetation has been established at a rate of 11.5 pounds per 1,000 square feet. Obtain approval from the Engineer prior to the 2nd fertilizer application. Reapply fertilizer to any area that has a streaked appearance. The reapplication shall be at no additional cost to the Department. Re-establish any vegetation severely damaged or destroyed because of an excessive application of fertilizer at no cost to the Department.
Subsection: **Part:** **Revision:**	212.03.03 Permanent Seeding and Protection. D) Fertilizer. Delete the second paragraph.
Subsection: **Revision:**	212.04.04 Agricultural Limestone. Replace the entire section with the following: The Department will measure the quantity of agricultural limestone in tons.
Subsection: **Revision:**	212.04.05 Fertilizer. Replace the entire section with the following: The Department will measure fertilizer used in the seeding or sodding operations for payment. The Department will measure the quantity by tons.

Supplemental Specifications to the
Standard Specifications for Road and Bridge Construction, 2012 Edition
Effective with the August 22, 2014 Letting

Subsection: **Revision:**	212.05 PAYMENT. Delete the following item code: Code — Pay Item — Pay Unit 05966 — Topdressing Fertilizer — Ton
Subsection: **Revision:**	212.05 PAYMENT. Add the following pay items: Code — Pay Item — Pay Unit 05963 — Initial Fertilizer — Ton 05964 — 20-10-10 Fertilizer — Ton 05992 — Agricultural Limestone — Ton
Subsection: **Revision:**	213.03.02 Progress Requirements. Replace the last sentence of the third paragraph with the following: Additionally, the Department will apply a penalty equal to the liquidated damages when all aspects of the work are not coordinated in an acceptable manner within 7 calendar days after written notification.
Subsection: **Part:** **Revision:**	213.03.05 Temporary Control Measures. E) Temporary Seeding and Protection. Delete the second sentence of the first paragraph.
Subsection: **Table:** **Revision:**	304.02.01 Physical Properties. Required Geogrid Properties Replace all references to Test Method "GRI-GG2-87" with ASTM D 7737.
Subsection: **Part:** **Revision:**	402.03.02 Contractor Quality Control and Department Acceptance. B) Sampling. Replace the second sentence with the following: The Department will determine when to obtain the quality control samples using the random-number feature of the mix design submittal and approval spreadsheet. The Department will randomly determine when to obtain the verification samples required in Subsections 402.03.03 and 402.03.04 using the Asphalt Mixture Sample Random Tonnage Generator.
Subsection: **Part:** **Number:** **Revision:**	402.03.02 Contractor Quality Control and Department Acceptance. D) Testing Responsibilities. 3) VMA. Add the following paragraph below Number 3) VMA: Retain the AV/VMA specimens and one additional corresponding G_{mm} sample for 5 working days for mixture verification testing by the Department. For Specialty Mixtures, retain a mixture sample for 5 working days for mixture verification testing by the Department. When the Department's test results do not verify that the Contractor's quality control test results are within the acceptable tolerances according to Subsection 402.03.03, retain the samples and specimens from the affected sublot(s) for the duration of the project.
Subsection: **Part:** **Number:** **Revision:**	402.03.02 Contractor Quality Control and Department Acceptance. D) Testing Responsibilities. 4) Density. Replace the second sentence of the Option A paragraph with the following: Perform coring by the end of the following work day.

Supplemental Specifications to the
Standard Specifications for Road and Bridge Construction, 2012 Edition
Effective with the August 22, 2014 Letting

Subsection: **Part:** **Number:** **Revision:**	402.03.02 Contractor Quality Control and Department Acceptance. D) Testing Responsibilities. 5) Gradation. Delete the second paragraph.
Subsection: **Part:** **Number:** **Revision:**	402.03.02 Contractor Quality Control and Department Acceptance. H) Unsatisfactory Work. 1) Based on Lab Data. Replace the second paragraph with the following: When the Engineer determines that safety concerns or other considerations prohibit an immediate shutdown, continue work and the Department will make an evaluation of acceptability according to Subsection 402.03.05.
Subsection: **Revision:**	402.03.03 Verification. Replace the first paragraph with the following: **402.03.03 Mixture Verification.** For volumetric properties, the Department will perform a minimum of one verification test for AC, AV, and VMA according to the corresponding procedures as given in Subsection 402.03.02. The Department will randomly determine when to obtain the verification sample using the Asphalt Mixture Sample Random Tonnage Generator. For specialty mixtures, the Department will perform one AC and one gradation determination per lot according to the corresponding procedures as given in Subsection 402.03.02. However, Department personnel will not perform AC determinations according to KM 64-405. The Contractor will obtain a quality control sample at the same time the Department obtains the mixture verification sample and perform testing according to the procedures given in Subsection 402.03.02. If the Contractor's quality control sample is verified by the Department's test results within the tolerances provided below, the Contractor's sample will serve as the quality control sample for the affected sublot. The Department may perform the mixture verification test on the Contractor's equipment or on the Department's equipment.
Subsection: **Part:** **Revision:**	402.03.03 Verification. A) Evaluation of Sublot(s) Verified by Department. Replace the third sentence of the second paragraph with the following: When the paired *t* -test indicates that the Contractor's data and Department's data are possibly not from the same population, the Department will investigate the cause for the difference according to Subsection 402.03.05 and implement corrective measures as the Engineer deems appropriate.
Subsection: **Part:** **Revision:**	402.03.03 Verification. B) Evaluation of Sublots Not Verified by Department. Replace the third sentence of the first paragraph with the following: When differences between test results are not within the tolerances listed below, the Department will resolve the discrepancy according to Subsection 402.03.05.

Supplemental Specifications to the
Standard Specifications for Road and Bridge Construction, 2012 Edition
Effective with the August 22, 2014 Letting

Subsection: **Part:** **Revision:**	402.03.03 Verification. B) Evaluation of Sublots Not Verified by Department. Replace the third sentence of the second paragraph with the following: When the *F* -test or *t* -test indicates that the Contractor's data and Department's data are possibly not from the same population, the Department will investigate the cause for the difference according to Subsection 402.03.05 and implement corrective measures as the Engineer deems appropriate.
Subsection: **Part:** **Revision:**	402.03.03 Verification. C) Test Data Patterns. Replace the second sentence with the following: When patterns indicate substantial differences between the verified and non-verified sublots, the Department will perform further comparative testing according to subsection 402.03.05.
Subsection: **Revision:**	402.03 CONSTRUCTION. Add the following subsection: **402.03.04 Testing Equipment and Technician Verification.** For mixtures with a minimum quantity of 20,000 tons and for every 20,000 tons thereafter, the Department will obtain an additional verification sample at random using the Asphalt Mixture Sample Random Tonnage Generator in order to verify the integrity of the Contractor's and Department's laboratory testing equipment and technicians. The Department will obtain a mixture sample of at least 150 lb at the asphalt mixing plant according to KM 64-425 and split it according to AASHTO R 47. The Department will retain one split portion of the sample and provide the other portion to the Contractor. At a later time convenient to both parties, the Department and Contractor will simultaneously reheat the sample to the specified compaction temperature and test the mixture for AV and VMA using separate laboratory equipment according to the corresponding procedures given in Subsection 402.03.02. The Department will evaluate the differences in test results between the two laboratories. When the difference between the results for AV or VMA is not within ± 2.0 percent, the Department will investigate and resolve the discrepancy according to Subsection 402.03.05.
Subsection: **Revision:**	402.03.04 Dispute Resolution. Change the subsection number to 402.03.05.
Subsection: **Part:** **Table:** **Revision:**	402.05 PAYMENT. Lot Pay Adjustment Schedule Compaction Option A Base and Binder Mixtures AC Replace the Deviation from JMF(%) that corresponds to a Pay Value of 0.95 to ±0.6.
Subsection: **Revision:**	403.02.10 Material Transfer Vehicle (MTV). Replace the first sentence with the following: In addition to the equipment specified above, provide a MTV with the following minimum characteristics:
Subsection: **Revision:**	412.02.09 Material Transfer Vehicle (MTV). Replace the paragraph with the following: Provide and utilize a MTV with the minimum characteristics outlined in section 403.02.10.

Supplemental Specifications to the
Standard Specifications for Road and Bridge Construction, 2012 Edition
Effective with the August 22, 2014 Letting

Subsection: **Revision:**	412.03.07 Placement and Compaction. Replace the first paragraph with the following: Use a MTV when placing SMA mixture in the driving lanes. The MTV is not required on ramps and/or shoulders unless specified in the contract. When the Engineer determines the use of the MTV is not practical for a portion of the project, the Engineer may waive its requirement for that portion of pavement by a letter documenting the waiver.
Subsection: **Revision:**	412.04 MEASUREMENT. Add the following subsection: 412.04.03. Material Transfer Vehicle (MTV). The Department will not measure the MTV for payment and will consider its use incidental to the asphalt mixture.
Subsection: **Part:** **Revision:**	501.03.19 Surface Tolerances and Testing Surface. B) Ride Quality. Add the following to the end of the first paragraph: The Department will specify if the ride quality requirements are Category A or Category B when ride quality is specified in the Contract. Category B ride quality requirements shall apply when the Department fails to classify which ride quality requirement will apply to the Contract.
Subsection: **Revision:**	603.03.06 Cofferdams. Replace the seventh sentence of paragraph one with the following: Submit drawings that are stamped by a Professional Engineer licensed in the Commonwealth of Kentucky.
Subsection: **Revision:**	605.03.04 Tack Welding. Insert the subsection and the following: 605.03.04 Tack Welding. The Department does not allow tack welding.
Subsection: **Part:** **Number:** **Revision:**	606.03.17 Special Requirements for Latex Concrete Overlays. A) Existing Bridges and New Structures. 1) Prewetting and Grout-Bond Coat. Add the following sentence to the last paragraph: Do not apply a grout-bond coat on bridge decks prepared by hydrodemolition.
Subsection: **Revision:**	609.03 Construction. Replace Subsection 609.03.01 with the following: 609.03.01 A) Swinging the Spans. Before placing concrete slabs on steel spans or precast concrete release the temporary erection supports under the bridge and swing the span free on its supports. 609.03.01 B) Lift Loops. Cut all lift loops flush with the top of the precast beam once the beam is placed in the final location and prior to placing steel reinforcement. At locations where lift loops are cut, paint the top of the beam with galvanized or epoxy paint.
Subsection: **Revision:**	611.03.02 Precast Unit Construction. Replace the first sentence of the subsection with the following: Construct units according to ASTM C1577, **replacing Table 1 (Design Requirements for Precast Concrete Box Sections Under Earth, Dead and HL-93 Live Load Conditions) with KY Table 1 (Precast Culvert KYHL-93 Design Table)**, and Section 605 with the following exceptions and additions:

Supplemental Specifications to the
Standard Specifications for Road and Bridge Construction, 2012 Edition
Effective with the August 22, 2014 Letting

Subsection: **Number:** **Revision:**	613.03.01 Design. 2) Replace "AASHTO Standard Specifications for Highway Bridges" with "AASHTO LRFD Bridge Design Specifications"
Subsection: **Revision:**	615.06.02 Add the following sentence to the end of the subsection. The ends of units shall be normal to walls and centerline except exposed edges shall be beveled ¾ inch.
Subsection: **Revision:**	615.06.03 Placement of Reinforcement in Precast 3-Sided Units. Replace the reference of 6.6 in the section to 615.06.06.
Subsection: **Revision:**	615.06.04 Placement of Reinforcement for Precast Endwalls. Replace the reference of 6.7 in the section to 615.06.07.
Subsection: **Revision:**	615.06.06 Laps, Welds, and Spacing for Precast 3-Sided Units. Replace the subsection with the following: Tension splices in the circumferential reinforcement shall be made by lapping. Laps may not be tack welded together for assembly purposes. For smooth welded wire fabric, the overlap shall meet the requirements of AASHTO 2012 Bridge Design Guide Section 5.11.2.5.2 and AASHTO 2012 Bridge Design Guide Section 5.11.6.3. For deformed welded wire fabric, the overlap shall meet the requirements of AASHTO 2012 Bridge Design Guide Section 5.11.2.5.1 and AASHTO 2012 Bridge Design Guide Section 5.11.6.2. The overlap of welded wire fabric shall be measured between the outer most longitudinal wires of each fabric sheet. For deformed billet-steel bars, the overlap shall meet the requirements of AASHTO 2012 Bridge Design Guide Section 5.11.2.1. For splices other than tension splices, the overlap shall be a minimum of 12" for welded wire fabric or deformed billet-steel bars. The spacing center to center of the circumferential wires in a wire fabric sheet shall be no less than 2 inches and no more than 4 inches. The spacing center to center of the longitudinal wires shall not be more than 8 inches. The spacing center to center of the longitudinal distribution steel for either line of reinforcing in the top slab shall be not more than 16 inches.
Subsection: **Revision:**	615.06.07 Laps, Welds, and Spacing for Precast Endwalls. Replace the subsection with the following: Splices in the reinforcement shall be made by lapping. Laps may not be tack welded together for assembly purposes. For smooth welded wire fabric, the overlap shall meet the requirements of AASHTO 2012 Bridge Design Guide Section 5.11.2.5.2 and AASHTO 2012 Bridge Design Guide Section 5.11.6.3. For deformed welded wire fabric, the overlap shall meet the requirements of AASHTO 2012 Bridge Design Guide Section 5.11.2.5.1 and AASHTO 2012 Bridge Design Guide Section 5.11.6.2. For deformed billet-steel bars, the overlap shall meet the requirements of AASHTO 2012 Bridge Design Guide Section 5.11.2.1. The spacing center-to-center of the wire fabric sheet shall not be less than 2 inches or more than 8 inches.

Supplemental Specifications to the
Standard Specifications for Road and Bridge Construction, 2012 Edition
Effective with the August 22, 2014 Letting

Subsection: **Revision:**	615.08.01 Type of Test Specimen. Replace the subsection with the following: Start-up slump, air content, unit weight, and temperature tests will be performed each day on the first batch of concrete. Acceptable start-up results are required for production of the first unit. After the first unit has been established, random acceptance testing is performed daily for each 50 yd^3 (or fraction thereof). In addition to the slump, air content, unit weight, and temperature tests, a minimum of one set of cylinders shall be required each time plastic property testing is performed.
Subsection: **Revision:**	615.08.02 Compression Testing. Delete the second sentence.
Subsection: **Revision:**	615.08.04 Acceptability of Core Tests. Delete the entire subsection.
Subsection: **Revision:**	615.12 Inspection. Add the following sentences to the end of the subsection: Units will arrive at jobsite with the "Kentucky Oval" stamped on the unit which is an indication of acceptable inspection at the production facility. Units shall be inspected upon arrival for any evidence of damage resulting from transport to the jobsite.
Subsection: **Revision:**	716.02.02 Paint. Replace sentence with the following: Conform to Section 821.
Subsection: **Revision:**	716.03 CONSTRUCTION. Replace bullet 5) with the following: 5) AASHTO Standard Specifications for Structural Supports for Highway Signs, Luminaires, and Traffic Signals, 2013-6th Edition with current interims,
Subsection: **Revision:**	716.03.02 Lighting Standard Installation. Replace the second sentence with the following: Regardless of the station and offset noted, locate all poles/bases behind the guardrail a minimum of four feet from the front face of the guardrail to the front face of the pole base.
Subsection: **Part:** **Revision:**	716.03.02 Lighting Standard Installation. A) Conventional Installation. Replace the third sentence with the following: Orient the transformer base so the door is positioned on the side away from on-coming traffic.
Subsection: **Part:** **Number:** **Revision:**	716.03.02 Lighting Standard Installation. A) Conventional Installation. 1) Breakaway Installation and Requirements. Replace the first sentence with the following: For breakaway supports, conform to Section 12 of the AASHTO Standard Specifications for Structural Supports for Highway Signs, Luminaires, and Traffic Signals, 2013-6th Edition with current interims.
Subsection: **Part:** **Revision:**	716.03.02 Lighting Standard Installation. B) High Mast Installation Replace the first sentence with the following: Install each high mast pole as noted on plans.
Subsection: **Part:** **Number:** **Revision:**	716.03.02 Lighting Standard Installation. B) High Mast Installation 2) Concrete Base Installation Modification of Chart and succeeding paragraphs within this section:

Supplemental Specifications to the
Standard Specifications for Road and Bridge Construction, 2012 Edition
Effective with the August 22, 2014 Letting

Drilled Shaft Depth Data							
Level Ground		3:1 Ground Slope		2:1 Ground Slope		1.5:1 Ground Slope (2)	
Soil	Rock	Soil	Rock	Soil	Rock	Soil	Rock
17 ft	7 ft	19 ft	7 ft	20 ft	7 ft	(1)	7 ft

Steel Requirements			
Vertical Bars		Ties or Spiral	
Size	Total	Size	Spacing or Pitch
#10	16	#4	12 inch

(1): Shaft length is 22' for cohesive soil only. For cohesionless soil, contact geotechnical branch for design.
(2): Do not construct high mast drilled shafts on ground slopes steeper than 1.5:1 without the approval of the Division of Traffic.

If rock is encountered during drilling operations and confirmed by the engineer to be of sound quality, the shaft is only required to be further advanced into the rock by the length of rock socket shown in the table. The total length of the shaft need not be longer than that of soil alone. Both longitudinal rebar length and number of ties or spiral length shall be adjusted accordingly.

If a shorter depth is desired for the drilled shaft, the contractor shall provide, for the state's review and approval, a detailed column design with individual site specific soil and rock analysis performed and approved by a Professional Engineer licensed in the Commonwealth of Kentucky.

Spiral reinforcement may be substituted for ties. If spiral reinforcement is used, one and one-half closed coils shall be provided at the ends of each spiral unit. Subsurface conditions consisting of very soft clay or very loose saturated sand could result in soil parameters weaker than those assumed. Engineer shall consult with the geotechnical branch if such conditions are encountered.

The bottom of the drilled hole shall be firm and thoroughly cleaned so no loose or compressible materials are present at the time of the concrete placement. If the drilled hole contains standing water, the concrete shall be placed using a tremie to displace water. Continuous concrete flow will be required to insure full displacement of any water.

The reinforcement and anchor bolts shall be adequately supported in the proper positions so no movement occurs during concrete placement. Welding of anchor bolts to the reinforcing cage is unacceptable, templates shall be used. Exposed portions of the foundation shall be formed to create a smooth finished surface. All forming shall be removed upon completion of foundation construction.

Subsection: 716.03.03 Trenching.
Part: A) Trenching of Conduit for Highmast Ducted Cables.
Revision: Add the following after the first sentence: If depths greater than 24 inches are necessary, obtain the Engineer's approval and maintain the required conduit depths coming into the junction boxes. No payment for additional junction boxes for greater depths will be allowed.

Subsection: **Part:** **Revision:**	716.03.03 Trenching. B) Trenching of Conduit for Non-Highmast Cables. Add the following after the second sentence: If depths greater than 24 inches are necessary for either situation listed previously, obtain the Engineer's approval and maintain the required conduit depths coming into the junction boxes. No payment for additional junction boxes for greater depths will be allowed.
Subsection: **Revision:**	716.03.10 Junction Boxes. Replace subsection title with the following: Electrical Junction Box.
Subsection: **Revision:**	716.04.07 Pole with Secondary Control Equipment. Replace the paragraph with the following: The Department will measure the quantity as each individual unit furnished and installed. The Department will not measure mounting the cabinet to the pole, backfilling, restoration, any necessary hardware to anchor pole, or electrical inspection fees, and will consider them incidental to this item of work. The Department will also not measure furnishing and installing electrical service conductors, specified conduits, meter base, transformer, service panel, fused cutout, fuses, lighting arrestors, photoelectrical control, circuit breaker, contactor, manual switch, ground rods, and ground wires and will consider them incidental to this item of work.
Subsection: **Revision:**	716.04.08 Lighting Control Equipment. Replace the paragraph with the following: The Department will measure the quantity as each individual unit furnished and installed. The Department will not measure constructing the concrete base, excavation, backfilling, restoration, any necessary anchors, or electrical inspection fees, and will consider them incidental to this item of work. The Department will also not measure furnishing and installing electrical service conductors, specified conduits, meter base, transformer, service panel, fused cutout, fuses, lighting arrestors, photoelectrical control, circuit breakers, contactor, manual switch, ground rods, and ground wires and will consider them incidental to this item of work.
Subsection: **Revision:**	716.04.09 Luminaire. Replace the first sentence with the following: The Department will measure the quantity as each individual unit furnished and installed.
Subsection: **Revision:**	716.04.10 Fused Connector Kits. Replace the first sentence with the following: The Department will measure the quantity as each individual unit furnished and installed.
Subsection: **Revision:**	716.04.13 Junction Box. Replace the subsection title with the following: Electrical Junction Box Type Various.
Subsection: **Part:** **Revision:**	716.04.13 Junction Box. A) Junction Electrical. Rename A) Junction Electrical to the following: A) Electrical Junction Box.
Subsection: **Revision:**	716.04.14 Trenching and Backfilling. Replace the second sentence with the following: The Department will not measure excavation, backfilling, underground utility warning tape (if required), the restoration of disturbed areas to original condition, and will consider them incidental to this item of work.

Supplemental Specifications to the
Standard Specifications for Road and Bridge Construction, 2012 Edition
Effective with the August 22, 2014 Letting

Subsection: **Revision:**	716.04.18 Remove Lighting. Replace the paragraph with the following: The Department will measure the quantity as a lump sum for the removal of lighting equipment. The Department will not measure the disposal of all equipment and materials off the project by the contractor. The Department also will not measure the transportation of the materials and will consider them incidental to this item of work.
Subsection: **Revision:**	716.04.20 Bore and Jack Conduit. Replace the paragraph with the following: The Department will measure the quantity in linear feet. This item shall include all work necessary for boring and installing conduit under an existing roadway. Construction methods shall be in accordance with Sections 706.03.02, paragraphs 1, 2, and 4.
Subsection: **Revision:**	716.05 PAYMENT. Replace items 04810-04811, 20391NS835 and, 20392NS835 under Code, Pay Item, and Pay Unit with the following: Code — Pay Item — Pay Unit 04810 — Electrical Junction Box — Each 04811 — Electrical Junction Box Type B — Each 20391NS835 — Electrical Junction Box Type A — Each 20392NS835 — Electrical Junction Box Type C — Each
Subsection: **Revision:**	723.02.02 Paint. Replace sentence with the following: Conform to Section 821.
Subsection: **Revision:**	723.03 CONSTRUCTION. Replace bullet 5) with the following: 5) AASHTO Standard Specifications for Structural Supports for Highway Signs, Luminaires, and Traffic Signals, 2013-6th Edition with current interims,
Subsection: **Revision:**	723.03.02 Poles and Bases Installation. Replace the first sentence with the following: Regardless of the station and offset noted, locate all poles/bases behind the guardrail a minimum of four feet from the front face of the guardrail to the front face of the pole base.
Subsection: **Part:** **Revision:**	723.03.02 Poles and Bases Installation. A) Steel Strain and Mastarm Poles Installation Replace the second paragraph with the following: For concrete base installation, see Section 716.03.02, B), 2), Paragraphs 2-7. Drilled shaft depth shall be based on the soil conditions encountered during drilling and slope condition at the site. Refer to the design chart below:
Subsection: **Part:** **Revision:**	723.03.02 Poles and Bases Installation. B) Pedestal or Pedestal Post Installation. Replace the fourth sentence of the paragraph with the following: For breakaway supports, conform to Section 12 of the AASHTO Standard Specifications for Structural Supports for Highway Signs, Luminaires, and Traffic Signals, 2013-6th Edition with current interims.

Supplemental Specifications to the
Standard Specifications for Road and Bridge Construction, 2012 Edition
Effective with the August 22, 2014 Letting

Subsection: **Part:** **Revision:**	723.03.03 Trenching. A) Under Roadway. Add the following after the second sentence: If depths greater than 24 inches are necessary, obtain the Engineer's approval and maintain ether required conduit depths coming into the junction boxes. No payment for additional junction boxes for greater depths will be allowed.
Subsection: **Revision:**	723.03.11 Wiring Installation. Add the following sentence between the fifth and sixth sentences: Provide an extra two feet of loop wire and lead-in past the installed conduit in poles, pedestals, and junction boxes.
Subsection: **Revision:**	723.03.12 Loop Installation. Replace the fourth sentence of the 2nd paragraph with the following: Provide an extra two feet of loop wire and lead-in past the installed conduit in poles, pedestals, and junction boxes.
Subsection: **Revision:**	723.04.02 Junction Box. Replace subsection title with the following: Electrical Junction Box Type Various.
Subsection: **Revision:**	723.04.03 Trenching and Backfilling. Replace the second sentence with the following: The Department will not measure excavation, backfilling, underground utility warning tape (if required), the restoration of disturbed areas to original condition, and will consider them incidental to this item of work.
Subsection: **Revision:**	723.04.10 Signal Pedestal. Replace the second sentence with the following: The Department will not measure excavation, concrete, reinforcing steel, specified conduits, fittings, ground rod, ground wire, backfilling, restoring disturbed areas, or other necessary hardware and will consider them incidental to this item of work.
Subsection: **Revision:**	723.04.15 Loop Saw Slot and Fill. Replace the second sentence with the following: The Department will not measure sawing, cleaning and filling induction loop saw slot, loop sealant, backer rod, and grout and will consider them incidental to this item of work.
Subsection: **Revision:**	723.04.16 Pedestrian Detector. Replace the paragraph with the following: The Department will measure the quantity as each individual unit furnished, installed and connected to pole/pedestal. The Department will not measure installing R10-3e (with arrow) sign, furnishing and installing mounting hardware for sign and will consider them incidental to this item of work.
Subsection: **Revision:**	723.04.18 Signal Controller- Type 170. Replace the second sentence with the following: The Department will not measure constructing the concrete base or mounting the cabinet to the pole, connecting the signal and detectors, excavation, backfilling, restoration, any necessary pole mounting hardware, electric service, or electrical inspection fees and will consider them incidental to this item of work. The Department will also not measure furnishing and connecting the induction of loop amplifiers, pedestrian isolators, load switches, model 400 modem card; furnishing and installing electrical service conductors, specified conduits, anchors, meter base, fused cutout, fuses, ground rods, ground wires and will consider them incidental to this item of work.

Supplemental Specifications to the
Standard Specifications for Road and Bridge Construction, 2012 Edition
Effective with the August 22, 2014 Letting

Subsection: **Revision:**	723.04.20 Install Signal Controller - Type 170. Replace the paragraph with the following: The Department will measure the quantity as each individual unit installed. The Department will not measure constructing the concrete base or mounting the cabinet to the pole, connecting the signal and detectors, and excavation, backfilling, restoration, any necessary pole mounting hardware, electric service, or electrical inspection fees and will consider them incidental to this item of work. The Department will also not measure connecting the induction loop amplifiers, pedestrian, isolators, load switches, model 400 modem card; furnishing and installing electrical service conductors, specified conduits, anchors, meter base, fused cutout, fuses, ground rods, ground wires and will consider them incidental to this item of work.
Subsection: **Revision:**	723.04.22 Remove Signal Equipment. Replace the paragraph with the following: The Department will measure the quantity as a lump sum removal of signal equipment. The Department will not measure the return of control equipment and signal heads to the Department of Highways as directed by the District Traffic Engineer. The Department also will not measure the transportation of materials of the disposal of all other equipment and materials off the project by the contractor and will consider them incidental to this item of work.
Subsection: **Revision:**	723.04.28 Install Pedestrian Detector Audible. Replace the second sentence with the following: The Department will not measure installing sign R10-3e (with arrow) and will consider it incidental to this item of work.
Subsection: **Revision:**	723.04.29 Audible Pedestrian Detector. Replace the second sentence with the following: The Department will not measure furnishing and installing the sign R10-3e (with arrow) and will consider it incidental to this item of work.
Subsection: **Revision:**	723.04.30 Bore and Jack Conduit. Replace the paragraph with the following: The Department will measure the quantity in linear feet. This item shall include all work necessary for boring and installing conduit under an existing roadway. Construction methods shall be in accordance with Sections 706.03.02, paragraphs 1, 2, and 4.
Subsection: **Revision:**	723.04.31 Install Pedestrian Detector. Replace the paragraph with the following: The Department will measure the quantity as each individual unit installed and connected to pole/pedestal. The Department will not measure installing sign R 10-3e (with arrow) and will consider it incidental to this item of work.
Subsection: **Revision:**	723.04.32 Install Mast Arm Pole. Replace the second sentence with the following: The Department will not measure arms, signal mounting brackets, anchor bolts, or any other necessary hardware and will consider them incidental to this item of work.
Subsection: **Revision:**	723.04.33 Pedestal Post. Replace the second sentence with the following: The Department will not measure excavation, concrete, reinforcing steel, anchor bolts, conduit, fittings, ground rod, ground wire, backfilling, restoration, or any other necessary hardware and will consider them incidental to this item of work.

Supplemental Specifications to the
Standard Specifications for Road and Bridge Construction, 2012 Edition
Effective with the August 22, 2014 Letting

Subsection: **Revision:**	723.04.36 Traffic Signal Pole Base. Replace the second sentence with the following: The Department will not measure excavation, reinforcing steel, anchor bolts, specified conduits, ground rods, ground wires, backfilling, or restoration and will consider them incidental to this item of work.
Subsection: **Revision:**	723.04.37 Install Signal Pedestal. Replace the second sentence with the following: The Department will not measure excavation, concrete, reinforcing steel, anchor bolts, specified conduits, fittings, ground rod, ground wire, backfilling, restoration, or any other necessary hardware and will consider them incidental to this item of work.
Subsection: **Revision:**	723.04.38 Install Pedestal Post. Replace the second sentence with the following: The Department will not measure excavation, concrete, reinforcing steel, anchor bolts, specified conduits, fittings, ground rod, ground wire, backfilling, restoration, or any other necessary hardware and will consider them incidental to this item of work.
Subsection: **Revision:**	723.05 PAYMENT. Replace items 04810-04811, 20391NS835 and, 20392NS835 under Code, Pay Item, and Pay Unit with the following: Code — Pay Item — Pay Unit 04810 — Electrical Junction Box — Each 04811 — Electrical Junction Box Type B — Each 20391NS835 — Electrical Junction Box Type A — Each 20392NS835 — Electrical Junction Box Type C — Each
Subsection: **Revision:**	804.01.02 Crushed Sand. Delete last sentence of the section.
Subsection: **Revision:**	804.01.06 Slag. Add subsection and following sentence. Provide blast furnace slag sand where permitted. The Department will allow steel slag sand only in asphalt surface applications.
Subsection: **Revision:**	804.04 Asphalt Mixtures. Replace the subsection with the following: Provide natural, crushed, conglomerate, or blast furnace slag sand, with the addition of filler as necessary, to meet gradation requirements. The Department will allow any combination of natural, crushed, conglomerate or blast furnace slag sand when the combination is achieved using cold feeds at the plant. The Engineer may allow other fine aggregates.
Subsection: **Revision:**	806.03.01 General Requirements. Replace the second sentence of the paragraph with the following: Additionally, the material must have a minimum solubility of 99.0 percent when tested according to AASHTO T 44 and PG 76-22 must exhibit a minimum recovery of 60 percent, with a J_{NR} (nonrecoverable creep compliance) between 0.1 and 0.5, when tested according to AASHTO TP 70.

Supplemental Specifications to the
Standard Specifications for Road and Bridge Construction, 2012 Edition
Effective with the August 22, 2014 Letting

Subsection: **Table:** **Revision:**	806.03.01 General Requirements. PG Binder Requirements and Price Adjustment Schedule Replace the Elastic Recovery, % [3] (AASHTO T301) and all corresponding values in the table with the following: Test / Specification / 100% Pay / 90% Pay / 80% Pay / 70% Pay / 50%Pay[1] MSCR recovery, % [3] (AASHTO TP 70) / 60 Min. / ≥58 / 56 / 55 / 54 / <53
Subsection: **Table:** **Superscript:** **Revision:**	806.03.01 General Requirements. PG Binder Requirements and Price Adjustment Schedule (3) Replace [3] with the following: Perform testing at 64°C.
Subsection: **Revision:**	813.04 Gray Iron Castings. Replace the reference to "AASHTO M105" with "ASTM A48".
Subsection: **Number:** **Revision:**	813.09.02 High Strength Steel Bolts, Nuts, and Washers. A) Bolts. Delete first paragraph and "Hardness Number" Table. Replace with the following: A) Bolts. Conform to ASTM A325 (AASHTO M164) or ASTM A490 (AASHTO 253) as applicable.
Subsection: **Revision:**	814.04.02 Timber Guardrail Posts. Third paragraph, replace the reference to "AWPA C14" with "AWPA U1, Section B, Paragraph 4.1".
Subsection: **Revision:**	814.04.02 Timber Guardrail Posts. Replace the first sentence of the fourth paragraph with the following: Use any of the species of wood for round or square posts covered under AWPA U1.
Subsection: **Revision:**	814.04.02 Timber Guardrail Posts. Fourth paragraph, replace the reference to "AWPA C2" with "AWPA U1, Section B, Paragraph 4.1".
Subsection: **Revision:**	814.04.02 Timber Guardrail Posts. Delete the second sentence of the fourth paragraph.
Subsection: **Revision:**	814.05.02 Composite Plastic. 1) Add the following to the beginning of the first paragraph: Select composite offset blocks conforming to this section and assure blocks are from a manufacturer included on the Department's List of Approved Materials. 2) Delete the last paragraph of the subsection.
Subsection: **Revision:**	816.07.02 Wood Posts and Braces. First paragraph, replace the reference to "AWPA C5" with "AWPA U1, Section B, Paragraph 4.1".
Subsection: **Revision:**	816.07.02 Wood Posts and Braces. Delete the second sentence of the first paragraph.
Subsection: **Revision:**	818.07 Preservative Treatment. First paragraph, replace all references to "AWPA C14" with "AWPA U1, Section A".

Supplemental Specifications to the
Standard Specifications for Road and Bridge Construction, 2012 Edition
Effective with the August 22, 2014 Letting

Subsection: **Revision:**	834.14 Lighting Poles. Replace the first sentence with the following: Lighting pole design shall be in accordance with loading and allowable stress requirements of the AASHTO Standard Specifications for Structural Supports for Highway Signs, Luminaires, and Traffic Signals, 2013-6th Edition with current interims, with the exception of the following: The Cabinet will waive the requirement stated in the first sentence of Section 5.14.6.2 – Reinforced Holes and Cutouts for high mast poles (only). The minimum diameter at the base of the pole shall be 22 inches for high mast poles (only).
Subsection **Revision:**	834.14.03 High Mast Poles. Remove the second and fourth sentence from the first paragraph.
Subsection **Revision:**	834.14.03 High Mast Poles. Replace the third paragraph with the following: Provide calculations and drawings that are stamped by a Professional Engineer licensed in the Commonwealth of Kentucky.
Subsection: **Revision:**	834.14.03 High Mast Poles. Replace paragraph six with the following: Provide a pole section that conforms to ASTM A 595 grade A with a minimum yield strength of 55 KSI or ASTM A 572 with a minimum yield strength of 55 KSI. Use tubes that are round or 16 sided with a four inch corner radius, have a constant linear taper of .144 in/ft and contain only one longitudinal seam weld. Circumferential welded tube butt splices and laminated tubes are not permitted. Provide pole sections that are telescopically slip fit assembled in the field to facilitate inspection of interior surface welds and the protective coating. The minimum length of the telescopic slip splices shall be 1.5 times the inside diameter of the exposed end of the female section. Use longitudinal seam welds as commended in Section 5.15 of the AASHTO 2013 Specifications. The thickness of the transverse base shall not be less than 2 inches. Plates shall be integrally welded to the tubes with a telescopic welded joint or a full penetration groove weld with backup bar. The handhole cover shall be removable from the handhole frame. One the frame side opposite the hinge, provide a mechanism on the handhole cover/frame to place the Department's standard padlock as specified in Section 834.25. The handhole frame shall have two stainless studs installed opposite the hinge to secure the handhole cover to the frame which includes providing stainless steel wing nuts and washers. The handhole cover shall be manufactured from 0.25 inch thick galvanized steel (ASTM A 153) and have a neoprene rubber gasket that is permanently secured to the handhole frame to insure weather-tight protection. The hinge shall be manufactured from 7-guage stainless steel to provide adjustability to insure weather-tight fit for the cover. The minimum clear distance between the transverse plate and the bottom opening of the handhole shall not be less than the diameter of the bottom tube of the pole but needs to be at least 15 inches. Provide products that are hot-dip galvanized to the requirements of either ASTM A123 (fabricated products) or ASTM A 153 (hardware items).
Subsection: **Revision:**	834.16 ANCHOR BOLTS. Insert the following sentence at the beginning of the paragraph: The anchor bolt design shall follow the NCHRP Report 494 Section 2.4 and NCHRP 469 Appendix A Specifications.

Supplemental Specifications to the
Standard Specifications for Road and Bridge Construction, 2012 Edition
Effective with the August 22, 2014 Letting

Subsection: **Revision:**	834.17.01 Conventional. Add the following sentence after the second sentence: Provide a waterproof sticker mounted on the bottom of the housing that is legible from the ground and indicates the wattage of the fixture by providing the first two numbers of the wattage.
Subsection: **Revision:**	834.21.01 Waterproof Enclosures. Replace the last five sentences in the second paragraph with the following sentences: Provide a cabinet door with a louvered air vent, filter-retaining brackets and an easy to clean metal filter. Provide a cabinet door that is keyed with a factory installed standard no. 2 corbin traffic control key. Provide a light fixture with switch and bulb. Use a 120-volt fixture and utilize a L.E.D. bulb (equivalent to 60 watts minimum). Fixture shall be situated at or near the top of the cabinet and illuminate the contents of the cabinet. Provide a 120 VAC GFI duplex receptacle in the enclosure with a separate 20 amp breaker.
Subsection: **Revision:**	835.07 Traffic Poles. Replace the first sentence of the first paragraph with the following: Pole diameter and wall thickness shall be calculated in accordance with the AASHTO Standard Specifications for Structural Supports for Highway Signs, Luminaires, and Traffic Signals, 2013-6th Edition with current interims.
Subsection: **Revision:**	835.07 Traffic Poles. *Replace the first sentence of the fourth paragraph with the following: Ensure transverse plates have a thickness ≥ 2 inches. *Add the following sentence to the end of the fourth paragraph: The bottom pole diameter shall not be less than 16.25 inches.
Subsection: **Revision:**	835.07 Traffic Poles. Replace the third sentence of the fifth paragraph with the following: For anchor bolt design, pole forces shall be positioned in such a manner to maximize the force on any individual anchor bolt regardless of the actual anchor bolt orientation with the pole.
Subsection: **Revision:**	835.07 Traffic Poles. Replace the first and second sentence of the sixth paragraph with the following: The pole handhole shall be 25 inches by 6.5 inches. The handhole cover shall be removable from the handhole frame. On the frame side opposite the hinge, provide a mechanism on the handhole cover/frame to place the Department's standard padlock as specified in Section 834.25. The handhole frame shall have two stainless studs installed opposite the hinge to secure the handhole cover to the frame which includes providing stainless steel wing nuts and washers. The handhole cover shall be manufactured from 0.25 inch thick galvanized steel (ASTM 153) and have a neoprene rubber gasket that is permanently secured to the handhole frame to insure weather-tight protection. The hinge shall be manufactured from 7 gauge stainless steel to provide adjustability to insure a weather-tight fit for the cover. The minimum clear distance between the transverse plate and the bottom opening of the handhole shall not be less than the diameter of the bottom tube but needs to be at least 12 inches.

Supplemental Specifications to the Standard Specifications for Road and Bridge Construction, 2012 Edition Effective with the August 22, 2014 Letting

Subsection: **Revision:**	835.07 Traffic Poles. *Replace the first sentence of the last paragraph with the following: Provide calculations and drawings that are stamped by a Professional Engineer licensed in the Commonwealth of Kentucky. *Replace the third sentence of the last paragraph with the following: All tables referenced in 835.07 are found in the AASHTO Standard Specifications for Structural Supports for Highway Signs, Luminaires, and Traffic Signals, 2013-6th Edition with current interims.
Subsection: **Revision:**	835.07.01 Steel Strain Poles. Replace the second sentence of the second paragraph with the following: The detailed analysis shall be certified by a Professional Engineer licensed in the Commonwealth of Kentucky.
Subsection: **Revision:**	835.07.01 Steel Strain Poles. Replace number 7. after the second paragraph with the following: 7. Fatigue calculations should be shown for all fatigue related connections. Provide the corresponding detail, stress category and example from table 11.9.3.1-1.
Subsection: **Revision:**	835.07.02 Mast Arm Poles. Replace the second sentence of the fourth paragraph with the following: The detailed analysis shall be certified by a Professional Engineer licensed in the Commonwealth of Kentucky.
Subsection: **Revision:**	835.07.02 Mast Arm Poles. Replace number 7) after the fourth paragraph with the following: 7) Fatigue calculations should be shown for all fatigue related connections. Provide the corresponding detail, stress category and example from table 11.9.3.1-1.
Subsection: **Revision:**	835.07.03 Anchor Bolts. Add the following to the end of the paragraph: There shall be two steel templates (one can be used for the headed part of the anchor bolt when designed in this manner) provided per pole. Templates shall be contained within a 26.5 inch diameter. All templates shall be fully galvanized (ASTM A 153).
Subsection: **Revision:**	835.16.05 Optical Units. Replace the 3rd paragraph with the following: The list of certified products can be found on the following website: http://www.intertek.com.
Subsection: **Revision:**	835.19.01 Pedestrian Detector Body. Replace the first sentence with the following: Provide a four holed pole mounted aluminum rectangular housing that is compatible with the pedestrian detector.
Subsection: **Table:** **Revision:**	843.01.01 Geotextile Fabric. TYPE I FABRIC GEOTEXTILES FOR SLOPE PROTECTION AND CHANNEL LINING Add the following to the chart: Property — Minimum Value(1) — Test Method CBR Puncture (lbs) — 494 — ASTM D6241 Permittivity (1/s) — 0.7 — ASTM D4491

Supplemental Specifications to the Standard Specifications for Road and Bridge Construction, 2012 Edition Effective with the August 22, 2014 Letting

Subsection: 843.01.01 Geotextile Fabric.
Table: TYPE II FABRIC GEOTEXTILES FOR UNDERDRAINS
Revision: Add the following to the chart:

Property	Minimum Value[1]	Test Method
CBR Puncture (lbs)	210	ASTM D6241
Permittivity (1/s)	0.5	ASTM D4491

Subsection: 843.01.01 Geotextile Fabric.
Table: TYPE III FABRIC GEOTEXTILES FOR SUBGRADE OR EMBANKMENT STABILIZATION
Revision: Add the following to the chart:

Property	Minimum Value[1]	Test Method
CBR Puncture (lbs)	370	ASTM D6241
Permittivity (1/s)	0.05	ASTM D4491

Subsection: 843.01.01 Geotextile Fabric.
Table: TYPE IV FABRIC GEOTEXTILES FOR EMBANKMENT DRAINAGE BLANKETS AND PAVEMENT EDGE DRAINS
Revision: Add the following to the chart:

Property	Minimum Value[1]	Test Method
CBR Puncture (lbs)	309	ASTM D6241
Permittivity (1/s)	0.5	ASTM D4491

Subsection: 843.01.01 Geotextile Fabric.
Table: TYPE V HIGH STRENGTH GEOTEXTILE FABRIC
Revision: Make the following changes to the chart:

Property	Minimum Value[1]	Test Method
CBR Puncture (lbs)	618	ASTM D6241
Grab Strength (lbs)	700	ASTM D4632
Apparent Opening Size	U.S. #40[3]	ASTM D4751

[3] Maximum average roll value.

PART III

EMPLOYMENT, WAGE AND RECORD REQUIREMENTS

FHWA-1273 -- Revised May 1, 2012

REQUIRED CONTRACT PROVISIONS
FEDERAL-AID CONSTRUCTION CONTRACTS

I. General
II. Nondiscrimination
III. Nonsegregated Facilities
IV. Davis-Bacon and Related Act Provisions
V. Contract Work Hours and Safety Standards Act Provisions
VI. Subletting or Assigning the Contract
VII. Safety: Accident Prevention
VIII. False Statements Concerning Highway Projects
IX. Implementation of Clean Air Act and Federal Water Pollution Control Act
X. Compliance with Governmentwide Suspension and Debarment Requirements
XI. Certification Regarding Use of Contract Funds for Lobbying

ATTACHMENTS

A. Employment and Materials Preference for Appalachian Development Highway System or Appalachian Local Access Road Contracts (included in Appalachian contracts only)

I. GENERAL

1. Form FHWA-1273 must be physically incorporated in each construction contract funded under Title 23 (excluding emergency contracts solely intended for debris removal). The contractor (or subcontractor) must insert this form in each subcontract and further require its inclusion in all lower tier subcontracts (excluding purchase orders, rental agreements and other agreements for supplies or services).

The applicable requirements of Form FHWA-1273 are incorporated by reference for work done under any purchase order, rental agreement or agreement for other services. The prime contractor shall be responsible for compliance by any subcontractor, lower-tier subcontractor or service provider.

Form FHWA-1273 must be included in all Federal-aid design-build contracts, in all subcontracts and in lower tier subcontracts (excluding subcontracts for design services, purchase orders, rental agreements and other agreements for supplies or services). The design-builder shall be responsible for compliance by any subcontractor, lower-tier subcontractor or service provider.

Contracting agencies may reference Form FHWA-1273 in bid proposal or request for proposal documents, however, the Form FHWA-1273 must be physically incorporated (not referenced) in all contracts, subcontracts and lower-tier subcontracts (excluding purchase orders, rental agreements and other agreements for supplies or services related to a construction contract).

2. Subject to the applicability criteria noted in the following sections, these contract provisions shall apply to all work performed on the contract by the contractor's own organization and with the assistance of workers under the contractor's immediate superintendence and to all work performed on the contract by piecework, station work, or by subcontract.

3. A breach of any of the stipulations contained in these Required Contract Provisions may be sufficient grounds for withholding of progress payments, withholding of final payment, termination of the contract, suspension / debarment or any other action determined to be appropriate by the contracting agency and FHWA.

4. Selection of Labor: During the performance of this contract, the contractor shall not use convict labor for any purpose within the limits of a construction project on a Federal-aid highway unless it is labor performed by convicts who are on parole, supervised release, or probation. The term Federal-aid highway does not include roadways functionally classified as local roads or rural minor collectors.

II. NONDISCRIMINATION

The provisions of this section related to 23 CFR Part 230 are applicable to all Federal-aid construction contracts and to all related construction subcontracts of $10,000 or more. The provisions of 23 CFR Part 230 are not applicable to material supply, engineering, or architectural service contracts.

In addition, the contractor and all subcontractors must comply with the following policies: Executive Order 11246, 41 CFR 60, 29 CFR 1625-1627, Title 23 USC Section 140, the Rehabilitation Act of 1973, as amended (29 USC 794), Title VI of the Civil Rights Act of 1964, as amended, and related regulations including 49 CFR Parts 21, 26 and 27; and 23 CFR Parts 200, 230, and 633.

The contractor and all subcontractors must comply with: the requirements of the Equal Opportunity Clause in 41 CFR 60-1.4(b) and, for all construction contracts exceeding $10,000, the Standard Federal Equal Employment Opportunity Construction Contract Specifications in 41 CFR 60-4.3.

Note: The U.S. Department of Labor has exclusive authority to determine compliance with Executive Order 11246 and the policies of the Secretary of Labor including 41 CFR 60, and 29 CFR 1625-1627. The contracting agency and the FHWA have the authority and the responsibility to ensure compliance with Title 23 USC Section 140, the Rehabilitation Act of 1973, as amended (29 USC 794), and Title VI of the Civil Rights Act of 1964, as amended, and related regulations including 49 CFR Parts 21, 26 and 27; and 23 CFR Parts 200, 230, and 633.

The following provision is adopted from 23 CFR 230, Appendix A, with appropriate revisions to conform to the U.S. Department of Labor (US DOL) and FHWA requirements.

1. Equal Employment Opportunity: Equal employment opportunity (EEO) requirements not to discriminate and to take affirmative action to assure equal opportunity as set forth under laws, executive orders, rules, regulations (28 CFR 35, 29 CFR 1630, 29 CFR 1625-1627, 41 CFR 60 and 49 CFR 27) and orders of the Secretary of Labor as modified by the provisions prescribed herein, and imposed pursuant to 23 U.S.C. 140 shall constitute the EEO and specific affirmative action standards for the contractor's project activities under

this contract. The provisions of the Americans with Disabilities Act of 1990 (42 U.S.C. 12101 et seq.) set forth under 28 CFR 35 and 29 CFR 1630 are incorporated by reference in this contract. In the execution of this contract, the contractor agrees to comply with the following minimum specific requirement activities of EEO:

a. The contractor will work with the contracting agency and the Federal Government to ensure that it has made every good faith effort to provide equal opportunity with respect to all of its terms and conditions of employment and in their review of activities under the contract.

b. The contractor will accept as its operating policy the following statement:

"It is the policy of this Company to assure that applicants are employed, and that employees are treated during employment, without regard to their race, religion, sex, color, national origin, age or disability. Such action shall include: employment, upgrading, demotion, or transfer; recruitment or recruitment advertising; layoff or termination; rates of pay or other forms of compensation; and selection for training, including apprenticeship, pre-apprenticeship, and/or on-the-job training."

2. EEO Officer: The contractor will designate and make known to the contracting officers an EEO Officer who will have the responsibility for and must be capable of effectively administering and promoting an active EEO program and who must be assigned adequate authority and responsibility to do so.

3. Dissemination of Policy: All members of the contractor's staff who are authorized to hire, supervise, promote, and discharge employees, or who recommend such action, or who are substantially involved in such action, will be made fully cognizant of, and will implement, the contractor's EEO policy and contractual responsibilities to provide EEO in each grade and classification of employment. To ensure that the above agreement will be met, the following actions will be taken as a minimum:

a. Periodic meetings of supervisory and personnel office employees will be conducted before the start of work and then not less often than once every six months, at which time the contractor's EEO policy and its implementation will be reviewed and explained. The meetings will be conducted by the EEO Officer.

b. All new supervisory or personnel office employees will be given a thorough indoctrination by the EEO Officer, covering all major aspects of the contractor's EEO obligations within thirty days following their reporting for duty with the contractor.

c. All personnel who are engaged in direct recruitment for the project will be instructed by the EEO Officer in the contractor's procedures for locating and hiring minorities and women.

d. Notices and posters setting forth the contractor's EEO policy will be placed in areas readily accessible to employees, applicants for employment and potential employees.

e. The contractor's EEO policy and the procedures to implement such policy will be brought to the attention of employees by means of meetings, employee handbooks, or other appropriate means.

4. Recruitment: When advertising for employees, the contractor will include in all advertisements for employees the notation: "An Equal Opportunity Employer." All such advertisements will be placed in publications having a large circulation among minorities and women in the area from which the project work force would normally be derived.

a. The contractor will, unless precluded by a valid bargaining agreement, conduct systematic and direct recruitment through public and private employee referral sources likely to yield qualified minorities and women. To meet this requirement, the contractor will identify sources of potential minority group employees, and establish with such identified sources procedures whereby minority and women applicants may be referred to the contractor for employment consideration.

b. In the event the contractor has a valid bargaining agreement providing for exclusive hiring hall referrals, the contractor is expected to observe the provisions of that agreement to the extent that the system meets the contractor's compliance with EEO contract provisions. Where implementation of such an agreement has the effect of discriminating against minorities or women, or obligates the contractor to do the same, such implementation violates Federal nondiscrimination provisions.

c. The contractor will encourage its present employees to refer minorities and women as applicants for employment. Information and procedures with regard to referring such applicants will be discussed with employees.

5. Personnel Actions: Wages, working conditions, and employee benefits shall be established and administered, and personnel actions of every type, including hiring, upgrading, promotion, transfer, demotion, layoff, and termination, shall be taken without regard to race, color, religion, sex, national origin, age or disability. The following procedures shall be followed:

a. The contractor will conduct periodic inspections of project sites to insure that working conditions and employee facilities do not indicate discriminatory treatment of project site personnel.

b. The contractor will periodically evaluate the spread of wages paid within each classification to determine any evidence of discriminatory wage practices.

c. The contractor will periodically review selected personnel actions in depth to determine whether there is evidence of discrimination. Where evidence is found, the contractor will promptly take corrective action. If the review indicates that the discrimination may extend beyond the actions reviewed, such corrective action shall include all affected persons.

d. The contractor will promptly investigate all complaints of alleged discrimination made to the contractor in connection with its obligations under this contract, will attempt to resolve such complaints, and will take appropriate corrective action within a reasonable time. If the investigation indicates that the discrimination may affect persons other than the complainant, such corrective action shall include such other persons. Upon completion of each investigation, the contractor will inform every complainant of all of their avenues of appeal.

6. Training and Promotion:

a. The contractor will assist in locating, qualifying, and increasing the skills of minorities and women who are

applicants for employment or current employees. Such efforts should be aimed at developing full journey level status employees in the type of trade or job classification involved.

b. Consistent with the contractor's work force requirements and as permissible under Federal and State regulations, the contractor shall make full use of training programs, i.e., apprenticeship, and on-the-job training programs for the geographical area of contract performance. In the event a special provision for training is provided under this contract, this subparagraph will be superseded as indicated in the special provision. The contracting agency may reserve training positions for persons who receive welfare assistance in accordance with 23 U.S.C. 140(a).

c. The contractor will advise employees and applicants for employment of available training programs and entrance requirements for each.

d. The contractor will periodically review the training and promotion potential of employees who are minorities and women and will encourage eligible employees to apply for such training and promotion.

7. Unions: If the contractor relies in whole or in part upon unions as a source of employees, the contractor will use good faith efforts to obtain the cooperation of such unions to increase opportunities for minorities and women. Actions by the contractor, either directly or through a contractor's association acting as agent, will include the procedures set forth below:

a. The contractor will use good faith efforts to develop, in cooperation with the unions, joint training programs aimed toward qualifying more minorities and women for membership in the unions and increasing the skills of minorities and women so that they may qualify for higher paying employment.

b. The contractor will use good faith efforts to incorporate an EEO clause into each union agreement to the end that such union will be contractually bound to refer applicants without regard to their race, color, religion, sex, national origin, age or disability.

c. The contractor is to obtain information as to the referral practices and policies of the labor union except that to the extent such information is within the exclusive possession of the labor union and such labor union refuses to furnish such information to the contractor, the contractor shall so certify to the contracting agency and shall set forth what efforts have been made to obtain such information.

d. In the event the union is unable to provide the contractor with a reasonable flow of referrals within the time limit set forth in the collective bargaining agreement, the contractor will, through independent recruitment efforts, fill the employment vacancies without regard to race, color, religion, sex, national origin, age or disability; making full efforts to obtain qualified and/or qualifiable minorities and women. The failure of a union to provide sufficient referrals (even though it is obligated to provide exclusive referrals under the terms of a collective bargaining agreement) does not relieve the contractor from the requirements of this paragraph. In the event the union referral practice prevents the contractor from meeting the obligations pursuant to Executive Order 11246, as amended, and these special provisions, such contractor shall immediately notify the contracting agency.

8. Reasonable Accommodation for Applicants / Employees with Disabilities: The contractor must be familiar with the requirements for and comply with the Americans with Disabilities Act and all rules and regulations established there under. Employers must provide reasonable accommodation in all employment activities unless to do so would cause an undue hardship.

9. Selection of Subcontractors, Procurement of Materials and Leasing of Equipment: The contractor shall not discriminate on the grounds of race, color, religion, sex, national origin, age or disability in the selection and retention of subcontractors, including procurement of materials and leases of equipment. The contractor shall take all necessary and reasonable steps to ensure nondiscrimination in the administration of this contract.

a. The contractor shall notify all potential subcontractors and suppliers and lessors of their EEO obligations under this contract.

b. The contractor will use good faith efforts to ensure subcontractor compliance with their EEO obligations.

10. Assurance Required by 49 CFR 26.13(b):

a. The requirements of 49 CFR Part 26 and the State DOT's U.S. DOT-approved DBE program are incorporated by reference.

b. The contractor or subcontractor shall not discriminate on the basis of race, color, national origin, or sex in the performance of this contract. The contractor shall carry out applicable requirements of 49 CFR Part 26 in the award and administration of DOT-assisted contracts. Failure by the contractor to carry out these requirements is a material breach of this contract, which may result in the termination of this contract or such other remedy as the contracting agency deems appropriate.

11. Records and Reports: The contractor shall keep such records as necessary to document compliance with the EEO requirements. Such records shall be retained for a period of three years following the date of the final payment to the contractor for all contract work and shall be available at reasonable times and places for inspection by authorized representatives of the contracting agency and the FHWA.

a. The records kept by the contractor shall document the following:

(1) The number and work hours of minority and non-minority group members and women employed in each work classification on the project;

(2) The progress and efforts being made in cooperation with unions, when applicable, to increase employment opportunities for minorities and women; and

(3) The progress and efforts being made in locating, hiring, training, qualifying, and upgrading minorities and women;

b. The contractors and subcontractors will submit an annual report to the contracting agency each July for the duration of the project, indicating the number of minority, women, and non-minority group employees currently engaged in each work classification required by the contract work. This information is to be reported on Form FHWA-1391. The staffing data should represent the project work force on board in all or any part of the last payroll period preceding the end of July. If on-the-job training is being required by special provision, the contractor

will be required to collect and report training data. The employment data should reflect the work force on board during all or any part of the last payroll period preceding the end of July.

III. NONSEGREGATED FACILITIES

This provision is applicable to all Federal-aid construction contracts and to all related construction subcontracts of $10,000 or more.

The contractor must ensure that facilities provided for employees are provided in such a manner that segregation on the basis of race, color, religion, sex, or national origin cannot result. The contractor may neither require such segregated use by written or oral policies nor tolerate such use by employee custom. The contractor's obligation extends further to ensure that its employees are not assigned to perform their services at any location, under the contractor's control, where the facilities are segregated. The term "facilities" includes waiting rooms, work areas, restaurants and other eating areas, time clocks, restrooms, washrooms, locker rooms, and other storage or dressing areas, parking lots, drinking fountains, recreation or entertainment areas, transportation, and housing provided for employees. The contractor shall provide separate or single-user restrooms and necessary dressing or sleeping areas to assure privacy between sexes.

IV. DAVIS-BACON AND RELATED ACT PROVISIONS

This section is applicable to all Federal-aid construction projects exceeding $2,000 and to all related subcontracts and lower-tier subcontracts (regardless of subcontract size). The requirements apply to all projects located within the right-of-way of a roadway that is functionally classified as Federal-aid highway. This excludes roadways functionally classified as local roads or rural minor collectors, which are exempt. Contracting agencies may elect to apply these requirements to other projects.

The following provisions are from the U.S. Department of Labor regulations in 29 CFR 5.5 “Contract provisions and related matters” with minor revisions to conform to the FHWA-1273 format and FHWA program requirements.

1. Minimum wages

a. All laborers and mechanics employed or working upon the site of the work, will be paid unconditionally and not less often than once a week, and without subsequent deduction or rebate on any account (except such payroll deductions as are permitted by regulations issued by the Secretary of Labor under the Copeland Act (29 CFR part 3)), the full amount of wages and bona fide fringe benefits (or cash equivalents thereof) due at time of payment computed at rates not less than those contained in the wage determination of the Secretary of Labor which is attached hereto and made a part hereof, regardless of any contractual relationship which may be alleged to exist between the contractor and such laborers and mechanics.

Contributions made or costs reasonably anticipated for bona fide fringe benefits under section 1(b)(2) of the Davis-Bacon Act on behalf of laborers or mechanics are considered wages paid to such laborers or mechanics, subject to the provisions of paragraph 1.d. of this section; also, regular contributions made or costs incurred for more than a weekly period (but not less often than quarterly) under plans, funds, or programs which cover the particular weekly period, are deemed to be constructively made or incurred during such weekly period. Such laborers and mechanics shall be paid the appropriate wage rate and fringe benefits on the wage determination for the classification of work actually performed, without regard to skill, except as provided in 29 CFR 5.5(a)(4). Laborers or mechanics performing work in more than one classification may be compensated at the rate specified for each classification for the time actually worked therein: Provided, That the employer's payroll records accurately set forth the time spent in each classification in which work is performed. The wage determination (including any additional classification and wage rates conformed under paragraph 1.b. of this section) and the Davis-Bacon poster (WH–1321) shall be posted at all times by the contractor and its subcontractors at the site of the work in a prominent and accessible place where it can be easily seen by the workers.

b.(1) The contracting officer shall require that any class of laborers or mechanics, including helpers, which is not listed in the wage determination and which is to be employed under the contract shall be classified in conformance with the wage determination. The contracting officer shall approve an additional classification and wage rate and fringe benefits therefore only when the following criteria have been met:

(i) The work to be performed by the classification requested is not performed by a classification in the wage determination; and

(ii) The classification is utilized in the area by the construction industry; and

(iii) The proposed wage rate, including any bona fide fringe benefits, bears a reasonable relationship to the wage rates contained in the wage determination.

(2) If the contractor and the laborers and mechanics to be employed in the classification (if known), or their representatives, and the contracting officer agree on the classification and wage rate (including the amount designated for fringe benefits where appropriate), a report of the action taken shall be sent by the contracting officer to the Administrator of the Wage and Hour Division, Employment Standards Administration, U.S. Department of Labor, Washington, DC 20210. The Administrator, or an authorized representative, will approve, modify, or disapprove every additional classification action within 30 days of receipt and so advise the contracting officer or will notify the contracting officer within the 30-day period that additional time is necessary.

(3) In the event the contractor, the laborers or mechanics to be employed in the classification or their representatives, and the contracting officer do not agree on the proposed classification and wage rate (including the amount designated for fringe benefits, where appropriate), the contracting officer shall refer the questions, including the views of all interested parties and the recommendation of the contracting officer, to the Wage and Hour Administrator for determination. The Wage and Hour Administrator, or an authorized representative, will issue a determination within 30 days of receipt and so advise the contracting officer or

will notify the contracting officer within the 30-day period that additional time is necessary.

(4) The wage rate (including fringe benefits where appropriate) determined pursuant to paragraphs 1.b.(2) or 1.b.(3) of this section, shall be paid to all workers performing work in the classification under this contract from the first day on which work is performed in the classification.

c. Whenever the minimum wage rate prescribed in the contract for a class of laborers or mechanics includes a fringe benefit which is not expressed as an hourly rate, the contractor shall either pay the benefit as stated in the wage determination or shall pay another bona fide fringe benefit or an hourly cash equivalent thereof.

d. If the contractor does not make payments to a trustee or other third person, the contractor may consider as part of the wages of any laborer or mechanic the amount of any costs reasonably anticipated in providing bona fide fringe benefits under a plan or program, Provided, That the Secretary of Labor has found, upon the written request of the contractor, that the applicable standards of the Davis-Bacon Act have been met. The Secretary of Labor may require the contractor to set aside in a separate account assets for the meeting of obligations under the plan or program.

2. Withholding

The contracting agency shall upon its own action or upon written request of an authorized representative of the Department of Labor, withhold or cause to be withheld from the contractor under this contract, or any other Federal contract with the same prime contractor, or any other federally-assisted contract subject to Davis-Bacon prevailing wage requirements, which is held by the same prime contractor, so much of the accrued payments or advances as may be considered necessary to pay laborers and mechanics, including apprentices, trainees, and helpers, employed by the contractor or any subcontractor the full amount of wages required by the contract. In the event of failure to pay any laborer or mechanic, including any apprentice, trainee, or helper, employed or working on the site of the work, all or part of the wages required by the contract, the contracting agency may, after written notice to the contractor, take such action as may be necessary to cause the suspension of any further payment, advance, or guarantee of funds until such violations have ceased.

3. Payrolls and basic records

a. Payrolls and basic records relating thereto shall be maintained by the contractor during the course of the work and preserved for a period of three years thereafter for all laborers and mechanics working at the site of the work. Such records shall contain the name, address, and social security number of each such worker, his or her correct classification, hourly rates of wages paid (including rates of contributions or costs anticipated for bona fide fringe benefits or cash equivalents thereof of the types described in section 1(b)(2)(B) of the Davis-Bacon Act), daily and weekly number of hours worked, deductions made and actual wages paid. Whenever the Secretary of Labor has found under 29 CFR 5.5(a)(1)(iv) that the wages of any laborer or mechanic include the amount of any costs reasonably anticipated in providing benefits under a plan or program described in section 1(b)(2)(B) of the Davis-Bacon Act, the contractor shall maintain records which show that the commitment to provide such benefits is enforceable, that the plan or program is financially responsible, and that the plan or program has been communicated in writing to the laborers or mechanics affected, and records which show the costs anticipated or the actual cost incurred in providing such benefits. Contractors employing apprentices or trainees under approved programs shall maintain written evidence of the registration of apprenticeship programs and certification of trainee programs, the registration of the apprentices and trainees, and the ratios and wage rates prescribed in the applicable programs.

b.(1) The contractor shall submit weekly for each week in which any contract work is performed a copy of all payrolls to the contracting agency. The payrolls submitted shall set out accurately and completely all of the information required to be maintained under 29 CFR 5.5(a)(3)(i), except that full social security numbers and home addresses shall not be included on weekly transmittals. Instead the payrolls shall only need to include an individually identifying number for each employee (e.g. , the last four digits of the employee's social security number). The required weekly payroll information may be submitted in any form desired. Optional Form WH–347 is available for this purpose from the Wage and Hour Division Web site at http://www.dol.gov/esa/whd/forms/wh347instr.htm or its successor site. The prime contractor is responsible for the submission of copies of payrolls by all subcontractors. Contractors and subcontractors shall maintain the full social security number and current address of each covered worker, and shall provide them upon request to the contracting agency for transmission to the State DOT, the FHWA or the Wage and Hour Division of the Department of Labor for purposes of an investigation or audit of compliance with prevailing wage requirements. It is not a violation of this section for a prime contractor to require a subcontractor to provide addresses and social security numbers to the prime contractor for its own records, without weekly submission to the contracting agency..

(2) Each payroll submitted shall be accompanied by a “Statement of Compliance,” signed by the contractor or subcontractor or his or her agent who pays or supervises the payment of the persons employed under the contract and shall certify the following:

(i) That the payroll for the payroll period contains the information required to be provided under §5.5 (a)(3)(ii) of Regulations, 29 CFR part 5, the appropriate information is being maintained under §5.5 (a)(3)(i) of Regulations, 29 CFR part 5, and that such information is correct and complete;

(ii) That each laborer or mechanic (including each helper, apprentice, and trainee) employed on the contract during the payroll period has been paid the full weekly wages earned, without rebate, either directly or indirectly, and that no deductions have been made either directly or indirectly from the full wages earned, other than permissible deductions as set forth in Regulations, 29 CFR part 3;

(iii) That each laborer or mechanic has been paid not less than the applicable wage rates and fringe benefits or cash equivalents for the classification of work performed, as specified in the applicable wage determination incorporated into the contract.

(3) The weekly submission of a properly executed certification set forth on the reverse side of Optional Form WH–347 shall satisfy the requirement for submission of the "Statement of Compliance" required by paragraph 3.b.(2) of this section.

(4) The falsification of any of the above certifications may subject the contractor or subcontractor to civil or criminal prosecution under section 1001 of title 18 and section 231 of title 31 of the United States Code.

c. The contractor or subcontractor shall make the records required under paragraph 3.a. of this section available for inspection, copying, or transcription by authorized representatives of the contracting agency, the State DOT, the FHWA, or the Department of Labor, and shall permit such representatives to interview employees during working hours on the job. If the contractor or subcontractor fails to submit the required records or to make them available, the FHWA may, after written notice to the contractor, the contracting agency or the State DOT, take such action as may be necessary to cause the suspension of any further payment, advance, or guarantee of funds. Furthermore, failure to submit the required records upon request or to make such records available may be grounds for debarment action pursuant to 29 CFR 5.12.

4. Apprentices and trainees

a. Apprentices (programs of the USDOL).

Apprentices will be permitted to work at less than the predetermined rate for the work they performed when they are employed pursuant to and individually registered in a bona fide apprenticeship program registered with the U.S. Department of Labor, Employment and Training Administration, Office of Apprenticeship Training, Employer and Labor Services, or with a State Apprenticeship Agency recognized by the Office, or if a person is employed in his or her first 90 days of probationary employment as an apprentice in such an apprenticeship program, who is not individually registered in the program, but who has been certified by the Office of Apprenticeship Training, Employer and Labor Services or a State Apprenticeship Agency (where appropriate) to be eligible for probationary employment as an apprentice.

The allowable ratio of apprentices to journeymen on the job site in any craft classification shall not be greater than the ratio permitted to the contractor as to the entire work force under the registered program. Any worker listed on a payroll at an apprentice wage rate, who is not registered or otherwise employed as stated above, shall be paid not less than the applicable wage rate on the wage determination for the classification of work actually performed. In addition, any apprentice performing work on the job site in excess of the ratio permitted under the registered program shall be paid not less than the applicable wage rate on the wage determination for the work actually performed. Where a contractor is performing construction on a project in a locality other than that in which its program is registered, the ratios and wage rates (expressed in percentages of the journeyman's hourly rate) specified in the contractor's or subcontractor's registered program shall be observed.

Every apprentice must be paid at not less than the rate specified in the registered program for the apprentice's level of progress, expressed as a percentage of the journeymen hourly rate specified in the applicable wage determination. Apprentices shall be paid fringe benefits in accordance with the provisions of the apprenticeship program. If the apprenticeship program does not specify fringe benefits, apprentices must be paid the full amount of fringe benefits listed on the wage determination for the applicable classification. If the Administrator determines that a different practice prevails for the applicable apprentice classification, fringes shall be paid in accordance with that determination.

In the event the Office of Apprenticeship Training, Employer and Labor Services, or a State Apprenticeship Agency recognized by the Office, withdraws approval of an apprenticeship program, the contractor will no longer be permitted to utilize apprentices at less than the applicable predetermined rate for the work performed until an acceptable program is approved.

b. Trainees (programs of the USDOL).

Except as provided in 29 CFR 5.16, trainees will not be permitted to work at less than the predetermined rate for the work performed unless they are employed pursuant to and individually registered in a program which has received prior approval, evidenced by formal certification by the U.S. Department of Labor, Employment and Training Administration.

The ratio of trainees to journeymen on the job site shall not be greater than permitted under the plan approved by the Employment and Training Administration.

Every trainee must be paid at not less than the rate specified in the approved program for the trainee's level of progress, expressed as a percentage of the journeyman hourly rate specified in the applicable wage determination. Trainees shall be paid fringe benefits in accordance with the provisions of the trainee program. If the trainee program does not mention fringe benefits, trainees shall be paid the full amount of fringe benefits listed on the wage determination unless the Administrator of the Wage and Hour Division determines that there is an apprenticeship program associated with the corresponding journeyman wage rate on the wage determination which provides for less than full fringe benefits for apprentices. Any employee listed on the payroll at a trainee rate who is not registered and participating in a training plan approved by the Employment and Training Administration shall be paid not less than the applicable wage rate on the wage determination for the classification of work actually performed. In addition, any trainee performing work on the job site in excess of the ratio permitted under the registered program shall be paid not less than the applicable wage rate on the wage determination for the work actually performed.

In the event the Employment and Training Administration withdraws approval of a training program, the contractor will no longer be permitted to utilize trainees at less than the applicable predetermined rate for the work performed until an acceptable program is approved.

c. Equal employment opportunity. The utilization of apprentices, trainees and journeymen under this part shall be in conformity with the equal employment opportunity requirements of Executive Order 11246, as amended, and 29 CFR part 30.

d. Apprentices and Trainees (programs of the U.S. DOT).

Apprentices and trainees working under apprenticeship and skill training programs which have been certified by the Secretary of Transportation as promoting EEO in connection with Federal-aid highway construction programs are not subject to the requirements of paragraph 4 of this Section IV. The straight time hourly wage rates for apprentices and trainees under such programs will be established by the particular programs. The ratio of apprentices and trainees to journeymen shall not be greater than permitted by the terms of the particular program.

5. Compliance with Copeland Act requirements. The contractor shall comply with the requirements of 29 CFR part 3, which are incorporated by reference in this contract.

6. Subcontracts. The contractor or subcontractor shall insert Form FHWA-1273 in any subcontracts and also require the subcontractors to include Form FHWA-1273 in any lower tier subcontracts. The prime contractor shall be responsible for the compliance by any subcontractor or lower tier subcontractor with all the contract clauses in 29 CFR 5.5.

7. Contract termination: debarment. A breach of the contract clauses in 29 CFR 5.5 may be grounds for termination of the contract, and for debarment as a contractor and a subcontractor as provided in 29 CFR 5.12.

8. Compliance with Davis-Bacon and Related Act requirements. All rulings and interpretations of the Davis-Bacon and Related Acts contained in 29 CFR parts 1, 3, and 5 are herein incorporated by reference in this contract.

9. Disputes concerning labor standards. Disputes arising out of the labor standards provisions of this contract shall not be subject to the general disputes clause of this contract. Such disputes shall be resolved in accordance with the procedures of the Department of Labor set forth in 29 CFR parts 5, 6, and 7. Disputes within the meaning of this clause include disputes between the contractor (or any of its subcontractors) and the contracting agency, the U.S. Department of Labor, or the employees or their representatives.

10. Certification of eligibility.

a. By entering into this contract, the contractor certifies that neither it (nor he or she) nor any person or firm who has an interest in the contractor's firm is a person or firm ineligible to be awarded Government contracts by virtue of section 3(a) of the Davis-Bacon Act or 29 CFR 5.12(a)(1).

b. No part of this contract shall be subcontracted to any person or firm ineligible for award of a Government contract by virtue of section 3(a) of the Davis-Bacon Act or 29 CFR 5.12(a)(1).

c. The penalty for making false statements is prescribed in the U.S. Criminal Code, 18 U.S.C. 1001.

V. CONTRACT WORK HOURS AND SAFETY STANDARDS ACT

The following clauses apply to any Federal-aid construction contract in an amount in excess of $100,000 and subject to the overtime provisions of the Contract Work Hours and Safety Standards Act. These clauses shall be inserted in addition to the clauses required by 29 CFR 5.5(a) or 29 CFR 4.6. As used in this paragraph, the terms laborers and mechanics include watchmen and guards.

1. Overtime requirements. No contractor or subcontractor contracting for any part of the contract work which may require or involve the employment of laborers or mechanics shall require or permit any such laborer or mechanic in any workweek in which he or she is employed on such work to work in excess of forty hours in such workweek unless such laborer or mechanic receives compensation at a rate not less than one and one-half times the basic rate of pay for all hours worked in excess of forty hours in such workweek.

2. Violation; liability for unpaid wages; liquidated damages. In the event of any violation of the clause set forth in paragraph (1.) of this section, the contractor and any subcontractor responsible therefor shall be liable for the unpaid wages. In addition, such contractor and subcontractor shall be liable to the United States (in the case of work done under contract for the District of Columbia or a territory, to such District or to such territory), for liquidated damages. Such liquidated damages shall be computed with respect to each individual laborer or mechanic, including watchmen and guards, employed in violation of the clause set forth in paragraph (1.) of this section, in the sum of $10 for each calendar day on which such individual was required or permitted to work in excess of the standard workweek of forty hours without payment of the overtime wages required by the clause set forth in paragraph (1.) of this section.

3. Withholding for unpaid wages and liquidated damages. The FHWA or the contacting agency shall upon its own action or upon written request of an authorized representative of the Department of Labor withhold or cause to be withheld, from any moneys payable on account of work performed by the contractor or subcontractor under any such contract or any other Federal contract with the same prime contractor, or any other federally-assisted contract subject to the Contract Work Hours and Safety Standards Act, which is held by the same prime contractor, such sums as may be determined to be necessary to satisfy any liabilities of such contractor or subcontractor for unpaid wages and liquidated damages as provided in the clause set forth in paragraph (2.) of this section.

4. Subcontracts. The contractor or subcontractor shall insert in any subcontracts the clauses set forth in paragraph (1.) through (4.) of this section and also a clause requiring the subcontractors to include these clauses in any lower tier subcontracts. The prime contractor shall be responsible for compliance by any subcontractor or lower tier subcontractor with the clauses set forth in paragraphs (1.) through (4.) of this section.

VI. SUBLETTING OR ASSIGNING THE CONTRACT

This provision is applicable to all Federal-aid construction contracts on the National Highway System.

1. The contractor shall perform with its own organization contract work amounting to not less than 30 percent (or a greater percentage if specified elsewhere in the contract) of the total original contract price, excluding any specialty items designated by the contracting agency. Specialty items may be performed by subcontract and the amount of any such specialty items performed may be deducted from the total original contract price before computing the amount of work required to be performed by the contractor's own organization (23 CFR 635.116).

a. The term “perform work with its own organization” refers to workers employed or leased by the prime contractor, and equipment owned or rented by the prime contractor, with or without operators. Such term does not include employees or equipment of a subcontractor or lower tier subcontractor, agents of the prime contractor, or any other assignees. The term may include payments for the costs of hiring leased employees from an employee leasing firm meeting all relevant Federal and State regulatory requirements. Leased employees may only be included in this term if the prime contractor meets all of the following conditions:

(1) the prime contractor maintains control over the supervision of the day-to-day activities of the leased employees;
(2) the prime contractor remains responsible for the quality of the work of the leased employees;
(3) the prime contractor retains all power to accept or exclude individual employees from work on the project; and
(4) the prime contractor remains ultimately responsible for the payment of predetermined minimum wages, the submission of payrolls, statements of compliance and all other Federal regulatory requirements.

b. "Specialty Items" shall be construed to be limited to work that requires highly specialized knowledge, abilities, or equipment not ordinarily available in the type of contracting organizations qualified and expected to bid or propose on the contract as a whole and in general are to be limited to minor components of the overall contract.

2. The contract amount upon which the requirements set forth in paragraph (1) of Section VI is computed includes the cost of material and manufactured products which are to be purchased or produced by the contractor under the contract provisions.

3. The contractor shall furnish (a) a competent superintendent or supervisor who is employed by the firm, has full authority to direct performance of the work in accordance with the contract requirements, and is in charge of all construction operations (regardless of who performs the work) and (b) such other of its own organizational resources (supervision, management, and engineering services) as the contracting officer determines is necessary to assure the performance of the contract.

4. No portion of the contract shall be sublet, assigned or otherwise disposed of except with the written consent of the contracting officer, or authorized representative, and such consent when given shall not be construed to relieve the contractor of any responsibility for the fulfillment of the contract. Written consent will be given only after the contracting agency has assured that each subcontract is evidenced in writing and that it contains all pertinent provisions and requirements of the prime contract.

5. The 30% self-performance requirement of paragraph (1) is not applicable to design-build contracts; however, contracting agencies may establish their own self-performance requirements.

VII. SAFETY: ACCIDENT PREVENTION

This provision is applicable to all Federal-aid construction contracts and to all related subcontracts.

1. In the performance of this contract the contractor shall comply with all applicable Federal, State, and local laws governing safety, health, and sanitation (23 CFR 635). The contractor shall provide all safeguards, safety devices and protective equipment and take any other needed actions as it determines, or as the contracting officer may determine, to be reasonably necessary to protect the life and health of employees on the job and the safety of the public and to protect property in connection with the performance of the work covered by the contract.

2. It is a condition of this contract, and shall be made a condition of each subcontract, which the contractor enters into pursuant to this contract, that the contractor and any subcontractor shall not permit any employee, in performance of the contract, to work in surroundings or under conditions which are unsanitary, hazardous or dangerous to his/her health or safety, as determined under construction safety and health standards (29 CFR 1926) promulgated by the Secretary of Labor, in accordance with Section 107 of the Contract Work Hours and Safety Standards Act (40 U.S.C. 3704).

3. Pursuant to 29 CFR 1926.3, it is a condition of this contract that the Secretary of Labor or authorized representative thereof, shall have right of entry to any site of contract performance to inspect or investigate the matter of compliance with the construction safety and health standards and to carry out the duties of the Secretary under Section 107 of the Contract Work Hours and Safety Standards Act (40 U.S.C.3704).

VIII. FALSE STATEMENTS CONCERNING HIGHWAY PROJECTS

This provision is applicable to all Federal-aid construction contracts and to all related subcontracts.

In order to assure high quality and durable construction in conformity with approved plans and specifications and a high degree of reliability on statements and representations made by engineers, contractors, suppliers, and workers on Federal-aid highway projects, it is essential that all persons concerned with the project perform their functions as carefully, thoroughly, and honestly as possible. Willful falsification, distortion, or misrepresentation with respect to any facts related to the project is a violation of Federal law. To prevent any misunderstanding regarding the seriousness of these and similar acts, Form FHWA-1022 shall be posted on each Federal-aid highway project (23 CFR 635) in one or more places where it is readily available to all persons concerned with the project:

18 U.S.C. 1020 reads as follows:

"Whoever, being an officer, agent, or employee of the United States, or of any State or Territory, or whoever, whether a person, association, firm, or corporation, knowingly makes any false statement, false representation, or false report as to the character, quality, quantity, or cost of the material used or to be used, or the quantity or quality of the work performed or to be performed, or the cost thereof in connection with the submission of plans, maps, specifications, contracts, or costs of construction on any highway or related project submitted for approval to the Secretary of Transportation; or

Whoever knowingly makes any false statement, false representation, false report or false claim with respect to the character, quality, quantity, or cost of any work performed or to be performed, or materials furnished or to be furnished, in connection with the construction of any highway or related project approved by the Secretary of Transportation; or

Whoever knowingly makes any false statement or false representation as to material fact in any statement, certificate, or report submitted pursuant to provisions of the Federal-aid Roads Act approved July 1, 1916, (39 Stat. 355), as amended and supplemented;

Shall be fined under this title or imprisoned not more than 5 years or both."

IX. IMPLEMENTATION OF CLEAN AIR ACT AND FEDERAL WATER POLLUTION CONTROL ACT

This provision is applicable to all Federal-aid construction contracts and to all related subcontracts.

By submission of this bid/proposal or the execution of this contract, or subcontract, as appropriate, the bidder, proposer, Federal-aid construction contractor, or subcontractor, as appropriate, will be deemed to have stipulated as follows:

1. That any person who is or will be utilized in the performance of this contract is not prohibited from receiving an award due to a violation of Section 508 of the Clean Water Act or Section 306 of the Clean Air Act.
2. That the contractor agrees to include or cause to be included the requirements of paragraph (1) of this Section X in every subcontract, and further agrees to take such action as the contracting agency may direct as a means of enforcing such requirements.

X. CERTIFICATION REGARDING DEBARMENT, SUSPENSION, INELIGIBILITY AND VOLUNTARY EXCLUSION

This provision is applicable to all Federal-aid construction contracts, design-build contracts, subcontracts, lower-tier subcontracts, purchase orders, lease agreements, consultant contracts or any other covered transaction requiring FHWA approval or that is estimated to cost $25,000 or more – as defined in 2 CFR Parts 180 and 1200.

1**. Instructions for Certification – First Tier Participants:**

a. By signing and submitting this proposal, the prospective first tier participant is providing the certification set out below.

b. The inability of a person to provide the certification set out below will not necessarily result in denial of participation in this covered transaction. The prospective first tier participant shall submit an explanation of why it cannot provide the certification set out below. The certification or explanation will be considered in connection with the department or agency's determination whether to enter into this transaction. However, failure of the prospective first tier participant to furnish a certification or an explanation shall disqualify such a person from participation in this transaction.

c. The certification in this clause is a material representation of fact upon which reliance was placed when the contracting agency determined to enter into this transaction. If it is later determined that the prospective participant knowingly rendered an erroneous certification, in addition to other remedies available to the Federal Government, the contracting agency may terminate this transaction for cause of default.

d. The prospective first tier participant shall provide immediate written notice to the contracting agency to whom this proposal is submitted if any time the prospective first tier participant learns that its certification was erroneous when submitted or has become erroneous by reason of changed circumstances.

e. The terms "covered transaction," "debarred," "suspended," "ineligible," "participant," "person," "principal," and "voluntarily excluded," as used in this clause, are defined in 2 CFR Parts 180 and 1200. “First Tier Covered Transactions” refers to any covered transaction between a grantee or subgrantee of Federal funds and a participant (such as the prime or general contract). “Lower Tier Covered Transactions” refers to any covered transaction under a First Tier Covered Transaction (such as subcontracts). “First Tier Participant” refers to the participant who has entered into a covered transaction with a grantee or subgrantee of Federal funds (such as the prime or general contractor). “Lower Tier Participant” refers any participant who has entered into a covered transaction with a First Tier Participant or other Lower Tier Participants (such as subcontractors and suppliers).

f. The prospective first tier participant agrees by submitting this proposal that, should the proposed covered transaction be entered into, it shall not knowingly enter into any lower tier covered transaction with a person who is debarred, suspended, declared ineligible, or voluntarily excluded from participation in this covered transaction, unless authorized by the department or agency entering into this transaction.

g. The prospective first tier participant further agrees by submitting this proposal that it will include the clause titled "Certification Regarding Debarment, Suspension, Ineligibility and Voluntary Exclusion-Lower Tier Covered Transactions," provided by the department or contracting agency, entering into this covered transaction, without modification, in all lower tier covered transactions and in all solicitations for lower tier covered transactions exceeding the $25,000 threshold.

h. A participant in a covered transaction may rely upon a certification of a prospective participant in a lower tier covered transaction that is not debarred, suspended, ineligible, or voluntarily excluded from the covered transaction, unless it knows that the certification is erroneous. A participant is responsible for ensuring that its principals are not suspended, debarred, or otherwise ineligible to participate in covered transactions. To verify the eligibility of its principals, as well as the eligibility of any lower tier prospective participants, each participant may, but is not required to, check the Excluded Parties List System website (https://www.epls.gov/), which is compiled by the General Services Administration.

i. Nothing contained in the foregoing shall be construed to require the establishment of a system of records in order to render in good faith the certification required by this clause. The knowledge and information of the prospective participant is not required to exceed that which is normally possessed by a prudent person in the ordinary course of business dealings.

j. Except for transactions authorized under paragraph (f) of these instructions, if a participant in a covered transaction knowingly enters into a lower tier covered transaction with a person who is suspended, debarred, ineligible, or voluntarily excluded from participation in this transaction, in addition to other remedies available to the Federal Government, the department or agency may terminate this transaction for cause or default.

* * * * *

2. Certification Regarding Debarment, Suspension, Ineligibility and Voluntary Exclusion – First Tier Participants:

a. The prospective first tier participant certifies to the best of its knowledge and belief, that it and its principals:

(1) Are not presently debarred, suspended, proposed for debarment, declared ineligible, or voluntarily excluded from participating in covered transactions by any Federal department or agency;

(2) Have not within a three-year period preceding this proposal been convicted of or had a civil judgment rendered against them for commission of fraud or a criminal offense in connection with obtaining, attempting to obtain, or performing a public (Federal, State or local) transaction or contract under a public transaction; violation of Federal or State antitrust statutes or commission of embezzlement, theft, forgery, bribery, falsification or destruction of records, making false statements, or receiving stolen property;

(3) Are not presently indicted for or otherwise criminally or civilly charged by a governmental entity (Federal, State or local) with commission of any of the offenses enumerated in paragraph (a)(2) of this certification; and

(4) Have not within a three-year period preceding this application/proposal had one or more public transactions (Federal, State or local) terminated for cause or default.

b. Where the prospective participant is unable to certify to any of the statements in this certification, such prospective participant shall attach an explanation to this proposal.

2. **Instructions for Certification - Lower Tier Participants:**

(Applicable to all subcontracts, purchase orders and other lower tier transactions requiring prior FHWA approval or estimated to cost $25,000 or more - 2 CFR Parts 180 and 1200)

a. By signing and submitting this proposal, the prospective lower tier is providing the certification set out below.

b. The certification in this clause is a material representation of fact upon which reliance was placed when this transaction was entered into. If it is later determined that the prospective lower tier participant knowingly rendered an erroneous certification, in addition to other remedies available to the Federal Government, the department, or agency with which this transaction originated may pursue available remedies, including suspension and/or debarment.

c. The prospective lower tier participant shall provide immediate written notice to the person to which this proposal is submitted if at any time the prospective lower tier participant learns that its certification was erroneous by reason of changed circumstances.

d. The terms "covered transaction," "debarred," "suspended," "ineligible," "participant," "person," "principal," and "voluntarily excluded," as used in this clause, are defined in 2 CFR Parts 180 and 1200. You may contact the person to which this proposal is submitted for assistance in obtaining a copy of those regulations. “First Tier Covered Transactions” refers to any covered transaction between a grantee or subgrantee of Federal funds and a participant (such as the prime or general contract). “Lower Tier Covered Transactions” refers to any covered transaction under a First Tier Covered Transaction (such as subcontracts). “First Tier Participant” refers to the participant who has entered into a covered transaction with a grantee or subgrantee of Federal funds (such as the prime or general contractor). “Lower Tier Participant” refers any participant who has entered into a covered transaction with a First Tier Participant or other Lower Tier Participants (such as subcontractors and suppliers).

e. The prospective lower tier participant agrees by submitting this proposal that, should the proposed covered transaction be entered into, it shall not knowingly enter into any lower tier covered transaction with a person who is debarred, suspended, declared ineligible, or voluntarily excluded from participation in this covered transaction, unless authorized by the department or agency with which this transaction originated.

f. The prospective lower tier participant further agrees by submitting this proposal that it will include this clause titled "Certification Regarding Debarment, Suspension, Ineligibility and Voluntary Exclusion-Lower Tier Covered Transaction," without modification, in all lower tier covered transactions and in all solicitations for lower tier covered transactions exceeding the $25,000 threshold.

g. A participant in a covered transaction may rely upon a certification of a prospective participant in a lower tier covered transaction that is not debarred, suspended, ineligible, or voluntarily excluded from the covered transaction, unless it knows that the certification is erroneous. A participant is responsible for ensuring that its principals are not suspended, debarred, or otherwise ineligible to participate in covered transactions. To verify the eligibility of its principals, as well as the eligibility of any lower tier prospective participants, each participant may, but is not required to, check the Excluded Parties List System website (https://www.epls.gov/), which is compiled by the General Services Administration.

h. Nothing contained in the foregoing shall be construed to require establishment of a system of records in order to render in good faith the certification required by this clause. The knowledge and information of participant is not required to exceed that which is normally possessed by a prudent person in the ordinary course of business dealings.

i. Except for transactions authorized under paragraph e of these instructions, if a participant in a covered transaction knowingly enters into a lower tier covered transaction with a person who is suspended, debarred, ineligible, or voluntarily excluded from participation in this transaction, in addition to other remedies available to the Federal Government, the

department or agency with which this transaction originated may pursue available remedies, including suspension and/or debarment.

* * * * *

Certification Regarding Debarment, Suspension, Ineligibility and Voluntary Exclusion--Lower Tier Participants:

1. The prospective lower tier participant certifies, by submission of this proposal, that neither it nor its principals is presently debarred, suspended, proposed for debarment, declared ineligible, or voluntarily excluded from participating in covered transactions by any Federal department or agency.

2. Where the prospective lower tier participant is unable to certify to any of the statements in this certification, such prospective participant shall attach an explanation to this proposal.

* * * * *

XI. CERTIFICATION REGARDING USE OF CONTRACT FUNDS FOR LOBBYING

This provision is applicable to all Federal-aid construction contracts and to all related subcontracts which exceed $100,000 (49 CFR 20).

1. The prospective participant certifies, by signing and submitting this bid or proposal, to the best of his or her knowledge and belief, that:

a. No Federal appropriated funds have been paid or will be paid, by or on behalf of the undersigned, to any person for influencing or attempting to influence an officer or employee of any Federal agency, a Member of Congress, an officer or employee of Congress, or an employee of a Member of Congress in connection with the awarding of any Federal contract, the making of any Federal grant, the making of any Federal loan, the entering into of any cooperative agreement, and the extension, continuation, renewal, amendment, or modification of any Federal contract, grant, loan, or cooperative agreement.

b. If any funds other than Federal appropriated funds have been paid or will be paid to any person for influencing or attempting to influence an officer or employee of any Federal agency, a Member of Congress, an officer or employee of Congress, or an employee of a Member of Congress in connection with this Federal contract, grant, loan, or cooperative agreement, the undersigned shall complete and submit Standard Form-LLL, "Disclosure Form to Report Lobbying," in accordance with its instructions.

2. This certification is a material representation of fact upon which reliance was placed when this transaction was made or entered into. Submission of this certification is a prerequisite for making or entering into this transaction imposed by 31 U.S.C. 1352. Any person who fails to file the required certification shall be subject to a civil penalty of not less than $10,000 and not more than $100,000 for each such failure.

3. The prospective participant also agrees by submitting its bid or proposal that the participant shall require that the language of this certification be included in all lower tier subcontracts, which exceed $100,000 and that all such recipients shall certify and disclose accordingly.

ATTACHMENT A - EMPLOYMENT AND MATERIALS PREFERENCE FOR APPALACHIAN DEVELOPMENT HIGHWAY SYSTEM OR APPALACHIAN LOCAL ACCESS ROAD CONTRACTS

This provision is applicable to all Federal-aid projects funded under the Appalachian Regional Development Act of 1965.

1. During the performance of this contract, the contractor undertaking to do work which is, or reasonably may be, done as on-site work, shall give preference to qualified persons who regularly reside in the labor area as designated by the DOL wherein the contract work is situated, or the subregion, or the Appalachian counties of the State wherein the contract work is situated, except:

a. To the extent that qualified persons regularly residing in the area are not available.

b. For the reasonable needs of the contractor to employ supervisory or specially experienced personnel necessary to assure an efficient execution of the contract work.

c. For the obligation of the contractor to offer employment to present or former employees as the result of a lawful collective bargaining contract, provided that the number of nonresident persons employed under this subparagraph (1c) shall not exceed 20 percent of the total number of employees employed by the contractor on the contract work, except as provided in subparagraph (4) below.

2. The contractor shall place a job order with the State Employment Service indicating (a) the classifications of the laborers, mechanics and other employees required to perform the contract work, (b) the number of employees required in each classification, (c) the date on which the participant estimates such employees will be required, and (d) any other pertinent information required by the State Employment Service to complete the job order form. The job order may be placed with the State Employment Service in writing or by telephone. If during the course of the contract work, the information submitted by the contractor in the original job order is substantially modified, the participant shall promptly notify the State Employment Service.

3. The contractor shall give full consideration to all qualified job applicants referred to him by the State Employment Service. The contractor is not required to grant employment to any job applicants who, in his opinion, are not qualified to perform the classification of work required.

4. If, within one week following the placing of a job order by the contractor with the State Employment Service, the State Employment Service is unable to refer any qualified job applicants to the contractor, or less than the number requested, the State Employment Service will forward a certificate to the contractor indicating the unavailability of applicants. Such certificate shall be made a part of the contractor's permanent project records. Upon receipt of this certificate, the contractor may employ persons who do not normally reside in the labor area to fill positions covered by the certificate, notwithstanding the provisions of subparagraph (1c) above.

5. The provisions of 23 CFR 633.207(e) allow the contracting agency to provide a contractual preference for the use of mineral resource materials native to the Appalachian region.

6. The contractor shall include the provisions of Sections 1 through 4 of this Attachment A in every subcontract for work which is, or reasonably may be, done as on-site work.

KENTUCKY TRANSPORTATION CABINET
DEPARTMENT OF HIGHWAYS

EMPLOYMENT REQUIREMENTS
RELATING TO
NONDISCRIMINATION OF EMPLOYEES
(APPLICABLE TO FEDERAL-AID SYSTEM CONTRACTS)

AN ACT OF THE KENTUCKY GENERAL ASSEMBLY TO PREVENT DISCRIMINATION IN EMPLOYMENT

KRS CHAPTER 344
EFFECTIVE JUNE 16, 1972

The contract on this project, in accordance with KRS Chapter 344, provides that during the performance of this contract, the contractor agrees as follows:

1. The contractor shall not fail or refuse to hire, or shall not discharge any individual, or otherwise discriminate against an individual with respect to his compensation, terms, conditions, or privileges of employment, because of such individual's race, color, religion, national origin, sex, disability or age (between forty and seventy); or limit, segregate, or classify his employees in any way which would deprive or tend to deprive an individual of employment opportunities or otherwise adversely affect his status as an employee, because of such individual's race, color, religion, national origin, sex, disability or age (between forty and seventy). The contractor agrees to post in conspicuous places, available to employees and applicants for employment, notices to be provided setting forth the provisions of this nondiscrimination clause.

2. The contractor shall not print or publish or cause to be printed or published a notice or advertisement relating to employment by such an employer or membership in or any classification or referral for employment by the employment agency, indicating any preference, limitation, specification, or discrimination, based on race, color, religion, national origin, sex, disability or age (between forty and seventy), except that such notice or advertisement may indicate a preference, limitation, or specification based on religion, or national origin when religion, or national origin is a bona fide occupational qualification for employment.

3. If the contractor is in control of apprenticeship or other training or retraining, including on-the-job training programs, he shall not discriminate against an individual because of his race, color, religion, national origin, sex, disability or age (between forty and seventy), in admission to, or employment in any program established to provide apprenticeship or other training.

4. The contractor will send to each labor union or representative of workers with which he has a collective bargaining agreement or other contract or understanding, a notice to be provided advising the said labor union or workers' representative of the contractor's commitments under this section, and shall post copies of the notice in conspicuous places available to employees and applicants for employment. The contractor will take such action with respect to any subcontract or purchase order as the administrating agency may direct as a means of enforcing such provisions, including sanctions for non-compliance.

REVISED: 12-3-92

EXECUTIVE BRANCH CODE OF ETHICS

In the 1992 regular legislative session, the General Assembly passed and Governor Brereton Jones signed Senate Bill 63 (codified as KRS 11A), the Executive Branch Code of Ethics, which states, in part:

> KRS 11A.040 (6) provides:
>
> No present or former public servant shall, within six (6) months of following termination of his office or employment, accept employment, compensation or other economic benefit from any person or business that contracts or does business with the state in matters in which he was directly involved during his tenure. This provision shall not prohibit an individual from returning to the same business, firm, occupation, or profession in which he was involved prior to taking office or beginning his term of employment, provided that, for a period of six (6) months, he personally refrains from working on any matter in which he was directly involved in state government. This subsection shall not prohibit the performance of ministerial functions, including, but not limited to, filing tax returns, filing applications for permits or licenses, or filing incorporation papers.
>
> KRS 11A.040 (8) states:
>
> A former public servant shall not represent a person in a matter before a state agency in which the former public servant was directly involved, for a period of one (1) year after the latter of:
>
> a) The date of leaving office or termination of employment; or
> b) The date the term of office expires to which the public servant was elected.

This law is intended to promote public confidence in the integrity of state government and to declare as public policy the idea that state employees should view their work as a public trust and not as a way to obtain private benefits.

If you have worked for the executive branch of state government within the past six months, you may be subject to the law's prohibitions. The law's applicability may be different if you hold elected office or are contemplating representation of another before a state agency.

Also, if you are affiliated with a firm which does business with the state and which employs former state executive-branch employees, you should be aware that the law may apply to them.

In case of doubt, the law permits you to request an advisory opinion from the Executive Branch Ethics Commission, Room 136, Capitol Building, 700 Capitol Avenue, Frankfort, Kentucky 40601; telephone (502) 564-7954.

General Decision Number: KY140100 08/22/2014 KY100

Superseded General Decision Number: KY20130100

State: Kentucky

Construction Type: Highway

Counties: Anderson, Bath, Bourbon, Boyd, Boyle, Bracken, Breckinridge, Bullitt, Carroll, Carter, Clark, Elliott, Fayette, Fleming, Franklin, Gallatin, Grant, Grayson, Greenup, Hardin, Harrison, Henry, Jefferson, Jessamine, Larue, Lewis, Madison, Marion, Mason, Meade, Mercer, Montgomery, Nelson, Nicholas, Oldham, Owen, Robertson, Rowan, Scott, Shelby, Spencer, Trimble, Washington and Woodford Counties in Kentucky.

HIGHWAY CONSTRUCTION PROJECTS (excluding tunnels, building structures in rest area projects & railroad construction; bascule, suspension & spandrel arch bridges designed for commercial navigation, bridges involving marine construction; and other major bridges).

Modification Number	Publication Date
0	01/03/2014
1	02/14/2014
2	04/18/2014
3	05/09/2014
4	05/23/2014
5	06/06/2014
6	06/27/2014
7	07/04/2014
8	07/18/2014
9	07/25/2014
10	08/22/2014

BRIN0004-003 06/01/2011

BRECKENRIDGE COUNTY

	Rates	Fringes
BRICKLAYER	$ 24.11	10.07

BRKY0001-005 06/01/2013

BULLITT, CARROLL, GRAYSON, HARDIN, HENRY, JEFFERSON, LARUE, MARION, MEADE, NELSON, OLDHAM, SHELBY, SPENCER, & TRIMBLE COUNTIES:

	Rates	Fringes
BRICKLAYER	$ 24.82	10.71

BRKY0002-006 06/01/2011

BRACKEN, GALLATIN, GRANT, MASON & ROBERTSON COUNTIES:

	Rates	Fringes
BRICKLAYER	$ 26.57	10.26

BRKY0007-004 06/01/2011

BOYD, CARTER, ELLIOT, FLEMING, GREENUP, LEWIS & ROWAN COUNTIES:

	Rates	Fringes
BRICKLAYER	$ 28.29	16.80

BRKY0017-004 06/01/2009

ANDERSON, BATH, BOURBON, BOYLE, CLARK, FAYETTE, FRANKLIN, HARRISON, JESSAMINE, MADISON, MERCER, MONTGOMERY, NICHOLAS, OWEN, SCOTT, WASHINGTON & WOODFORD COUNTIES:

	Rates	Fringes
BRICKLAYER	$ 24.11	9.97

CARP0064-001 04/01/2014

	Rates	Fringes
CARPENTER	$ 27.50	14.96
Diver	$ 41.63	14.96
PILEDRIVERMAN	$ 27.75	14.96

ELEC0212-008 06/02/2014

BRACKEN, GALLATIN and GRANT COUNTIES

	Rates	Fringes
ELECTRICIAN	$ 26.74	16.45

ELEC0212-014 07/01/2013

BRACKEN, GALLATIN & GRANT COUNTIES:

	Rates	Fringes
Sound & Communication Technician	$ 22.50	9.51

* ELEC0317-012 05/28/2014

BOYD, CARTER, ELLIOT & ROWAN COUNTIES:

	Rates	Fringes
ELECTRICIAN		
Cable Splicer	$ 32.68	18.13
Electrician	$ 32.62	21.45

ELEC0369-007 05/29/2013

ANDERSON, BATH, BOURBON, BOYLE, BRECKINRIDGE, BULLITT, CARROLL, CLARK, FAYETTE, FRAONKLIN, GRAYSON, HARDIN, HARRISON, HENRY, JEFFERSON, JESSAMINE, LARUE, MADISON, MARION, MEADE, MERCER, MONTGOMERY, NELSON, NICHOLAS, OLDHAM, OWEN, ROBERTSON, SCOTT, SHELBY, SPENCER, TRIMBLE, WASHINGTON, & WOODFORD COUNTIES:

	Rates	Fringes
ELECTRICIAN	$ 29.48	14.37

ELEC0575-002 06/02/2014

FLEMING, GREENUP, LEWIS & MASON COUNTIES:

	Rates	Fringes
ELECTRICIAN	$ 31.70	14.21

ENGI0181-018 07/01/2014

	Rates	Fringes
POWER EQUIPMENT OPERATOR		
GROUP 1	$ 28.85	14.15
GROUP 2	$ 26.24	14.15
GROUP 3	$ 26.65	14.15
GROUP 4	$ 25.95	14.15

OPERATING ENGINEER CLASSIFICATIONS

GROUP 1 - A-Frame Winch Truck; Auto Patrol; Backfiller; Batcher Plant; Bituminous Paver; Bituminous Transfer Machine; Boom Cat; Bulldozer; Mechanic; Cableway; Carry-All Scoop; Carry Deck Crane; Central Compressor Plant; Cherry Picker; Clamshell; Concrete Mixer (21 cu. ft. or Over); Concrete Paver; Truck-Mounted Concrete Pump; Core Drill; Crane; Crusher Plant; Derrick; Derrick Boat; Ditching & Trenching Machine; Dragline; Dredge Operator; Dredge Engineer; Elevating Grader & Loaders; Grade-All; Gurries; Heavy Equipment Robotics Operator/Mechanic; High Lift; Hoe-Type Machine; Hoist (Two or More Drums); Hoisting Engine (Two or More Drums); Horizontal Directional Drill Operator; Hydrocrane; Hyster; KeCal Loader; LeTourneau; Locomotive; Mechanic; Mechanically Operated Laser Screed; Mechanic Welder; Mucking Machine; Motor Scraper; Orangepeel Bucket; Overhead Crane; Piledriver; Power Blade; Pumpcrete; Push Dozer; Rock Spreader, attached to equipment; Rotary Drill; Roller (Bituminous); Rough Terrain Crane; Scarifier; Scoopmobile; Shovel; Side Boom; Subgrader; Tailboom; Telescoping Type Forklift; Tow or Push Boat; Tower Crane (French, German & other types); Tractor Shovel; Truck Crane; Tunnel Mining Machines, including Moles, Shields or similar types of Tunnel Mining Equipment

GROUP 2 - Air Compressor (Over 900 cu. ft. per min.); Bituminous Mixer; Boom Type Tamping Machine; Bull Float; Concrete Mixer (Under 21 cu. ft.); Dredge Engineer; Electric Vibrator; Compactor/Self-Propelled Compactor;

Elevator (One Drum or Buck Hoist); Elevator (When used to Hoist Building Material); Finish Machine; Firemen & Hoist (One Drum); Flexplane; Forklift (Regardless of Lift Height); Form Grader; Joint Sealing Machine; Outboard Motor Boat; Power Sweeper (Riding Type); Roller (Rock); Ross Carrier; Skid Mounted or Trailer Mounted Conrete Pump; Skid Steer Machine with all Attachments; Switchman or Brakeman; Throttle Valve Person; Tractair & Road Widening Trencher; Tractor (50 H.P. or Over); Truck Crane Oiler; Tugger; Welding Machine; Well Points; & Whirley Oiler

GROUP 3 - All Off Road Material Handling Equipment, including Articulating Dump Trucks; Greaser on Grease Facilities servicing Heavy Equipment

GROUP 4 - Bituminous Distributor; Burlap & Curing Machine; Cement Gun; Concrete Saw; Conveyor; Deckhand Oiler; Grout Pump; Hydraulic Post Driver; Hydro Seeder; Mud Jack; Oiler; Paving Joint Machine; Power Form Handling Equipment; Pump; Roller (Earth); Steerman; Tamping Machine; Tractor (Under 50 H.P.); & Vibrator

CRANES - with booms 150 ft. & Over (Including JIB), and where the length of the boom in combination with the length of the piling leads equals or exceeds 150 ft. - $1.00 over Group 1 rate

EMPLOYEES ASSIGNED TO WORK BELOW GROUND LEVEL ARE TO BE PAID 10%
ABOVE BASIC WAGE RATE. THIS DOES NOT APPLY TO OPEN CUT WORK.

IRON0044-009 06/01/2013

BRACKEN, GALLATIN, GRANT, HARRISON, ROBERTSON,
BOURBON (Northern third, including Townships of Jackson, Millersburg, Ruddel Mills & Shawhan);
CARROLL (Eastern third, including the Township of Ghent);
FLEMING (Western part, excluding Townships of Beechburg, Colfax, Elizaville, Flemingsburg, Flemingsburg Junction, Foxport, Grange City, Hillsboro, Hilltop, Mount Carmel, Muses Mills, Nepton, Pecksridge, Plummers Landing, Plummers Mill, Poplar Plains, Ringos Mills, Tilton & Wallingford);
MASON (Western two-thirds, including Townships of Dover, Lewisburg, Mays Lick, Maysville, Minerva, Moranburg, Murphysville, Ripley, Sardis, Shannon, South Ripley & Washington);
NICHOLAS (Townships of Barefoot, Barterville, Carlisle, Ellisville, Headquarters, Henryville, Morningglory, Myers & Oakland Mills);
OWEN (Townships of Beechwood, Bromley, Fairbanks, Holbrook, Jonesville, Long Ridge, Lusby's Mill, New, New Columbus, New Liberty, Owenton, Poplar Grove, Rockdale, Sanders, Teresita & Wheatley);
SCOTT (Northern two-thirds, including Townships of Biddle, Davis, Delaplain, Elmville, Longlick, Muddy Ford, Oxford, Rogers Gap, Sadieville, Skinnersburg & Stonewall)

	Rates	Fringes

IRONWORKER
Fence Erector.....$ 22.50 18.40
Structural.....$ 24.80 18.40

IRON0070-006 06/01/2014

ANDERSON, BOYLE, BRECKINRIDGE, BULLITT, FAYETTE, FRANKLIN, GRAYSON, HARDIN, HENRY, JEFFERSON, JESSAMINE, LARUE, MADISON, MARION, MEADE, MERCER, NELSON, OLDHAM, SHELBY, SPENCER, TRIMBLE, WASHINGTON & WOODFORD
BOURBON (Southern two-thirds, including Townships of Austerlity, Centerville, Clintonville, Elizabeth, Hutchison, Littlerock, North Middletown & Paris);
CARROLL (Western two-thirds, including Townships of Carrollton, Easterday, English, Locust, Louis, Prestonville & Worthville);
CLARK (Western two-thirds, including Townships of Becknerville, Flanagan, Ford, Pine Grove, Winchester & Wyandotte);
OWEN (Eastern eighth, including Townships of Glenmary, Gratz, Monterey, Perry Park & Tacketts Mill);
SCOTT (Southern third, including Townships of Georgetown, Great Crossing, Newtown, Stampling Ground & Woodlake);

	Rates	Fringes
IRONWORKER.....	$ 26.97	19.75

IRON0372-006 06/01/2013

BRACKEN, GALLATIN, GRANT, HARRISON and ROBERTSON
BOURBON (Northern third, including Townships of Jackson, Millersburg, Ruddel Mills & Shawhan);
CARROLL (Eastern third, including the Township of Ghent);
FLEMING (Western part, Excluding Townships of Beechburg, Colfax, Elizaville, Flemingsburg, Flemingsburg Junction, Foxport, Grange City, Hillsboro, Hilltop, Mount Carmel, Muses Mills, Nepton, Pecksridge, Plummers Landing, Plummers Mill, Poplar Plains,
Ringos Mills, Tilton & Wallingford);
MASON (Western two-thirds, including Townships of Dover, Lewisburg, Mays Lick, Maysville, Minerva, Moranburg, Murphysville, Ripley, Sardis, Shannon, South Ripley & Washington);
NICHOLAS (Townships of Barefoot, Barterville, Carlisle, Ellisville, Headquarters, Henryville, Morningglory, Myers & Oakland Mills);
OWEN (Townships of Beechwood, Bromley, Fairbanks, Holbrook, Jonesville, Long Ridge, Lusby's Mill, New, New Columbus, New Liberty, Owenton, Poplar Grove, Rockdale, Sanders, Teresita & Wheatley);
SCOTT (Northern two-thirds, including Townships of Biddle, Davis,Delaplain, Elmville, Longlick, Muddy Ford, Oxford, Rogers Gap, Sadieville, Skinnersburg & Stonewall) COUNTIES

	Rates	Fringes
IRONWORKER, REINFORCING.....	$ 26.47	19.30

IRON0769-007 12/01/2012

BATH, BOYD, CARTER, ELLIOTT, GREENUP, LEWIS, MONTGOMERY & ROWAN
CLARK (Eastern third, including townships of Bloomingdale,
Hunt, Indian Fields, Kiddville, Loglick, Rightangele & Thomson);
FLEMING (Townships of Beechburg, Colfax, Elizaville,
Flemingsburg, Flemingsburg Junction, Foxport, Grange City,
Hillsboro, Hilltop, Mount Carmel, Muses Mills, Nepton,
Pecksridge, Plummers Landing, Plummers Mill, Poplar Plains,
Ringos Mills, Tilton & Wallingford);
MASON (Eastern third, including Townships of Helena, Marshall,
Orangeburg, Plumville & Springdale);
NICHOLAS (Eastern eighth, including the Township of Moorefield
Sprout)

	Rates	Fringes
IRONWORKER	$ 32.54	20.18

LABO0189-003 07/01/2014

BATH, BOURBON, BOYD, BOYLE, BRACKEN, CARTER, CLARK, ELLIOTT,
FAYETTE, FLEMING, FRANKLIN, GALLATIN, GRANT, GREENUP, HARRISON,
JESSAMINE, LEWIS, MADISON, MASON, MERCER, MONTGOMERY, NICHOLAS,
OWEN, ROBERTSON, ROWAN, SCOTT, & WOOLFORD COUNTIES

	Rates	Fringes
Laborers:		
GROUP 1	$ 21.80	11.96
GROUP 2	$ 22.05	11.96
GROUP 3	$ 22.10	11.96
GROUP 4	$ 22.70	11.96

LABORERS CLASSIFICATIONS

GROUP 1 - Aging & Curing of Concrete; Asbestos Abatement Worker; Asphalt Plant; Asphalt; Batch Truck Dump; Carpenter Tender; Cement Mason Tender; Cleaning of Machines; Concrete; Demolition; Dredging; Environmental - Nuclear, Radiation, Toxic & Hazardous Waste - Level D; Flagperson; Grade Checker; Hand Digging & Hand Back Filling; Highway Marker Placer; Landscaping, Mesh Handler & Placer; Puddler; Railroad; Rip-rap & Grouter; Right-of-Way; Sign, Guard Rail & Fence Installer; Signal Person; Sound Barrier Installer; Storm & Sanitary Sewer; Swamper; Truck Spotter & Dumper; Wrecking of Concrete Forms; General Cleanup

GROUP 2 - Batter Board Man (Sanitary & Storm Sewer); Brickmason Tender; Mortar Mixer Operator; Scaffold Builder; Burner & Welder; Bushammer; Chain Saw Operator; Concrete Saw Operator; Deckhand Scow Man; Dry Cement Handler; Environmental - Nuclear, Radiation, Toxic & Hazardous Waste - Level C; Forklift Operator for Masonary; Form Setter; Green Concrete Cutting; Hand Operated Grouter & Grinder Machine Operator; Jackhammer; Pavement Breaker; Paving Joint Machine; Pipelayer; Plastic Pipe Fusion; Power Driven Georgia Buggy & Wheel Barrow; Power Post Hole Digger;

Precast Manhole Setter; Walk-Behind Tamper; Walk-Behind Trencher; Sand Blaster; Concrete Chipper; Surface Grinder; Vibrator Operator; Wagon Driller

GROUP 3 - Asphalt Luteman & Raker; Gunnite Nozzleman; Gunnite Operator & Mixer; Grout Pump Operator; Side Rail Setter; Rail Paved Ditches; Screw Operator; Tunnel (Free Air); Water Blaster

GROUP 4 - Caisson Worker (Free Air); Cement Finisher; Environmental - Nuclear, Radiation, Toxic & Hazardous Waste - Levels A & B; Miner & Driller (Free Air); Tunnel Blaster; & Tunnel Mucker (Free Air); Directional & Horizontal Boring; Air Track Drillers (All Types); Powdermen & Blasters; Troxler & Concrete Tester if Laborer is Utilized

---

LABO0189-008 07/01/2014

ANDERSON, BULLITT, CARROLL, HARDIN, HENRY, JEFFERSON, LARUE, MARION, MEADE, NELSON, OLDHAM, SHELBY, SPENCER, TRIMBLE & WASHINGTON COUNTIES

	Rates	Fringes
Laborers:		
GROUP 1.....$	22.71	11.05
GROUP 2.....$	22.96	11.05
GROUP 3.....$	23.01	11.05
GROUP 4.....$	23.61	11.05

LABORERS CLASSIFICATIONS

GROUP 1 - Aging & Curing of Concrete; Asbestos Abatement Worker; Asphalt Plant; Asphalt; Batch Truck Dump; Carpenter Tender; Cement Mason Tender; Cleaning of Machines; Concrete; Demolition; Dredging; Environmental - Nuclear, Radiation, Toxic & Hazardous Waste - Level D; Flagperson; Grade Checker; Hand Digging & Hand Back Filling; Highway Marker Placer; Landscaping, Mesh Handler & Placer; Puddler; Railroad; Rip-rap & Grouter; Right-of-Way; Sign, Guard Rail & Fence Installer; Signal Person; Sound Barrier Installer; Storm & Sanitary Sewer; Swamper; Truck Spotter & Dumper; Wrecking of Concrete Forms; General Cleanup

GROUP 2 - Batter Board Man (Sanitary & Storm Sewer); Brickmason Tender; Mortar Mixer Operator; Scaffold Builder; Burner & Welder; Bushammer; Chain Saw Operator; Concrete Saw Operator; Deckhand Scow Man; Dry Cement Handler; Environmental - Nuclear, Radiation, Toxic & Hazardous Waste - Level C; Forklift Operator for Masonary; Form Setter; Green Concrete Cutting; Hand Operated Grouter & Grinder Machine Operator; Jackhammer; Pavement Breaker; Paving Joint Machine; Pipelayer; Plastic Pipe Fusion; Power Driven Georgia Buggy & Wheel Barrow; Power Post Hole Digger; Precast Manhole Setter; Walk-Behind Tamper; Walk-Behind Trencher; Sand Blaster; Concrete Chipper; Surface Grinder; Vibrator Operator; Wagon Driller

GROUP 3 - Asphalt Luteman & Raker; Gunnite Nozzleman; Gunnite Operator & Mixer; Grout Pump Operator; Side Rail Setter; Rail Paved Ditches; Screw Operator; Tunnel (Free Air); Water Blaster

GROUP 4 - Caisson Worker (Free Air); Cement Finisher; Environmental - Nuclear, Radiation, Toxic & Hazardous Waste - Levels A & B; Miner & Driller (Free Air); Tunnel Blaster; & Tunnel Mucker (Free Air); Directional & Horizontal Boring; Air Track Drillers (All Types); Powdermen & Blasters; Troxler & Concrete Tester if Laborer is Utilized

---

LABO0189-009 07/01/2014

BRECKINRIDGE & GRAYSON COUNTIES

	Rates	Fringes
Laborers:		
GROUP 1	$ 22.66	11.10
GROUP 2	$ 22.91	11.10
GROUP 3	$ 22.96	11.10
GROUP 4	$ 23.56	11.10

LABORERS CLASSIFICATIONS

GROUP 1 - Aging & Curing of Concrete; Asbestos Abatement Worker; Asphalt Plant; Asphalt; Batch Truck Dump; Carpenter Tender; Cement Mason Tender; Cleaning of Machines; Concrete; Demolition; Dredging; Environmental - Nuclear, Radiation, Toxic & Hazardous Waste - Level D; Flagperson; Grade Checker; Hand Digging & Hand Back Filling; Highway Marker Placer; Landscaping, Mesh Handler & Placer; Puddler; Railroad; Rip-rap & Grouter; Right-of-Way; Sign, Guard Rail & Fence Installer; Signal Person; Sound Barrier Installer; Storm & Sanitary Sewer; Swamper; Truck Spotter & Dumper; Wrecking of Concrete Forms; General Cleanup

GROUP 2 - Batter Board Man (Sanitary & Storm Sewer); Brickmason Tender; Mortar Mixer Operator; Scaffold Builder; Burner & Welder; Bushammer; Chain Saw Operator; Concrete Saw Operator; Deckhand Scow Man; Dry Cement Handler; Environmental - Nuclear, Radiation, Toxic & Hazardous Waste - Level C; Forklift Operator for Masonary; Form Setter; Green Concrete Cutting; Hand Operated Grouter & Grinder Machine Operator; Jackhammer; Pavement Breaker; Paving Joint Machine; Pipelayer; Plastic Pipe Fusion; Power Driven Georgia Buggy & Wheel Barrow; Power Post Hole Digger; Precast Manhole Setter; Walk-Behind Tamper; Walk-Behind Trencher; Sand Blaster; Concrete Chipper; Surface Grinder; Vibrator Operator; Wagon Driller

GROUP 3 - Asphalt Luteman & Raker; Gunnite Nozzleman; Gunnite Operator & Mixer; Grout Pump Operator; Side Rail Setter; Rail Paved Ditches; Screw Operator; Tunnel (Free Air); Water Blaster

GROUP 4 - Caisson Worker (Free Air); Cement Finisher; Environmental - Nuclear, Radiation, Toxic & Hazardous Waste

- Levels A & B; Miner & Driller (Free Air); Tunnel Blaster; & Tunnel Mucker (Free Air); Directional & Horizontal Boring; Air Track Drillers (All Types); Powdermen & Blasters; Troxler & Concrete Tester if Laborer is Utilized

---

PAIN0012-005 06/11/2005

BATH, BOURBON, BOYLE, CLARK, FAYETTE, FLEMING, FRANKLIN, HARRISON, JESSAMINE, MADISON, MERCER, MONTGOMERY, NICHOLAS, ROBERTSON, SCOTT & WOODFORD COUNTIES:

	Rates	Fringes
PAINTER		
Bridge/Equipment Tender and/or Containment Builder	$ 18.90	5.90
Brush & Roller	$ 21.30	5.90
Elevated Tanks; Steeplejack Work; Bridge & Lead Abatement	$ 22.30	5.90
Sandblasting & Waterblasting	$ 22.05	5.90
Spray	$ 21.80	5.90

PAIN0012-017 05/01/2014

BRACKEN, GALLATIN, GRANT, MASON & OWEN COUNTIES:

	Rates	Fringes
PAINTER (Heavy & Highway Bridges - Guardrails - Lightpoles - Striping)		
Bridge Equipment Tender and Containment Builder	$ 20.73	8.71
Brush & Roller	$ 23.39	8.71
Elevated Tanks; Steeplejack Work; Bridge & Lead Abatement	$ 24.39	8.71
Sandblasting & Water Blasting	$ 24.14	8.71
Spray	$ 23.89	8.71

PAIN0118-004 06/01/2014

ANDERSON, BRECKINRIDGE, BULLITT, CARROLL, GRAYSON, HARDIN, HENRY, JEFFERSON, LARUE, MARION, MEADE, NELSON, OLDHAM, SHELBY, SPENCER, TRIMBLE & WASHINGTON COUNTIES:

	Rates	Fringes
PAINTER		
Brush & Roller	$ 18.50	12.02
Spray, Sandblast, Power Tools, Waterblast & Steam Cleaning	$ 19.00	12.02

PAIN1072-003 12/01/2013

BOYD, CARTER, ELLIOTT, GREENUP, LEWIS and ROWAN COUNTIES

	Rates	Fringes
Painters:		
Bridges; Locks; Dams; Tension Towers & Energized Substations	$ 31.03	15.10
Power Generating Facilities	$ 27.79	15.10

PLUM0248-003 06/01/2014

BOYD, CARTER, ELLIOTT, GREENUP, LEWIS & ROWAN COUNTIES:

	Rates	Fringes
Plumber and Steamfitter	$ 33.00	18.95

PLUM0392-007 06/01/2014

BRACKEN, CARROLL (Eastern Half), GALLATIN, GRANT, MASON, OWEN & ROBERTSON COUNTIES:

	Rates	Fringes
Plumbers and Pipefitters	$ 29.80	17.79

PLUM0502-003 08/01/2013

BRECKINRIDGE, BULLITT, CARROLL (Western Half), FRANKLIN (Western three-fourths), GRAYSON, HARDIN, HENRY, JEFFERSON, LARUE, MARION, MEADE, NELSON, OLDHAM, SHELBY, SPENCER, TRIMBLE & WASHINGTON COUNTIES

	Rates	Fringes
PLUMBER	$ 32.00	17.17

SUKY2010-160 10/08/2001

	Rates	Fringes
Truck drivers:		
GROUP 1	$ 16.57	7.34
GROUP 2	$ 16.68	7.34
GROUP 3	$ 16.86	7.34
GROUP 4	$ 16.96	7.34

TRUCK DRIVER CLASSIFICATIONS

GROUP 1 - Mobile Batch Truck Tender

GROUP 2 - Greaser; Tire Changer; & Mechanic Tender

GROUP 3 - Single Axle Dump; Flatbed; Semi-trailer or Pole Trailer when used to pull building materials and equipment;

Tandem Axle Dump; Distributor; Mixer; & Truck Mechanic

GROUP 4 - Euclid & Other Heavy Earthmoving Equipment & Lowboy; Articulator Cat; 5-Axle Vehicle; Winch & A-Frame when used in transporting materials; Ross Carrier; Forklift when used to transport building materials; & Pavement Breaker

---

WELDERS - Receive rate prescribed for craft performing operation to which welding is incidental.

==========

Unlisted classifications needed for work not included within the scope of the classifications listed may be added after award only as provided in the labor standards contract clauses (29CFR 5.5 (a) (1) (ii)).

The body of each wage determination lists the classification and wage rates that have been found to be prevailing for the cited type(s) of construction in the area covered by the wage determination. The classifications are listed in alphabetical order of "identifiers" that indicate whether the particular rate is union or non-union.

Union Identifiers

An identifier enclosed in dotted lines beginning with characters other than "SU" denotes that the union classification and rate have found to be prevailing for that classification. Example: PLUM0198-005 07/01/2011. The first four letters , PLUM, indicate the international union and the four-digit number, 0198, that follows indicates the local union number or district council number where applicable , i.e., Plumbers Local 0198. The next number, 005 in the example, is an internal number used in processing the wage determination. The date, 07/01/2011, following these characters is the effective date of the most current negotiated rate/collective bargaining agreement which would be July 1, 2011 in the above example.

Union prevailing wage rates will be updated to reflect any changes in the collective bargaining agreements governing the rates.

0000/9999: weighted union wage rates will be published annually each January.

Non-Union Identifiers

Classifications listed under an "SU" identifier were derived from survey data by computing average rates and are not union rates; however, the data used in computing these rates may include both union and non-union data. Example: SULA2004-007 5/13/2010. SU indicates the rates are not union majority rates, LA indicates the State of Louisiana; 2004 is the year of the survey; and 007 is an internal number used in producing the wage determination. A 1993 or later date, 5/13/2010, indicates the classifications and rates under that identifier were issued as a General Wage Determination on that date.

Survey wage rates will remain in effect and will not change until a new survey is conducted.

WAGE DETERMINATION APPEALS PROCESS

1.) Has there been an initial decision in the matter? This can be:

* an existing published wage determination
* a survey underlying a wage determination
* a Wage and Hour Division letter setting forth a position on a wage determination matter
* a conformance (additional classification and rate) ruling

On survey related matters, initial contact, including requests for summaries of surveys, should be with the Wage and Hour Regional Office for the area in which the survey was conducted because those Regional Offices have responsibility for the Davis-Bacon survey program. If the response from this initial contact is not satisfactory, then the process described in 2.) and 3.) should be followed.

With regard to any other matter not yet ripe for the formal process described here, initial contact should be with the Branch of Construction Wage Determinations. Write to:

Branch of Construction Wage Determinations
Wage and Hour Division
U.S. Department of Labor
200 Constitution Avenue, N.W.
Washington, DC 20210

2.) If the answer to the question in 1.) is yes, then an interested party (those affected by the action) can request review and reconsideration from the Wage and Hour Administrator (See 29 CFR Part 1.8 and 29 CFR Part 7). Write to:

Wage and Hour Administrator
U.S. Department of Labor
200 Constitution Avenue, N.W.
Washington, DC 20210

The request should be accompanied by a full statement of the interested party's position and by any information (wage payment data, project description, area practice material, etc.) that the requestor considers relevant to the issue.

3.) If the decision of the Administrator is not favorable, an interested party may appeal directly to the Administrative Review Board (formerly the Wage Appeals Board). Write to:

Administrative Review Board
U.S. Department of Labor
200 Constitution Avenue, N.W.
Washington, DC 20210

4.) All decisions by the Administrative Review Board are final.

==========

END OF GENERAL DECISION

Fringe benefit amounts are applicable for all hours worked except when otherwise noted.

These rates are listed pursuant to the Kentucky Determination No. CR-14-III- HWY dated July 14, 2014.

No laborer, workman or mechanic shall be paid at a rate less than that of a Journeyman except those classified as bona fide apprentices.

Apprentices or trainees shall be permitted to work as such subject to Administrative Regulations adopted by the Commissioner of Workplace Standards. Copies of these regulations will be furnished upon request from any interested person.

Before using apprentices on the job the contractor shall present to the Contracting Officer written evidence of registration of such employees in a program of a State apprenticeship and training agency approved and recognized by the U. S. Bureau of Apprenticeship and Training. In the absence of such a State agency, the contractor shall submit evidence of approval and registration by the U. S. Bureau of Apprenticeship and Training.

The contractor shall submit to the Contracting Officer, written evidence of the established apprenticeship-journeyman ratios and wage rates in the project area, which will be the basis for establishing such ratios and rates for the project under the applicable contract provisions.

TO: EMPLOYERS/EMPLOYEES

PREVAILING WAGE SCHEDULE:

The wages indicated on this wage schedule are the least permitted to be paid for the occupations indicated. When an employee works in more than one classification, the employer must record the number of hours worked in each classification at the prescribed hourly base rate.

OVERTIME:

Overtime is to be paid after an employee works eight (8) hours a day or forty (40) hours a week, whichever gives the employee the greater wages. At least time and one-half the base rate is required for all overtime. A laborer, workman or mechanic and an employer may enter into a written agreement or a collective bargaining agreement to work more than eight (8) hours a calendar day but not more than ten (10) hours a calendar day for the straight time hourly rate. Wage violations or questions should be directed to the designated Engineer or the undersigned.

Diana Castle Radcliffe, P.E.
Director, Division of Construction Procurement
Frankfort, Kentucky 40622

NOTICE OF REQUIREMENT FOR AFFIRMATIVE ACTION TO ENSURE EQUAL EMPLOYMENT OPPORTUNITY (Executive Order 11246)

1. The Offeror's or Bidder's attention is called to the "Equal Opportunity Clause" and the "Standard Federal Equal Employment Specifications" set forth herein.

2. The goals and timetables for minority and female participation, expressed in percentage terms for the Contractor's aggregate work force in each trade on all construction work in the covered area, are as follows:

GOALS FOR MINORITY PARTICIPATION IN EACH TRADE	GOALS FOR FEMALE PARTICIPATION IN EACH TRADE
9.2%	6.9%

These goals are applicable to all the Contractor's construction work (whether or not it is Federal or federally-assisted) performed in the covered area. If the contractor performs construction work in a geographical area located outside of the covered area, it shall apply the goals established for such geographical area where the work is actually performed. With regard to this second area, the contractor also is subject to the goals for both its federally involved and non-federally involved construction.

The Contractor's compliance with the Executive Order and the regulations in CFR Part 60-4 shall be based on its implementation of the Equal Opportunity Clause, specific affirmative action obligations required by the specifications set forth in 41 CFR 60-4, 3(a), and its efforts to meet the goals. The hours of minority and female employment and training must be substantially uniform throughout the length of the contract, and in each trade, and the contractor shall make a good faith effort to employ minorities and women evenly on each of its projects. The transfer of minority or female employees or trainees from Contractor to Contractor or from project to project for the sole purpose of meeting the Contractor's goals shall be a violation of the contract, the Executive Order and the regulations in 41 CFR Part 60-4. Compliance with the goals will be measured against the total work hours performed.

3. The Contractor shall provide written notification to the Director of the Office of Federal Contract Compliance Programs within ten (10) working days of award of any construction subcontract in excess of $10,000.00 at any tier for construction work under the contract resulting from this solicitation. The notification shall list the name, address and telephone number of the subcontractor; employer identification number of the subcontractor; estimated dollar amount of the subcontract; estimated starting and completion dates of the subcontract; and the geographical area in which the subcontract is to be performed. The notification shall be mailed to:

Evelyn Teague, Regional Director
Office of Federal Contract Compliance Programs
61 Forsyth Street, SW, Suite 7B75
Atlanta, Georgia 30303-8609

4. As used in this Notice, and in the contract resulting from this solicitation, the **"covered area"** is Grant County.

PART IV

INSURANCE

INSURANCE

The Contractor shall procure and maintain the following insurance in addition to the insurance required by law:

1) Commercial General Liability-Occurrence form – not less than $2,000,000 General aggregate, $2,000,000 Products & Completed Aggregate, $1,000,000 Personal & Advertising, $1,000,000 each occurrence.

2) Automobile Liability- $1,000,000 per accident

3) Employers Liability:

   a) $100,000 Each Accident Bodily Injury
   b) $500,000 Policy limit Bodily Injury by Disease
   c) $100,000 Each Employee Bodily Injury by Disease

4) The insurance required above must be evidenced by a Certificate of Insurance and this Certificate of Insurance must contain one of the following statements:
   a) "policy contains no deductible clauses."
   b) "policy contains _____ (amount) deductible property damage clause but company will pay claim and collect the deductible from the insured."

5) KENTUCKY WORKMEN'S COMPENSATION INSURANCE. The contractor shall furnish evidence of coverage of all his employees or give evidence of self-insurance by submitting a copy of a certificate issued by the Workmen's Compensation Board.

The cost of insurance is incidental to all contract items. All subcontractors must meet the same minimum insurance requirements.

PART V

BID ITEMS

141266

PROPOSAL BID ITEMS

Report Date 9/4/14

Section: 0001 - PAVING

LINE	BID CODE	ALT	DESCRIPTION	QUANTITY	UNIT	UNIT PRICE	FP	AMOUNT
0010	00190		LEVELING & WEDGING PG64-22	1,250.00	TON		$	
0020	00219		CL4 ASPH BASE 1.00D PG76-22	46,500.00	TON		$	
0030	00342		CL4 ASPH SURF 0.38A PG76-22	24,600.00	TON		$	
0040	02677		ASPHALT PAVE MILLING & TEXTURING	73,100.00	TON		$	
0050	02696		SHOULDER RUMBLE STRIPS-SAWED	98,125.00	LF		$	
0060	21001ES400		CL4 ASPH SURF 0.38D PG64-22	2,000.00	TON		$	

Section: 0002 - ROADWAY

LINE	BID CODE	ALT	DESCRIPTION	QUANTITY	UNIT	UNIT PRICE	FP	AMOUNT
0070	01020		PERF PIPE HEADWALL TY 1-4 IN	16.00	EACH		$	
0080	02014		BARRICADE-TYPE III	4.00	EACH		$	
0090	02562		TEMPORARY SIGNS	350.00	SQFT		$	
0100	02650		MAINTAIN & CONTROL TRAFFIC	1.00	LS		$	
0110	02654		TRUCK MOUNTED ATTENUATOR	2.00	EACH		$	
0120	02671		PORTABLE CHANGEABLE MESSAGE SIGN	4.00	EACH		$	
0130	02676		MOBILIZATION FOR MILL & TEXT	1.00	LS		$	
0140	02775		ARROW PANEL	4.00	EACH		$	
0150	04793		CONDUIT-1 1/4 IN	330.00	LF		$	
0160	04795		CONDUIT-2 IN	240.00	LF		$	
0170	04811		ELECTRICAL JUNCTION BOX TYPE B	3.00	EACH		$	
0180	04820		TRENCHING AND BACKFILLING	500.00	LF		$	
0190	04829		PIEZOELECTRIC SENSOR	30.00	EACH		$	
0200	04830		LOOP WIRE	13,686.00	LF		$	
0210	04850		CABLE-NO. 14/1 PAIR	855.00	LF		$	
0220	04871		POLE 35 FT WOODEN	1.00	EACH		$	
0230	04895		LOOP SAW SLOT AND FILL	2,588.00	LF		$	
0240	04899		ELECTRICAL SERVICE	1.00	EACH		$	
0250	06427		TRENCHING	2,160.00	LF		$	
0260	06511		PAVE STRIPING-TEMP PAINT-6 IN	86,000.00	LF		$	
0270	06565		PAVE MARKING-THERMO X-WALK-6 IN	426.00	LF		$	
0280	06568		PAVE MARKING-THERMO STOP BAR-24IN	82.00	LF		$	
0290	06574		PAVE MARKING-THERMO CURV ARROW	8.00	EACH		$	
0300	10020NS		FUEL ADJUSTMENT	42,183.00	DOLL	$1.00	$	$42,183.00
0310	10030NS		ASPHALT ADJUSTMENT	105,950.00	DOLL	$1.00	$	$105,950.00
0320	20071EC		JOINT ADHESIVE	211,548.00	LF		$	
0330	20359NN		GALVANIZED STEEL CABINET	6.00	EACH		$	
0340	20360ES818		WOOD POST	12.00	EACH		$	
0350	20391NS835		ELECTRICAL JUNCTION BOX TYPE A	10.00	EACH		$	
0360	21543EN		BORE AND JACK CONDUIT	140.00	LF		$	
0370	23206EC		INSTALL CONTROLLER CABINET	1.00	EACH		$	
0380	24189ER		DURABLE WATERBORNE MARKING-6 IN W	96,500.00	LF		$	
0390	24190ER		DURABLE WATERBORNE MARKING-6 IN Y	57,700.00	LF		$	
0400	24191ER		DURABLE WATERBORNE MARKING-12 IN W	1,500.00	LF		$	
0410	24489EC		INLAID PAVEMENT MARKER	6,410.00	EACH		$	

141266

PROPOSAL BID ITEMS

Report Date 9/4/14

Section: 0003 - DEMOBILIZATION &/OR MOBILIZATION

LINE	BID CODE	ALT	DESCRIPTION	QUANTITY	UNIT	UNIT PRICE	FP	AMOUNT
0420	02568		MOBILIZATION	1.00	LS		$	
0430	02569		DEMOBILIZATION	1.00	LS		$	