TRANSPORTATION CABINET
DEPARTMENT OF HIGHWAYS
FRANKLIN COUNTY

CAPITAL PLAZA - WEST FRANKFORT CONNECTOR (MERO STREET) OVER THE KENTUCKY RIVER

REFERENCES:

STANDARD DRAWINGS AND SPECIAL PROVISIONS LISTED BELOW ARE THE CURRENT EDITIONS, AND ARE TO BE USED WITH THESE PLANS.

STANDARD DRAWINGS:

BGX-006-04 STENCIL CONSTRUCTION DATE FOR BRIDGES.
BHA-011-03 PEDESTRIAN ALUMINUM HANDRAIL
BHA-012-03 PEDESTRIAN ALUMINUM HANDRAIL
BJE-001-05 ARMORED EDGE FOR CONCRETE

SPECIAL PROVISIONS:

04G (85) WELDING STEEL BRIDGES
35A (85) NEOPRENE EXPANSION JOINTS
38F (85) BUY AMERICA AND CARGO PREFERENCE
53 (85) PRICE ADJUSTMENT FOR PORTLAND CEMENT
54A (85) CONCRETE PLANT QUALITY CONTROLS
69B (85) SELECT GRANULAR EMBANKMENT AND EARTH CORE AT END BENT STRUCTURES

SPECIAL NOTES:

SPECIAL NOTES FOR DRILLED CAISSONS
SPECIAL NOTES FOR LOCATION & REPAIR OF SEWER LINES
SPECIAL NOTES FOR STEEL FORMS FOR CAISSON CAP & PIER
SPECIAL NOTES FOR PRECAST POST-TENSIONED PIERS
SPECIAL NOTES FOR POST-TENSIONING SYSTEM
SPECIAL NOTES FOR PIER SHAFT SEGMENT GROUT
SPECIAL NOTES FOR PLACEMENT OF GIRDERS ON ELASTOMERIC BEARINGS
SPECIAL NOTES FOR LIGHTWEIGHT CONCRETE FILL
SPECIAL NOTES FOR RESIN BONDED REINFORCING BARS
SPECIAL NOTES FOR MASONRY COATING CONCRETE FINISH
SPECIAL NOTES FOR EPOXY COATED REINF. BARS INSTALLATION MATERIALS
SPECIAL NOTES FOR CLASS D AND D MODIFIED CONCRETE

NOTE: FOR CHARPY V-NOTCH TOUGHNESS TEST REQUIREMENTS, SEE GENERAL NOTES, SHEET 3.

NOTICE TO CONTRACTOR REGARDING THE OPENING OF THE FLOOD PROTECTION LEVEE AND EMERGENCY CLOSURE:
SUFFICIENT MATERIAL SHALL BE STOCK PILED SO THAT IF HIGH WATER OCCURS, THE CONTINUITY OF THE FLOOD PROTECTION CAN BE MAINTAINED.

WARNING

IF THIS BRIDGE HAS THE DECK SLAB REPLACED THE END SPANS MUST BE SUPPORTED IN ACCORDANCE WITH DETAILS ON SHEETS 32A & 32B OF THE DETAIL PLANS.

AMERICAN ENGINEERING CO.
CONSULTING ENGINEERS
LEXINGTON, KENTUCKY

STATE OF KENTUCKY — WILLIAM B. CAROLAND 6450 — REGISTERED PROFESSIONAL ENGINEER

Signed: William B. Carroland Date: 5/14/87

✳ FSP 037 0127 006-009 02 D

Capital Plaza - West Frankfort Connector (Mero Street) Over The Kentucky River SHEET 1 OF 45

COMMONWEALTH OF KENTUCKY
DEPARTMENT OF HIGHWAYS
FRANKFORT
COUNTY OF
FRANKLIN
CAPITAL PLAZA WEST FRANKFORT CONNECTOR ROAD
STATION 153+50.00 P.E. PROJECT NO. ✳

CONSTRUCTION PROJECT NO.	MAINTENANCE PROJECT NO.	DRAWING NO.
F 127-1(46)		21450

AMERICAN ENGINEERING CO. CONSULTING ENGINEERS LEXINGTON, KENTUCKY
UPDATE DATE
LETTING DATE 6-19-87

DESIGNED BY DCO	CHECKED BY WBC	DATE 9/86	REVISED
DETAILED BY ALF	CHECKED BY DCO	DATE 9/86	REVISED
TRACED BY	CHECKED BY	DATE	REVISED

AMERICAN ENGINEERING CO.
CONSULTING ENGINEERS
LEXINGTON, KENTUCKY

UPDATE DATE
LETTING DATE

DESIGNED BY DCD CHECKED BY NBC DATE 9-86
DETAILED BY TLL CHECKED BY DCD DATE 9-86
TRACED BY CHECKED BY DATE
REVISED - Corrected Lightweight Concrete Fill Quantity.
REVISED Exp Dam Qty & Note DATE 02/27/87
REVISED △Added Sht #22B, Revised Pier Details DATE 11/9/87
REVISED Revised Rev. Quantity - Pier AA-B" - 2 & 3 DATE 2/5/87
FHWA-G-10-88

REFERENCE AND ESTIMATE OF QUANTITIES

LOCATION \ ITEM	SHEET NUMBER	CLASS A CONCRETE	CLASS AA CONCRETE	ALT "A" PIERS 1 & 2 ***	ALT "B" PIERS 1 & 2 ***	CONCRETE OVERLAY PORTLAND CEMENT	REINF. STEEL	REINF. STEEL EPOXY COATED	PRE-STRESSED DECK SEGMENTS	STRUCTURE EXCAVATION COMMON	CYCLOPEAN STONE SLOPE PROTECTION	MARINE CAISSONS: DRILLED THRU EARTH & WATER	MARINE CAISSONS: DRILLED THRU SOLID ROCK	LAND CAISSONS - DRILLED THROUGH: EARTH - CAST WITHOUT SHELLS	LAND CAISSONS: EARTH - CAST USING SHELLS	LAND CAISSONS: EARTH - USING BENTONITE SLURRY	LAND CAISSONS: SOLID ROCK DRY HOLE	LAND CAISSONS: SOLID ROCK USING BENTONITE SLURRY	STEEL PILES HP 14 x 89: TEST PILE	STEEL PILES HP 14 x 89: FURNISH & DRIVE	NEOPRENE EXPANSION DAM 4"	STRUCTURAL STEEL	ELASTOMERIC BRG PAD 14" x 21" x 8 13/32"	ELASTOMERIC BRG PAD 33" x 33" x 3 2/32"	LIGHT-WEIGHT CONCRETE FILL	NAVIGATION LIGHTING	PEDEST. ALUMINUM HANDRAIL	LOCATE SEWER LINES	APPROACH SLAB
		CU. YDS.	CU. YDS.	L.S.	L.S.	CU. YDS.	LBS.	LBS.	EACH	CU. YDS.	TONS	LIN. FT.	LIN. FT.	LIN. FT.	LIN. FT.	LIN. FT.	LIN. FT.	LIN. FT.	LIN. FT.	LIN. FT.	LIN. FT.	LUMP SUM	EACH	EACH	CU. YDS.	LUMP SUM	LIN. FT.	LUMP SUM	SQ. YDS.
TITLE AND QUANTITIES	1-2																													
GENERAL NOTES	3-4																													
COAST GUARD PERMIT INFORMATION	5a, 5b, 5c																													
HYDROGRAPHS	6-7																													
SUBSURFACE DATA	8-10																													
LAYOUT	11																													
PILE & CAISSON RECORDS AND LAYOUT	12																													
ABUTMENT 1	13-18	145.5	25.8			9.2	15,859	1,351		134	3,842																			
PRESTRESSED DECK SEGMENTS	19								5										55	537			4							
PIERS 1 & 2 (ALTERNATES A & B)	20-22A			1	1							213	32																	
Pier 2 Details △	22B																							8						
ABUTMENT 2	23-26	212.2	32.0				15,920	1,493		198	5,666			165 *	165 *	165 *	9 *	9 *												
RETAINING WALLS A & B	27-30	196.2	31.5				14,566	7,061		845				240 *	240 *	240 *	12 *	12 *					4		1,474.9					
STRUCTURAL STEEL	31-35																								1,485.0					
SUPERSTRUCTURE	36-38		885.9					249,852														①								
CONSTRUCTION ELEVATIONS	39-40																										792.0			
NEOPRENE EXPANSION DAM 4"	41-41A																				77.0									
SUPERSTRUCTURE LIGHTING	42																				(64.0) **									
NAVIGATION LIGHTING	43																									1				
14" STRUCTURAL STEEL PILE @ 89 LBS.	44																													
APPROACH SLAB	45																													115.4
SUB-TOTAL SUPERSTRUCTURE			885.9					249,852													77.0									
SUB-TOTAL SUBSTRUCTURE		553.9	89.3	1	1	9.2	46,345	9,905	5	1,177	9,508	213	32	405 *	405 *	405 *	21 *	21 *	55	537	(64.0) **	①	8	8		1	792.0			
TOTAL		553.9	975.2	1	1	9.2	46,345	259,757	5	1,177	9,508	213	32	405 *	405 *	405 *	21 *	21 *	55	537	77.0				1,474.9			1	115.4
																					(64.0) **	①	8	8	1,474.9	1	792.0	1	115.4
																									1,485.0					

*** NOTE:
THESE PLANS PROVIDE TWO DESIGNS FOR PIERS 1 & 2, THE PROPOSED PRECAST POST-TENSIONED SHAFT AND CAP DESIGN AND AN ALTERNATE CAST-IN-PLACE SHAFT AND CAP DESIGN. THE CONTRACTOR SHALL BID ON ONLY ONE ALTERNATE ("A" OR "B"). THE LUMP SUM BIDS FOR PIERS 1 & 2 (ALTERNATES "A" AND "B" SHALL INCLUDE THE QUANTITES LISTED BELOW:

ALT. "A"-PROPOSED PIER DESIGN: (PRECAST POST-TENSIONED SHAFT AND CAP)
CLASS A CONCRETE △ 240.2 ~~219.2~~ CU. YDS.
REINFORCING STEEL △ 10,121 ~~11,104~~ LBS.
CLASS D-MODIFIED CONCRETE (INCLUDING INCIDENTAL POST-TENSIONING MATERIALS, ETC.) 177.8 CU. YDS.

ALT. "B"-ALTERNATE PIER DESIGN: (CAST-IN-PLACE SHAFT AND CAP)
CLASS A CONCRETE △ 424.8 ~~397.8~~ CU. YDS.
REINFORCING STEEL △ (81,555) ~~76,538~~ LBS.
81,282

* Method of drilling caissons will be determined by field conditions. For obtaining bid prices, the anticipated drilling lengths have been divided equally among the methods. Payment will be at the unit bid price for the method(s) actually used.

** PAY LIMIT FOR 4" NEOPRENE EXPANSION DAM IS GUTTER LINE TO GUTTER LINE.
~~NOTE THAT THE EXPANSION DAM SHALL EXTEND TO THE OUTSIDE EDGE OF THE SIDEWALK.~~
AND BACK OF BARRIER TO EDGE OF SIDEWALK, SEE SHEET #41.

① APPROX. WEIGHT OF STRUCTURAL STEEL IS 1,230,080 LBS.
WEIGHT INCLUDES: A588/A572 STEEL - 1,154,330 LBS.
A36 STEEL (INCL. DRAINS & MISC.) - 72,630 LBS.
SHEAR STUDS (3184 STUDS) - 3,120 LBS.

② INCIDENTAL TO CLASS "AA" CONCRETE

③ INCIDENTAL TO CLASS "A" CONCRETE

④ INCIDENTAL TO PRESTRESSED DECK SEGMENT

⑤ INCIDENTAL TO STRUCTURAL STEEL

BILL OF INCIDENTAL MATERIALS

ITEM	NO.	DESCRIPTION	LOCATION	
ANCHOR DOWELS	20	1" Ø x 2'-0"	ABUTMENT 1	③
ELASTOMERIC BEARING PAD	2	1"x18" NON-SHIMMED	ABUTMENT 1	④
POLYSULFIDE SEALER	83 LF	SEE SHEET 17	ABUTMENT 1	④
2" PREFORMED JOINT SEAL	153LF	SEE SHEET 17	ABUTMENT 1	④
THREADED BARS	60	½" Ø EPOXY COATED	ABUTMENT 1	④
6" P.V.C. PIPE	33 LF	SCUPPER DRAIN SYSTEM	ABUTMENT 1	⑤
RIBBED WATERSTOP	518LF	9" x ⅜" WITH 1" BULB	ABUT.2 & RET. WALLS	③
SHEET PILING	460SF	PMA22 (SEE SHEET 30)	RETAINING WALLS A & B	③
SUPERSTRUCTURE LIGHTING	1	SEE SHEET 42	SUPERSTR. & BARRIERS	②
RESIN REINFORCING ANCHORS	1444	SEE SPECIAL NOTES	NORTH BARRIER RAIL	②
6" FIBERGLASS PIPE	38 LF	SEE GEN.NOTE"DRAIN DETAILS"	SUPERSTR. DRAINS	⑤

Capital Plaza - West Frankfort Connector
(Mero Street) Over The Kentucky River SHEET 2

COMMONWEALTH OF KENTUCKY
DEPARTMENT OF HIGHWAYS
FRANKFORT
COUNTY OF
FRANKLIN
CAPITAL PLAZA-WEST FRANKFORT CONNECTOR ROAD

STATION 153+50.00 P.E.PROJECT NO.

CONSTRUCTION PROJECT NO.	MAINTENANCE PROJECT NO.	DRAWING NO.
		21450

BRUNING 44-132 65827

UPDATE DATE

LETTING DATE

DATE DATE DATE

DESIGNED BY W.B.C. CHECKED BY R.H.C. DATE 6-86 REVISED

DETAILED BY D.S.S. CHECKED BY D.C.D. DATE 6-86 REVISED

TRACED BY CHECKED BY DATE REVISED

SHEET

SPECIFICATIONS

THE KENTUCKY DEPARTMENT OF HIGHWAYS STANDARD SPECIFICATIONS FOR ROAD AND BRIDGE CONSTRUCTION, CURRENT EDITION SHALL APPLY TO THIS PROJECT.

DESIGN LOAD

THIS BRIDGE IS DESIGNED FOR HS20-44 LIVE LOAD, AS SPECIFIED IN 1985 AASHTO SPECIFICATIONS. THIS BRIDGE IS DESIGNED FOR A WIND LOAD BASED ON A WIND VELOCITY OF 84 MPH.

DESIGN METHOD

ALL REINFORCED CONCRETE MEMBERS ARE DESIGNED BY THE LOAD FACTOR METHOD AS SPECIFIED IN THE CURRENT AASHTO SPECIFICATIONS.

MATERIAL DESIGN SPECIFICATIONS

FOR CLASS "A" REINFORCED CONCRETE	F'C = 3,500 PSI
FOR CLASS "AA" REINFORCED CONCRETE	F'C = 4,000 PSI
FOR CLASS "D" MODIFIED PRECAST CONCRETE	F'C = 5,000 PSI
FOR CLASS "E" REINFORCED CONCRETE (SEE SPECIAL NOTES)	F'C = 4,000 PSI
FOR STEEL REINFORCEMENT	FY = 60,000 PSI
FOR STRUCTURAL STEEL (GIRDERS)	FY = 50,000 PSI
FOR STRUCTURAL STEEL (SECONDARY MEMBERS)	FY = 36,000 PSI

MATERIALS

ASTM SPECIFICATIONS, CURRENT EDITION, AS DESIGNATED BELOW SHALL GOVERN THE MATERIALS FURNISHED.

MATERIAL	ASTM	AASHTO
STRUCTURAL STEEL	A36	M183
STRUCTURAL STEEL FOR PLATES TO 2" THICK	A572-GRADE 50	M223
STRUCTURAL STEEL FOR PLATES OVER 2" UP TO 4"	A588	M222
STUD SHEAR CONNECTORS, UNS G 1015	A108	M169
HIGH STRENGTH BOLTS, NUTS, AND WASHERS	A325	M164
DEFORMED STEEL BARS FOR CONCRETE REINFORCING	A615	M31
UNCOATED, SEVEN-WIRE STRAND FOR PRESTRESSING	A416	M203
HIGH-STRENGTH ALLOY BARS (GRADE 150)	A722	M205
WELDED WIRE FABRIC FOR CONCRETE REINFORCING	A185	M55
DRAINS	A48	

ALL FLANGE AND WEB MATERIAL, INCLUDING SPLICE PLATES, IN LONGITUDINAL PLATE GIRDERS SHALL MEET THE LONGITUDINAL CHARPY V-NOTCH TOUGHNESS TEST APPLICABLE TO ZONE 2, MINIMUM SERVICE TEMPERATURE FROM -1 DEG. F. TO -30 DEG. F., IN ACCORDANCE WITH THE FOLLOWING LISTING:

FOR A572 STEEL (UP TO 2", WELDED) - 25 FT. LB. @ 40 DEG. F.
FOR A588 STEEL (OVER 2" TO 4", WELDED) - 30 FT. LB. @ 40 DEG. F.

SAMPLING AND TESTING PROCEDURES SHALL BE IN ACCORDANCE WITH ASTM A673 CURRENT EDITION, UTILIZING (H) FREQUENCY TESTING. WHEN PLATE THICKNESS EXCEEDS 1 1/2", FREQUENCY OF TESTING SHALL BE (P).

HIGH STRENGTH LOW ALLOY STRUCTURAL STEEL

HIGH STRENGTH LOW ALLOY STRUCTURAL STEEL SHALL CONFORM TO AASHTO M-222 CURRENT EDITION, FOR GRADES A THRU G AND SHALL MEET SUPPLEMENTARY REQUIREMENTS S1 & S5 EXCEPT WHEN PLATE THICKNESS EXCEEDS 1-1/2", FREQUENCY OF TESTING SHALL THEN BE (P).

WHEN FURNISHING GRADES D AND E, ACCEPTANCE APPROVAL WILL NOT BE GRANTED UNTIL ADEQUATE DATA HAS BEEN SUPPLIED SHOWING THAT THE MATERIAL PRODUCED UNDER PRODUCTION CONTROL PROCEDURES FULLY MEETS THE CHARPY V-NOTCH REQUIREMENTS, MINIMUM ELONGATION REQUIREMENTS, AND WELDABILITY PROPERTIES. FREQUENCY OF TESTING AS SPECIFIED IN SUPPLEMENTARY REQUIREMENTS S1 SHALL BE (P) WHEN PLATE THICKNESS EXCEEDS 1-1/2".

MILL TEST REPORTS

NOTARIZED MILL TEST REPORTS SHALL BE FURNISHED IN TRIPLICATE TO THE DEPARTMENT SHOWING THAT ALL OF THE MATERIALS USED IN THE STRUCTURAL STEEL CONFORM TO THE REQUIREMENTS OF THE SPECIFICATIONS.

CONCRETE

CLASS "AA" CONCRETE IS TO BE USED THROUGHOUT THE SUPERSTRUCTURE AND BARRIER RAILS AND ABUTMENT BACKWALL ABOVE THE BRIDGE SEAT. CLASS "A" CONCRETE IS TO BE USED IN THE REMAINDER OF ABUTMENTS AND RETAINING WALLS, AND IN THE CAST-IN-PLACE SECTIONS OF THE PIER CAP. CLASS "D" MODIFIED CONCRETE IS TO BE USED IN THE PRECAST PIER CAP AND SHAFT SEGMENTS AND IN THE PRECAST DECK SEGMENTS AT ABUTMENT 1. CLASS "E" CONCRETE IS TO BE USED IN THE DRILLED CAISSONS (SEE SPECIAL NOTES).

SPIRAL COLUMN TIES

SPLICES FOR SPIRALS WHERE DESIRED BY THE CONTRACTOR SHALL BE MADE WITH A MINIMUM OF ONE AND ONE-HALF TURNS OF SPIRAL. NO ADDITIONAL PAYMENT WILL BE MADE FOR THESE SPLICES, AND THE COST WILL BE CONSIDERED INCIDENTAL TO THE COST OF THE DEVELOPED-LENGTH OF SPIRAL SHOWN ON THE PLANS. SPIRAL REINFORCEMENT SHALL MEET THE REQUIREMENTS OF SUB-SECTION 811.01 OF THE SPECIFICATIONS.

DRAIN DETAILS

FOUNDRY NOTE - ALL DRAINS SHALL BE GRAY IRON CASTINGS, ASTM A48, CURRENT EDITION, CLASS 30A. FOUNDRIES SHALL CAST AT LEAST TWO TEST BARS FROM EACH DAY'S PRODUCTION. THESE TEST BARS SHALL BE TESTED EITHER BY THE DIVISION OF MATERIALS OR BY THE FOUNDRIES' QUALITY CONTROL UNIT WHO SHALL FURNISH ACTUAL TEST RESULTS FOR EACH DATE OF MANUFACTURE OR LOT NUMBER. DRAINS SHALL BE PAINTED INSIDE AND OUT. COST OF DRAINS, PIPE, AND FITTINGS ARE TO BE INCLUDED IN THE LUMP SUM BID FOR STRUCTURAL STEEL.
THE DRAIN PIPE AND FITTINGS SHALL BE FILAMENT WOUND REINFORCED FIBERGLASS CONFORMING TO THE REQUIREMENTS OF ASTM-D2996 DESIGNATION CODE RTRP-11AE-5112. PIPE AND FITTINGS WITH CLASS C OR CLASS F LINERS ARE ALSO ACCEPTABLE.

WELDING SPECIFICATIONS

ALL WELDING AND WELDING MATERIALS EXCEPT FOR REINFORCEMENT, SHALL CONFORM TO AWS D1.1-85 "STRUCTURAL WELDING CODE". MODIFICATION AND ADDITIONS AS STATED ON THE PLANS, AASHTO 1983 STANDARD SPECIFICATIONS FOR WELDING OF STRUCTURAL STEEL HIGHWAY BRIDGES, WITH REVISIONS, AND SPECIAL PROVISION 4(85), CURRENT EDITION SHALL SUPERSEDE THE AWS SPECIFICATIONS.

SLOPE PROTECTION

SLOPE PROTECTION SHALL BE DRY CYCLOPEAN STONE SLOPE PROTECTION IN ACCORDANCE WITH THE PLANS AND SPECIFICATIONS.

OPTIONAL TYPES OF SHEAR CONNECTORS

THE CONTRACTOR SHALL USE ONE OF THE FOLLOWING OPTIONS THROUGHOUT THIS STRUCTURE:

OPTION 1 - 7/8" STUDS
OPTION 2 - 5" CHANNEL AT 6.7 LBS./FT.

THE MINIMUM LENGTH OF STUDS IS 5". PROVIDE THE NECESSARY LENGTH TO PENETRATE AT LEAST 2" ABOVE BOTTOM OF SLAB.

IF THE CONTRACTOR WISHES TO USE OTHER THAN 7/8" STUD SHEAR CONNECTORS SHOWN ON THE PLANS, THE PROPOSED ARRANGEMENT SHALL BE SUBMITTED FOR APPROVAL WITH THE SHOP PLANS.

HIGH STRENGTH BOLT CONNECTIONS

UNLESS OTHERWISE PROVIDED ON THE PLANS, ALL FIELD CONNECTIONS SHALL BE 7/8" DIAMETER HIGH STRENGTH BOLTS. OPEN HOLES SHALL BE 15/16" DIAMETER. ALL JOINTS ARE DESIGNED AS FRICTION TYPE CONNECTIONS. TIGHTENING SHALL BE DONE WITH PROPERLY CALIBRATED WRENCHES.

PRESTRESSING REINFORCEMENT

PRESTRESSING STRANDS SHALL BE STABILIZED STRAND (1/2" NOMINAL DIAMETER 270 GRADE LOW-RELAXATION UNCOATED SEVEN-WIRE STRAND IN ACCORDANCE WITH ASTM A416).

UNCOATED SEVEN-WIRE STRESS-RELIEVED STRAND IN ACCORDANCE WITH AASHTO M 203 GRADE 270 MAY BE USED INSTEAD OF STABILIZED. HOWEVER, IF THE STRESS-RELIEVED STRAND ALTERNATE IS CHOSEN, THE CONSULTANT THAT DEVELOPED THESE PLANS SHALL PROVIDE THE DESIGN FOR THE STRESS-RELIEVED STRAND AND ALSO REVISE THE ORIGINAL PLANS TO REFLECT THE CHANGES.

THIS DESIGN AND PLAN MODIFICATION SHALL BE DONE AT THE CONTRACTOR'S EXPENSE. COST OF THE PRESTRESSING STRAND IS INCLUDED IN THE COST OF THE PRESTRESSED BEAM.

POST-TENSIONING BARS SHALL BE THREADED BARS OF THE NOMINAL DIAMETER SHOWN ON THE PLANS. THREADED BARS AND ANCHOR NUTS SHALL BE HIGH-STRENGTH ALLOY BARS CONFORMING TO ASTM A722, GRADE 150.

ELASTOMERIC BEARING PADS

THE MATERIAL SPECIFICATIONS FOR ELASTOMERIC BEARING PADS SHALL CONFORM TO THE AASHTO STANDARD SPECIFICATIONS FOR HIGHWAY BRIDGES EXCEPT THAT THE REQUIREMENT OF THE LOW TEMPERATURE TEST IS WAIVED AND A DUROMETER HARDNESS OF 50 OR 60 IS REQUIRED.

REINFORCEMENT

DIMENSIONS SHOWN FROM THE FACE OF CONCRETE TO BARS ARE CLEAR DISTANCES UNLESS OTHERWISE SHOWN. SPACING OF BARS IS FROM CENTER TO CENTER OF BARS.

EPOXY COATED REINFORCING STEEL

ALL REINFORCING BARS DESIGNATED BY SUFFIX (E) IN THE PLANS SHALL BE EPOXY COATED IN ACCORDANCE WITH SECTION 811.10 OF THE STANDARD SPECIFICATIONS.

BEVELED EDGES

ALL EXPOSED EDGES SHALL BE BEVELED 7/8" UNLESS OTHERWISE SHOWN.

BILL OF INCIDENTAL MATERIAL

THE QUANTITIES SHOWN IN THE BILL OF INCIDENTAL MATERIALS ARE APPROXIMATE ONLY AND THE CONTRACTOR IS RESPONSIBLE FOR FURNISHING ENOUGH MATERIAL TO COMPLETE THE WORK IN ACCORDANCE WITH THE PLANS AND SPECIFICATIONS. THE COST OF THESE ITEMS IS TO BE INCLUDED IN THE UNIT PRICE BID FOR THE ITEMS SPECIFIED.

STUD WELDING

STUDS SHALL BE WELDED WITH APPROVED WELDING EQUIPMENT.

DIMENSIONS

DIMENSIONS ARE FOR A NORMAL TEMPERATURE OF 60 DEGREES FAHRENHEIT. LAYOUT DIMENSIONS ARE HORIZONTAL MEASUREMENTS.

WELDING PROCEDURE

QUALIFICATION TESTS OF ALL WELDING PROCEDURES, WHICH ARE NOT AWS PREQUALIFIED, SHALL BE COMPLETED BY THE CONTRACTOR AND APPROVED BY THE ENGINEER PRIOR TO THE FINAL APPROVAL OF THE SHOP DRAWINGS AND WELDING PROCEDURE AND THE START OF THE FABRICATION.

PROHIBITED FIELD WELDING

EXCEPT AS SHOWN ON THE PLANS, NO WELDING OF ANY NATURE SHALL BE PERFORMED ON THE LOAD CARRYING MEMBERS OF THE BRIDGE WITHOUT THE WRITTEN CONSENT OF THE DIRECTOR, DIVISION OF BRIDGES, OR HIS AUTHORIZED REPRESENTATIVE, AND THEN ONLY IN THE MANNER AND AT THE LOCATIONS DESIGNATED IN THE AUTHORIZATION.

FOUNDATION PRESSURE

ABUTMENT 1 PILES ARE DESIGNED FOR A MAXIMUM AXIAL LOAD OF 114 TONS PER PILE.

PIER 1 AND 2 CAISSONS ARE DESIGNED FOR A MAXIMUM AXIAL LOAD OF 50 TONS PER SQUARE FOOT.

ABUTMENT 2 AND RETAINING WALL CAISSONS ARE DESIGNED FOR A MAXIMUM AXIAL LOAD OF 50 TONS PER SQUARE FOOT.

PILING

PILING SHALL BE DRIVEN TO REFUSAL OR TO SOLID ROCK.

TEST PILES SHALL BE DRIVEN WHERE DESIGNATED ON THE PLANS TO DETERMINE THE LENGTH OF PILE REQUIRED.

ALL TEST PILES SHALL BE ACCURATELY LOCATED SO THAT THEY MAY BE USED IN THE FINISHED STRUCTURE.

CLEANING AND PAINTING

SECTION 607.25 OF THE SPECIFICATIONS APPLIES TO THIS PROJECT AND CONTRACTORS ARE HEREBY REMINDED THAT IN ACCORDANCE WITH THAT SECTION ALL STEEL SURFACES TO BE PAINTED, INCLUDING EXPOSED SURFACES OF SPLICE PLATES, NUTS, BOLTS, AND WASHERS, SHALL BE BLAST CLEANED TO A NEAR-WHITE CONDITION IN ACCORDANCE WITH SSPC-SP10 IMMEDIATELY PRIOR TO BEING PAINTED WITH THE FIRST COAT OF PAINT, REGARDLESS OF WHETHER THE FIRST COAT IS APPLIED IN THE SHOP OR IN THE FIELD.

APPROACH SLAB

THE UNIT PRICE BID PER SQUARE YARD OF APPROACH SLAB SHALL INCLUDE THE COST OF ALL CLASS "AA" CONCRETE, REINFORCEMENT, 4" DGA, LABOR AND EQUIPMENT NECESSARY TO CONSTRUCT THE APPROACH SLAB.

CONSTRUCTION PERMIT

CONTRACTOR SHALL BE RESPONSIBLE FOR OBTAINING A PERMIT FROM THE CORPS OF ENGINEERS BEFORE ANY PART OF THE FLOODWALL AT THE SOUTHEAST END OF THE BRIDGE IS DISTURBED.

GENERAL NOTES

Capital Plaza-West Frankfort Connector
(Mero Street) Over The Kentucky River SHEET 3

COMMONWEALTH OF KENTUCKY
DEPARTMENT OF HIGHWAYS
FRANKFORT
COUNTY OF
FRANKLIN
CAPITAL PLAZA-WEST FRANKFORT CONNECTOR ROAD

STATION 153+50.00 P. E. PROJECT NO.

CONSTRUCTION PROJECT NO.	MAINTENANCE PROJECT NO.	DRAWING NO.
		21450

UPDATE DATE
LETTING DATE

PIER CONSTRUCTION

NO COFFERDAMS WILL BE PERMITTED FOR PIER CONSTRUCTION DUE TO THE EXISTENCE OF 3 - 14" HIGH PRESSURE SEWER LINES WHICH RUN IN CLOSE PROXIMITY TO THE PIERS ON MERO STREET.

INSTEAD A STEEL CAISSON CAP FORM SHALL BE FABRICATED WITH HOLES THRU THE BOTTOM TO ACCOMODATE THE STEEL CAISSON SHELLS. THIS FORM SHALL BE BUILT IN AT LEAST THREE SECTIONS AND MADE WATER TIGHT. THE FORM SHALL BE POSITIONED IN THE RIVER IN THE CORRECT LOCATION AND SUPPORTED BY SPUD BARGES. CAISSON SHELLS SHALL BE LOWERED THRU THE HOLES IN THE FORM BOTTOM TO THE RIVER BOTTOM AND THE SHELLS DRILLED INTO BED ROCK SO THEY MAY BE SEALED OFF, DEWATERED, REINFORCEMENT LOWERED INTO PLACE AND CONCRETE POURED.

PIER SHAFT AND CAP TO BE PRECAST POST-TENSIONED (SEE SPECIAL NOTES), OR CAST-IN-PLACE AS AN ALTERNATE (SEE PLANS).

CAISSON CAP CONSTRUCTION

AFTER ALL FOUR CAISSONS IN THE PIER CAP HAVE BEEN CONSTRUCTED A SEALING GASKET SHALL BE PLACED AROUND EACH CAISSON AT THE CAP FORM, SO THAT THE CAP FORM MAY BE DEWATERED AND THE CAP CONCRETE CAST (SEE SPECIAL NOTES).

PRECAST PRESTRESSED DECK SEGMENTS

THE ABUTMENT 1 DECK SEGMENTS ARE TO BE PRECAST PRESTRESSED AND POST-TENSIONED IN PLACE.

NO BOND STRESS SHALL BE TRANSFERRED TO THE CONCRETE, NOR SHALL END ANCHORS BE RELEASED, UNTIL THE CONCRETE HAS ATTAINED A COMPRESSIVE STRENGTH AS SHOWN BY STANDARD CYLINDERS MADE AND CURED IDENTICALLY WITH THE GIRDERS, OF AT LEAST A MINIMUM STRENGTH OF 4,000 PSI. CYLINDER STRENGTH SHALL BE 5,000 PSI BEFORE BRIDGE IS OPEN TO TRAFFIC. AN INITIAL FORCE SHALL BE APPLIED TO EACH LOW RELAXATION STRAND SUCH AS TO DEVELOP A STRESS OF 202,500 PSI. BEAMS WITH HONEYCOMB OF SUCH EXTENT AS TO EFFECT THE STRENGTH OR RESISTANCE TO DETERIORATION WILL NOT BE ACCEPTED. AN ALLOWANCE OF .0005L SHALL BE MADE FOR SHORTENING OF BEAMS DUE TO SHRINKAGE AND ELASTIC CHANGE. SHOP PLANS SHALL SHOW A DETENSIONING PLAN BY NUMBERING IN SEQUENCE THE STRAND PATTERN.

COST OF PRESTRESSING AND POST-TENSIONING MATERIALS, LABOR AND EQUIPMENT NECESSARY TO CONSTRUCT THE PRESTRESSED DECK SEGMENTS IN PLACE IS INCLUDED IN THE UNIT PRICE BID FOR PRESTRESSED DECK SEGMENTS.

SHOP PLANS FOR PRECAST CONCRETE MEMBERS

SHOP PLANS SHALL BE IN ACCORDANCE WITH SUB-SECTION 605.05 PART A OF THE SPECIFICATIONS. ADDITIONALLY, SHOP PLANS SHALL INCLUDE AN OUTLINE OF THE PRESTRESSING PROCEDURE FOR THE DRAPED STRANDS AND OF THE DETENSIONING PROCEDURE. SHOP PLANS SHALL INCLUDE A DIAGRAM OF CASTING BED LAYOUT. WHEN THE PULL DOWN METHOD IS USED, THE JACKING FORCE FOR DRAPED STRANDS TOGETHER WITH APPROPRIATE COMPUTATIONS SHALL ALSO BE SUBMITTED BY THE FABRICATOR.

ANCHOR BOLT HOLES

HOLES OF DEPTH AND DIMENSIONS SHOWN SHALL BE DRILLED FOR ANCHOR BOLTS OR DOWELS, AFTER BASE PLATES ARE PROPERLY SET, BY THE SUPERSTRUCTURE CONTRACTOR WHO SHALL BE RESPONSIBLE FOR KEEPING HOLES DRY IN FREEZING WEATHER. AFTER BASE PLATES ARE PROPERLY SET AND ANCHOR BOLT HOLES DRILLED, THE ANCHOR BOLTS SHALL BE GROUTED INTO THE HOLES USING AN EPOXY GROUT IN ACCORDANCE WITH SECTION 736 OF THE SPECIFICATIONS. THE COST OF ANCHOR DOWELS, DRILLING, GROUT, AND GROUTING OF THE ANCHOR DOWELS IS INCIDENTAL TO AND INCLUDED IN THE LUMP SUM BID FOR STRUCTURAL STEEL.

LIGHTWEIGHT CONCRETE FILL

THE BRIDGE APPROACH AT ABUTMENT 2 IS TO BE LIGHTWEIGHT CONCRETE FILL, EXTENDING FROM THE ABUTMENT BACKWALL TO THE END OF THE RETAINING WALLS. THE MATERIAL USED SHALL MEET THE REQUIREMENTS OF THE "SPECIAL NOTES FOR LIGHTWEIGHT CONCRETE FILL".

DENSE CONCRETE OVERLAY

A DENSE CONCRETE OVERLAY SHALL BE PLACED ON THE ABUTMENT 1 PRECAST DECK SEGMENTS AFTER THE SEGMENTS AND BARRIERS ARE IN PLACE. THE DEPTH OF THE OVERLAY SHALL BE VARIED TO MATCH THE PROFILE GRADE. PLACEMENT OF THE OVERLAY SHALL BE IN ACCORDANCE WITH SECTION 617 OF THE SPECIFICATIONS FOR CONCRETE OVERLAY, PORTLAND CEMENT. CONTRARY TO THE SPECIFICATIONS, THE UNIT PRICE BID PER CUBIC YARD FOR CONCRETE OVERLAY, PORTLAND CEMENT, SHALL INCLUDE THE COST OF ALL BLAST CLEANING AND EPOXY-SAND SLURRY.

PAYMENT FOR STRUCTURAL STEEL

THE LUMP SUM BID FOR STRUCTURAL STEEL SHALL BE FULL PAYMENT FOR ALL STRUCTURAL STEEL, BOLTS, WASHERS, STUDS, WELDING AND WELDING MATERIALS, DRAINS, DRAIN PIPE, PAINT AND ALL LABOR AND MATERIALS NECESSARY TO ERECT THE STEEL IN ACCORDANCE WITH THE PLANS AND SPECIFICATIONS. THE APPROXIMATE WEIGHT OF STRUCTURAL STEEL SHOWN IN THE ESTIMATE OF QUANTITIES DOES NOT INCLUDE OVERRUN OR WELD MATERIAL.

PAINTING NEW STRUCTURAL STEEL — OUT

ALL NEW STRUCTURAL STEEL SHALL BE CLEANED AND PAINTED IN ACCORDANCE WITH SECTION 607.25 OF THE SPECIFICATIONS EXCEPT THE LAST TWO COATS OF PAINT SHALL BE GRAY INSTEAD OF ALUMINUM. THIS GRAY PAINT IS TO BE IN ACCORDANCE WITH THE SPECIAL NOTES FOR FINISH COAT. THE FIRST GRAY COAT OF PAINT IS TO BE TINTED WITH LAMP BLACK AS DIRECTED BY THE ENGINEER TO PROVIDE A CONTRAST IN THE TWO COATS. THE COST OF THIS CLEANING AND PAINTING SHALL BE INCLUDED IN THE LUMP SUM BID FOR STRUCTURAL STEEL.

TEMPORARY SUPPORTS

TEMPORARY SUPPORTS OR SHORING WILL NOT BE PERMITTED UNDER THE GIRDERS WHEN POURING THE CONCRETE FLOOR SLAB OR WHEN TAKING "TOP OF BEAM" ELEVATIONS.

SHOP DRAWINGS

THE CONTRACTOR SHALL SUBMIT FULL SETS OF PRINTS OF THE DETAILED SHOP DRAWINGS FOR ALL STRUCTURAL STEEL TO THE DEPARTMENT FOR REVIEW IN ACCORDANCE WITH SECTION 607.04 OF THE SPECIFICATIONS.

CAMBER

WEB PLATES SHALL BE CUT TO PROVIDE FOR THE CAMBER OF THE GIRDER. PROVIDE FOR POSSIBLE WARPAGE DUE TO EXTRA HEAT IN TOP FLANGE BY VIRTUE OF SHEAR CONNECTORS. GIRDERS WHICH DO NOT CONFORM TO PLAN CAMBER AND GRADE IN THE ERECTED POSITION SHALL BE CONSIDERED AS REQUIRING, AT NO ADDITIONAL COST TO THE STATE, EITHER AN ADJUSTMENT IN DEPTH OF THE CONCRETE SLAB HAUNCH OVER THE STEEL SUPPORTING MEMBERS OR A REWORKING OF THE GIRDER CAMBER TO MEET THE PLAN GRADE AND SLAB THICKNESS. HOWEVER, IN NO CASE SHALL THE SHEAR CONNECTORS BE ALLOWED TO PENETRATE THE SLAB LESS THAN TWO INCHES.

FALSEWORK PLANS

THE CONTRACTOR SHALL SUBMIT TO THE DIVISION OF CONSTRUCTION, FOR SUBMISSION TO THE U. S. COAST GUARD FOR APPROVAL AND TEMPORARY NAVIGATION LIGHTING REQUIREMENTS, SEVEN (7) SETS OF PRELIMINARY FALSEWORK PLANS SHOWING THE PLAN, ELEVATION, AND LOCATION OF ANY AND ALL COFFERDAMS, TEMPORARY FALSEWORK AND OTHER OBSTRUCTIONS TO BE USED IN CONNECTION WITH THE CONSTRUCTION OF THESE BRIDGES. ONE COPY SHOWING REQUESTED ALTERATIONS, IF ANY, WILL BE RETURNED TO THE CONTRACTOR BY THE DIVISION OF CONSTRUCTION.

THE CONTRACTOR SHALL SUBMIT TO THE DIVISION OF CONSTRUCTION FIVE (5) SETS OF FINAL FALSEWORK PLANS FOR FINAL DISTRIBUTION.

CONSTRUCTION IDENTIFICATION

THE NAMES OF THE PRIME CONTRACTOR AND THE SUB-CONTRACTOR SHALL BE IMPRINTED IN THE CONCRETE WITH ONE INCH LETTERS AT A LOCATION DESIGNATED BY THE ENGINEER. THE CONTRACTOR SHALL FURNISH ALL PLANS, EQUIPMENT AND LABOR NECESSARY TO DO THE WORK FOR WHICH NO DIRECT PAYMENT WILL BE MADE.

POURING SEQUENCE

THE POURING SEQUENCE OF THE SLAB MAY BE CHANGED WITH THE WRITTEN APPROVAL OF THE ENGINEER.

NAVIGATION CLEARANCES

ALL WORK SHALL BE CONDUCTED WITHOUT UNREASONABLE INTERFERENCE TO THE FREE NAVIGATION OF THE WATERWAY AND WITHOUT IMPAIRMENT TO THE PRESENT NAVIGATIONAL DEPTHS.

THE CHANNEL OR CHANNELS CROSSED BY THE STRUCTURE SHALL PROMPTLY BE CLEARED OF ALL FALSEWORK, PILING OR OTHER OBSTRUCTIONS PLACED THEREIN OR CAUSED BY THE CONSTRUCTION OF THE BRIDGE. THIS CLEARING OF THE CHANNEL SHALL BE DONE TO THE SATISFACTION OF THE U. S. COAST GUARD COMMANDANT AND THE DEPARTMENT OF HIGHWAYS AT SUCH TIME, WHEN IN THE ENGINEER'S JUDGEMENT, THE WORK HAS REACHED A POINT WHERE SUCH ACTION CAN BE TAKEN, BUT IN ANY CASE NOT LATER THAN 7 DAYS AFTER THE BRIDGE HAS BEEN OPENED TO TRAFFIC.

MASONRY COATING

A MASONRY COATING SHALL BE APPLIED TO THE EXPOSED CONCRETE SURFACES IN ACCORDANCE WITH SECTION 601.26 OF THE SPECIFICATIONS. ADDITIONALLY, THE COATING SHALL BE APPLIED TO THE SURFACES OF THE PIER CAP, SHAFT, AND CAISSON CAP ABOVE THE WATER LINE.

BRIDGE CLEARANCE GAUGES

BRIDGE CLEARANCE GAUGES SHALL BE INSTALLED ON PIERS 1 & 2 IN ACCORDANCE WITH THE INFORMATION ON SHEET 5c OF THESE PLANS. PAYMENT FOR THIS ITEM SHALL BE INCIDENTAL TO "NAVIGATION LIGHTING".

PAINT

THE BRIDGE SHALL BE PAINTED IN ACCORDANCE WITH SECTION 607.25 OF THE STD. SPECS.

GENERAL NOTES

Capital Plaza - West Frankfort Connector
(Mero Street) Over The Kentucky River SHEET 4

COMMONWEALTH OF KENTUCKY
DEPARTMENT OF HIGHWAYS
FRANKFORT
COUNTY OF
FRANKLIN
CAPITAL PLAZA-WEST FRANKFORT CONNECTOR ROAD

STATION 153+50.00 P.E. PROJECT NO.
CONSTRUCTION PROJECT NO. | MAINTENANCE PROJECT NO. | DRAWING NO. 21450

DESIGNED BY WBC CHECKED BY RHC DATE 6-86 REVISED Added correct "Paint" note - 8-8-P.
DETAILED BY DSB CHECKED BY DCD DATE 6-86 REVISED
TRACED BY CHECKED BY DATE REVISED
DATE 6-29-86

UPDATE DATE.....

LETTING DATE.....

U.S. Department of Transportation
United States Coast Guard

Commander
Second Coast Guard District

1430 Olive Street
St. Louis, MO 63103-2398
Staff Symbol: (obr)
Phone: 314-425-4607

RECEIVED
AUG 22 1986
DIVISION OF BRIDGES
FRANKFORT, KENTUCKY

16591.1/65.4 KYR
AUG 19 1986

Mr. Thomas R. Layman
Director, Division of Bridges
Commonwealth of Kentucky
Transportation Cabinet
Frankfort, KY 40622-0001

Subj: CAPITOL PLAZA-WEST FRANKFORT CONNECTOR DUAL BRIDGES, MILE 65.4, KENTUCKY RIVER

Dear Mr. Layman:

Your application of October 1, 1984 requesting approval of the location and plans for proposed dual bridges across the Kentucky River at Frankfort, Kentucky, has been approved. Bridge Permit No. 5-85-2 dated July 7, 1986 is enclosed.

It is essential that we be kept informed of any events that could affect navigation during construction of the bridge. Your representative should be specifically instructed to keep this office informed of the progress of construction with particular reference to any and all events that may have an effect on navigation. The information received regarding the work will be disseminated to mariners by radio and written notices.

Plans for cofferdams, temporary causeways, work bridges, falsework bents, or any other temporary structures that will be placed in the water to facilitate construction of this bridge must be approved by this office. Construction of this bridge must be accomplished with minimal interference with navigation. To this end, construction schedules, plans and erection schemes should be submitted to us at the earliest possible time so that approval can be assured prior to commencing work.

The U. S. Department of the Interior, Fish and Wildlife Service and the Kentucky Natural Resources and Environmental Protection Cabinet, Department for Environmental Protection, Division of Water, have asked us to inform you that certain precautions should be taken during construction; a copy of each agency's letter listing recommended conditions is enclosed.

Navigation lights and reflectors for the bridge are prescribed in enclosure (4). The lights, prescribed in accordance with Title 33, Code of Federal Regulations, Part 118, shall be installed at the locations and in the manner shown on the enclosed marked-up copies of the Permit drawings.

16591.1/65.4 KYR

Subj: CAPITOL PLAZA-WEST FRANKFORT CONNECTOR DUAL BRIDGES, MILE 65.4, KENTUCKY RIVER

You are required by Condition 4 of the Permit to install vertical clearance gauges. The gauges shall be installed as prescribed in enclosure (4). Enclosure (7) is a copy of Coast Guard instructions for installing vertical clearance gauges on bridges.

Please acknowledge receipt of the Permit. If you have any questions concerning our jurisdiction or requirements, you can contact us at 314-425-4607.

Sincerely,

ROGER K. WIEBUSCH
Bridge Administrator
By direction of the District Commander

Encl: (1) USCG Bridge Permit No. 5-86-2 dtd 7/7/86
(2) USDI, Fish and Wildlife Service dtd 11/18/85
(3) KNREPC ltr dtd 10/11/84
(4) Required navigation lights and gauges
(5) Marked-up permit dwg 2 of 4 (westbound)
(6) Marked-up permit dwg 3 of 4 (eastbound)
(7) Vertical clearance gauge instruction sheet

Copy: CDRUSAED Louisville Dist. (Permits Branch) w/encl (1)
CDRUSAED Ohio River Div.
FHWA Kentucky Div.
USCGC CHIPPEWA w/encls (4), (5) & (6)
CG MSO CINCINNATI
CG GP OER w/encls (4), (5) & (6)
USDI, Fish and Wildlife Svc., Cookville, TN
KNREPC, Frankfort, KY

U.S. Department of Transportation
United States Coast Guard

BRIDGE PERMIT

07 JUL 1986

(5-86-2)

WHEREAS by Title V of an act of Congress approved August 2, 1946, entitled "General Bridge Act of 1946," as amended (33 U.S.C. 525 533), the consent of Congress was granted for the construction, maintenance and operation of bridges and approaches thereto over the navigable waters of the United States;

AND WHEREAS the Secretary of Transportation has delegated the authority of Section 502(b) of that act to the Commandant, U. S. Coast Guard by Section 1.46(c) of Title 49 Code of Federal Regulations;

AND WHEREAS before construction is commenced, the Commandant must approve the location and plans of any such bridge and may impose any specific conditions relating to the construction, maintenance and operation of the structure which he deems necessary in the interest of public navigation, such conditions to have the force of law;

AND WHEREAS the COMMONWEALTH OF KENTUCKY has submitted for approval the location and plans of dual bridges to be constructed across the Kentucky River at Frankfort, Kentucky;

NOW THEREFORE, This is to certify that the location and plan sheets 1, 2 and 4 (of 4) dated September 1984 and sheet 3 revised 23 September 1985 are hereby approved by the Commandant, subject to the following conditions:

1. No deviation from the approved plans may be made either before or after completion of the structure unless the modification of said plans has previously been submitted to and received the approval of the Commandant.

2. The construction of falsework, pilings, cofferdams, or other obstructions, if required, and the scheme for constructing the bridges shall be in accordance with plans submitted to and approved by the Commander, Second Coast Guard District prior to construction of the bridges. All work shall be so conducted that the free navigation of the waterway is not unreasonably interfered with and the present navigable depths are not impaired. Timely notice of any and all events that may affect navigation shall be given to the District Commander during construction of the bridges. The channel or channels through the structures shall be promptly cleared of all obstructions placed therein or caused by the construction of the bridges to the satisfaction of the District Commander, when in the judgment of the District Commander the construction work has reached a point where such action should be taken, but in no case later than 90 days after the bridges have been opened to traffic.

07 JUL 1986

Continuation Sheet Bridges Across the Kentucky River at Frankfort, Kentucky

BRIDGE PERM

(5-86-2)

3. Issuance of this permit does not relieve the permittee of the obligation or responsibility for compliance with the provisions of any other law or regulation as may be under the jurisdiction of the U.S. Department of the Interior, Fish and Wildlife Service; Commonwealth of Kentucky, Department of Natural Resources and Environmental Protection Cabinet, or any other federal, state or local authority having cognizance of any aspect of the location, construction or maintenance of said bridges.

4. Clearance gauges shall be installed and maintained in a good and legible condition by and at the expense of the owner of the bridges. The type of gauges and the locations in which they are to be installed will be submitted to the District Commander for approval.

5. When the proposed bridges are no longer used for transportation purposes, they shall be removed in their entirety or to an elevation deemed appropriate by the District Commander and the waterway cleared to the satisfaction of the District Commander. Such removals and clearances shall be completed by and at the expense of the owner of the bridges upon due notice from the District Commander.

6. The approval hereby granted shall cease and be null and void unless construction of the bridge project is commenced within five years and completed within eight years after the date of this permit.

B. H. SEABROOKE
Captain, U. S. Coast Guard
Chief, Bridge Administration Division
By director of the Commandant

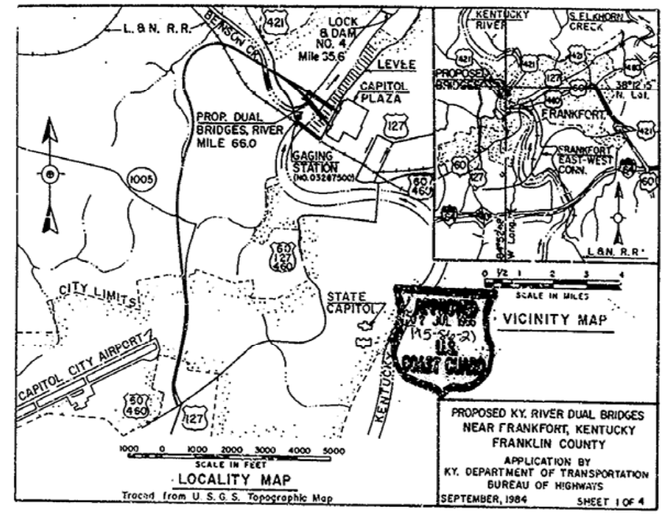

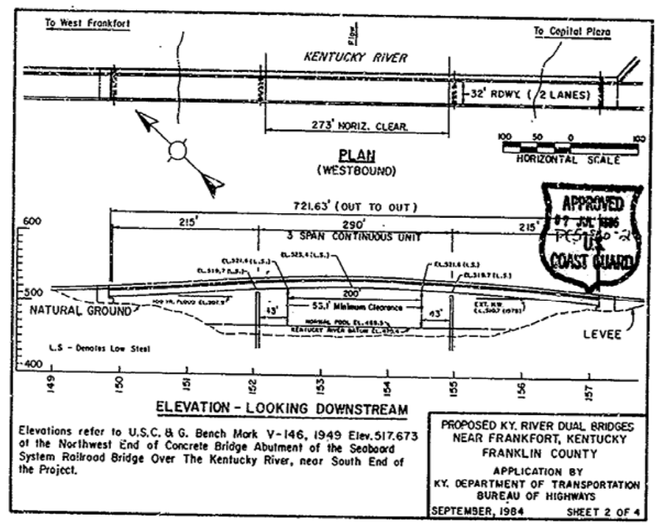

Capital Plaza-West Frankfort Connector
(Mero Street) Over The Kentucky River SHEET 5a

COMMONWEALTH OF KENTUCKY
DEPARTMENT OF HIGHWAYS
FRANKFORT
COUNTY OF
FRANKLIN
CAPITAL PLAZA WEST FRANKFORT CONNECTOR ROAD

STATION | P. E. PROJECT NO.

CONSTRUCTION PROJECT NO.	MAINTENANCE PROJECT NO.	DRAWING NO.
		21450

DESIGNED BY WBC DATE 7-86 REVISED
CHECKED BY DCD DATE 7-86 REVISED
DETAILED BY SWF DATE REVISED
CHECKED BY DATE
TRACED BY DATE
CHECKED BY DATE

COAST GUARD PERMIT

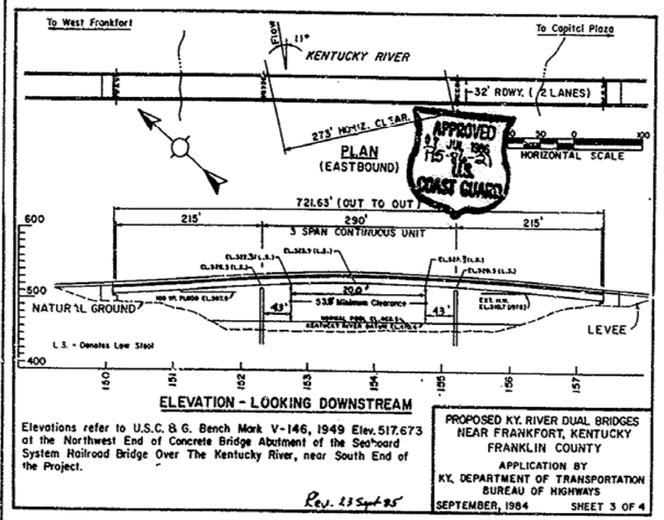

ELEVATION - LOOKING DOWNSTREAM

Elevations refer to U.S.C. & G. Bench Mark V-146, 1949 Elev. 517.673 at the Northwest End of Concrete Bridge Abutment of the Seaboard System Railroad Bridge Over The Kentucky River, near South End of the Project.

Rev. 23 Sept 85

PROPOSED KY. RIVER DUAL BRIDGES
NEAR FRANKFORT, KENTUCKY
FRANKLIN COUNTY
APPLICATION BY
KY. DEPARTMENT OF TRANSPORTATION
BUREAU OF HIGHWAYS
SEPTEMBER, 1984 SHEET 3 OF 4

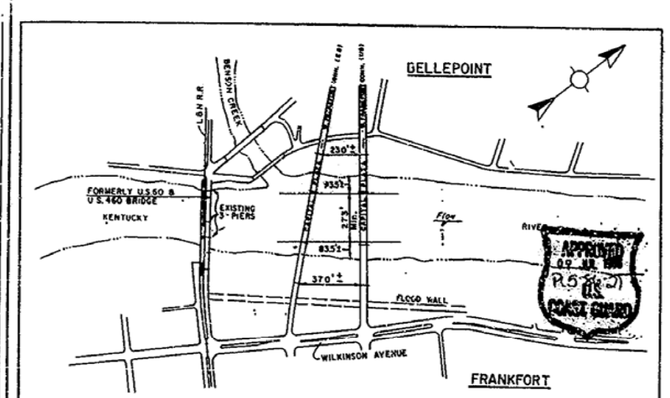

SKETCH SHOWING STREAM ALIGNMENT

SCALE: 1" = 400'

PROPOSED KY. RIVER DUAL BRIDGES
NEAR FRANKFORT, KENTUCKY
FRANKLIN COUNTY
APPLICATION BY
KY. DEPARTMENT OF TRANSPORTATION
BUREAU OF HIGHWAYS
SEPTEMBER, 1984 SHEET 4 OF 4

UPDATE DATE
LETTING DATE

DESIGNED BY WBC DATE 7-86 REVISED
DETAILED BY SWF CHECKED BY DCD DATE 7-86 REVISED
TRACED BY CHECKED BY DCD DATE REVISED

United States Department of the Interior
FISH AND WILDLIFE SERVICE
Post Office Box 845
Cookeville, TN 38501

RECEIVED
NOV 21 1985
2nd Coast Guard District
BRIDGE BRANCH

November 18, 1985

Mr. Roger K. Wiebusch, Bridge Administrator
United States Coast Guard
Second Coast Guard District, Bridge Branch
1430 Olive Street
St. Louis, Missouri 63103-2398

Dear Mr. Wiebusch:

This is in regard to your letter of October 1, 1985, concerning the Commonwealth of Kentucky Transportation Cabinet to construct dual bridges across the Kentucky River, Mile 66.0 at Frankfort, Franklin County, Kentucky. The Fish and Wildlife Service (FWS) has reviewed the information provided in your letter, and this report has been prepared and submitted under authority of and in accordance with the Fish and Wildlife Coordination Act (48 Stat. 401, as amended; 16 U.S.C. 661 et seq.).

According to the general description of the project, the applicant proposes to construct dual bridges that have westbound traffic lanes and eastbound traffic lanes. To accomplish this project, approximately 2,000 cubic yards of material will be excavated and 9,500 cubic yards of fill will be placed below the 100-year flood elevation (507.9 feet, msl).

Time and manpower constraints precluded an on-site investigation of the proposed project, however, based on the information provided by the public notice, we have determined that the primary concern of the FWS relates to erosion and the implementation of an adequate erosion control plan.

The use of heavy equipment along the streambank and in the stream during construction can result in increased accumulations of sediments in the stream. These accumulations could increase water temperatures, promote oxygen fluctuations, and cause higher than normal oxygen

ENCLOSURE(2)

demands. These impacts can be expected to extend over a large area downstream of the construction site.

It is the belief of the FWS that the previously discussed erosion and sedimentation could result in substantial adverse impacts to aquatic resources. To lessen the potential for these adverse impacts, we have identified the following management practices.

1. The project should include both temporary and permanent erosion and sedimentation control measures.

   a. Preventive planning: A well developed erosion and sediment control plan which entails a preliminary investigation, and final erosion and sediment control contingency measures should be formulated and made a part of the construction contract.

   b. Silt barriers: Appropriate use be made of silt fences, hay bale and brush barriers, and silt basins in streambank areas susceptible to erosion to prevent sediment from entering the stream.

2. Water quality practices be maintained during the construction and monitored, downstream of the activity site to avoid potential impacts downstream.

3. All areas disturbed during the course of the project should be stabilized as soon as practical.

If properly implemented and monitored, the above management practices should assure that the impacts of this proposal on fish and wildlife resources are minimal. Therefore, it is recommended that these practices be incorporated as conditions of the permit.

Thank you for this opportunity to comment.

Sincerely,

J. Mitch King
Acting Field Supervisor

JMK/TRC/r

CHARLOTTE E. BALDWIN
SECRETARY

MARTHA LAYNE COLLINS
GOVERNOR

COMMONWEALTH OF KENTUCKY
NATURAL RESOURCES AND ENVIRONMENTAL PROTECTION CABINET
DEPARTMENT FOR ENVIRONMENTAL PROTECTION
FORT BOONE PLAZA
18 REILY ROAD
FRANKFORT, KENTUCKY 40601

OCT 11 1984

Mr. Thomas R. Layman
Director, Division of Bridges
Transporation Cabinet
Frankfort, Kentucky 40622

Re: Water Quality Certification: U.S. Coast Guard Navigation Permit: Capital Plaza-West Frankfort Connector, dual bridges at Ky. River Mile Point 66.0; Franklin Co., KY.

Dear Mr. Layman:

Pursuant to Section 401 of the Clean Water Act, the Commonwealth of Kentucky certifies that it has reasonable assurances applicable water quality standards, under Kentucky Revised Statutes 224, as established pursuant to Sections 301, 302, 303, 306 and 307 of the Clean Water Act, will not be violated by the above referenced project provided:

1. The project is constructed in accordance with the latest approval edition of "Standard Specifications for Road and Bridge Construction" and Design Memorandum No. 4-79;

2. Upon completion, the District Engineer shall certify that construction met or exceeded applicable specifications.

3. Should evidence of water pollution occur as a result of this proposal, the Commonwealth shall be notified immediately and physical, chemical, and/or biological examination of the effected waters shall be conducted and reported. In such case(s), additional facilities or alternate engineering practices may be required.

ENCLOSURE(3)

Mr. Layman
Page Two

4. If construction does not commence within two years of the date of this letter, this certification will become void.

Sincerely,

Division of Water

PB:sjm

cc: DOW Files
Commander (obr)
Second Coast Guard District

NAVIGATION LIGHTS FOR
CAPITOL PLAZA - WEST FRANKFORT CONNECTOR DUAL BRIDGES
ACROSS KENTUCKY RIVER, MILES 65.4 AND 65.3 AT
FRANKFORT, FRANKLIN COUNTY, KENTUCKY

WESTBOUND BRIDGE, SHEET 2 OF 4 (DOWNSTREAM)

The center of the channel shall be marked by a range of two green lights. Each green light shall show through a horizontal arc of 360 degrees and shall be securely mounted just below the outermost edge of the bridge span structure in line with the axis of the channel so as to be visible from an approaching vessel.

The upstream and downstream sides of the channel piers shall be marked with red lights. Each red light shall show through a horizontal arc of 180 degrees and shall be securely mounted on the pier as low as practicable but not lower than two feet above navigable high water to show 90 degrees on either side of a line parallel to the axis of the channel so as to be visible from an approaching vessel.

The upstream and downstream sides of the channel piers shall be marked with red reflectors. The reflectors should be placed near the top of the piers on the columns or pier caps so as to effectively reflect the searchlight of an approaching vessel. The reflectors shall have a reflective area of not less than 36 square inches and not more than 144 square inches.

The center of the channel shall be marked with green reflectors. The reflectors should be placed near the mid-channel green lights on the upstream and downstream sides of the bridge so as to effectively reflect the searchlight of an approaching vessel. Each reflector shall have a reflective area of not less than 36 square inches and not more than 144 square inches.

EASTBOUND BRIDGE, SHEET 3 OF 4 (UPSTREAM)

The center of the channel shall be marked by a range of two green lights. Each green light shall show through a horizontal arc of 360 degrees and shall be securely mounted just below the outermost edge of the bridge span structure in line with the axis of the channel so as to be visible from an approaching vessel.

The upstream and downstream sides of the channel piers shall be marked with red lights. Each red light shall show through a horizontal arc of 180 degrees and shall be securely mounted on the pier as low as practicable but not lower than two feet above navigable high water to show 90 degrees on either side of a line parallel to the axis of the channel so as to be visible from an approaching vessel.

The upstream and downstream sides of the channel piers shall be marked with red reflectors. The reflectors should be placed near the top of the piers on the columns or pier caps so as to effectively reflect the searchlight of an approaching vessel. The reflectors shall have a reflective area of not less than 36 square inches and not more than 144 square inches.

The center of the channel shall be marked with green reflectors. The reflectors should be placed near the mid-channel green lights on the upstream and downstream sides of the bridge so as to effectively reflect the searchlight of an approaching vessel. Each reflector shall have a reflective area of not less than 36 square inches and not more than 144 square inches.

ENCLOSURE (4)

The lights and reflectors prescribed above shall be displayed from sunset to sunrise each night of the year and at other times when the visibility is less than one mile. The lights shall be of sufficient candlepower as to be visible against the background lighting at a distance of at least 2,000 yards 90% of the nights of the year.

Responsibility of the owner does not cease upon installation of the prescribed lights or reflectors. Provisions for maintaining all lights and reflectors prescribed herein should be included in the planning for initial installation. A continuing program of inspection and maintenance is necessary to insure that the lights and reflectors are properly displayed.

VERTICAL CLEARANCE GAUGE REQUIREMENT

The size of the numerals to be placed on the bridge piers depends on the width of the piers. The 36-inch, Series E standard numerals should be used unless the width of the piers is too narrow to accommodate that large a numeral. If the bridge piers are too narrow for the 36-inch numeral, then use the largest numeral that is compatible with the width of the pier. The gauges shall be installed on the upstream side of the right descending channel pier on the eastbound bridge and downstream side of the left descending channel pier on the westbound bridge. The line indicating the topmost numeral of the gauge shall be located six feet below the lowest point of steel in the channel span (low steel) considering both bridges. The line indicating the bottom numeral shall be located 45 feet below low steel.

Enclosure 4 to CGD TWO(obr) ltr dtd AUG 19 1986.

COAST GUARD PERMIT

Capital Plaza-West Frankfort Connector
(Mero Street) Over The Kentucky River SHEET 5b

COMMONWEALTH OF KENTUCKY
DEPARTMENT OF HIGHWAYS
FRANKFORT
COUNTY OF
FRANKLIN
CAPITAL PLAZA WEST FRANKFORT
CONNECTOR
ROAD

STATION	P. E. PROJECT NO.	
CONSTRUCTION PROJECT NO.	MAINTENANCE PROJECT NO.	DRAWING NO. 21450

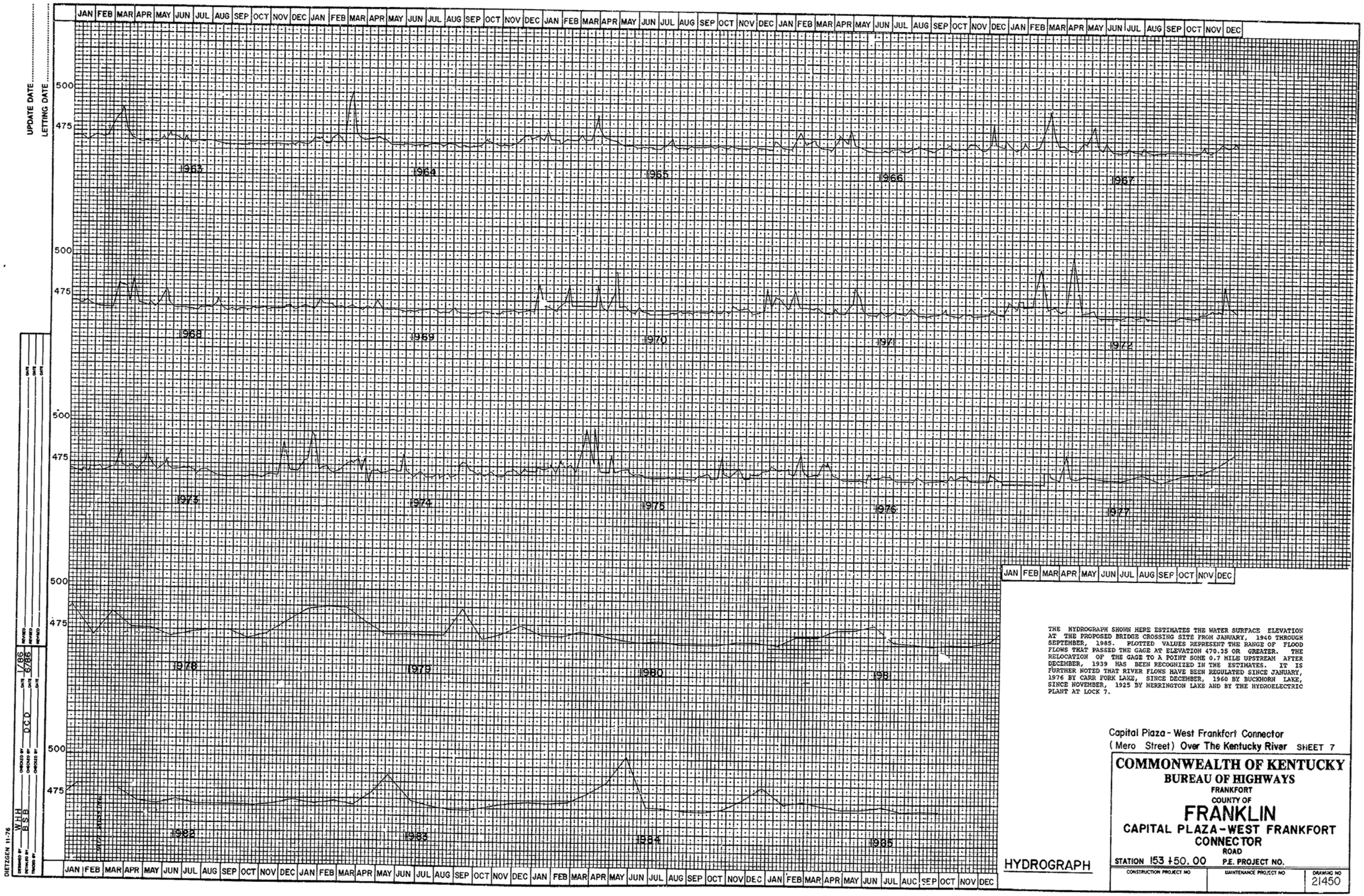

THE HYDROGRAPH SHOWN HERE ESTIMATES THE WATER SURFACE ELEVATION AT THE PROPOSED BRIDGE CROSSING SITE FROM JANUARY, 1940 THROUGH SEPTEMBER, 1985. PLOTTED VALUES REPRESENT THE RANGE OF FLOOD FLOWS THAT PASSED THE GAGE AT ELEVATION 470.35 OR GREATER. THE RELOCATION OF THE GAGE TO A POINT SOME 0.7 MILE UPSTREAM AFTER DECEMBER, 1939 HAS BEEN RECOGNIZED IN THE ESTIMATES. IT IS FURTHER NOTED THAT RIVER FLOWS HAVE BEEN REGULATED SINCE JANUARY, 1976 BY CARR FORK LAKE, SINCE DECEMBER, 1960 BY BUCKHORN LAKE, SINCE NOVEMBER, 1925 BY HERRINGTON LAKE AND BY THE HYDROELECTRIC PLANT AT LOCK 7.

Capital Plaza - West Frankfort Connector
(Mero Street) Over The Kentucky River SHEET 7

COMMONWEALTH OF KENTUCKY
BUREAU OF HIGHWAYS
FRANKFORT
COUNTY OF
FRANKLIN
CAPITAL PLAZA-WEST FRANKFORT CONNECTOR ROAD

STATION 153 +50.00 P.E. PROJECT NO.

CONSTRUCTION PROJECT NO	MAINTENANCE PROJECT NO	DRAWING NO
		21450

HYDROGRAPH

Embankment Stability Sheet

COUNTY OF	FISCAL YEAR	SHEET NO.	TOTAL SHEETS
Franklin			

F 0127 005
FSP 037 0127 006-009 020 D

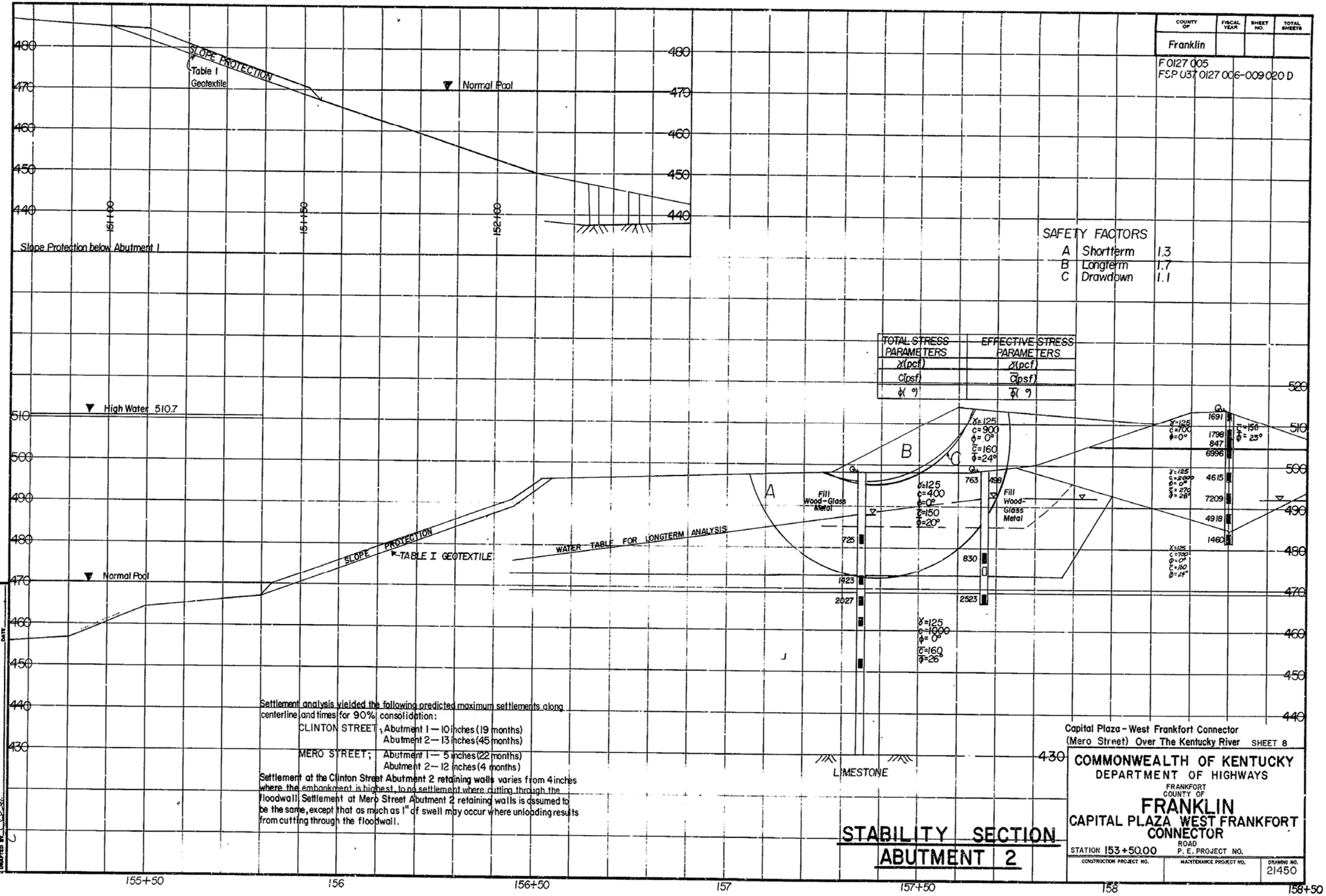

SAFETY FACTORS

A	Shortterm	1.3
B	Longterm	1.7
C	Drawdown	1.1

TOTAL STRESS PARAMETERS	EFFECTIVE STRESS PARAMETERS
γ(pcf)	γ(pcf)
c(psf)	c̄(psf)
φ(°)	φ̄(°)

Settlement analysis yielded the following predicted maximum settlements along centerline and times for 90% consolidation:

CLINTON STREET; Abutment 1 — 10 inches (19 months)
Abutment 2 — 13 inches (45 months)

MERO STREET; Abutment 1 — 5 inches (22 months)
Abutment 2 — 12 inches (4 months)

Settlement at the Clinton Street Abutment 2 retaining walls varies from 4 inches where the embankment is highest, to no settlement where cutting through the floodwall. Settlement at Mero Street Abutment 2 retaining walls is assumed to be the same, except that as much as 1" of swell may occur where unloading results from cutting through the floodwall.

STABILITY SECTION
ABUTMENT 2

Capital Plaza - West Frankfort Connector
(Mero Street) Over The Kentucky River SHEET 8

COMMONWEALTH OF KENTUCKY
DEPARTMENT OF HIGHWAYS
FRANKFORT
COUNTY OF
FRANKLIN
CAPITAL PLAZA WEST FRANKFORT CONNECTOR
ROAD
STATION 153+50.00 P. E. PROJECT NO.

CONSTRUCTION PROJECT NO.	MAINTENANCE PROJECT NO.	DRAWING NO.
		21450

SOILS AND SUBSURFACE INVESTIGATION BY: [illegible] DATE 5-30-85
DRAFTED BY: [illegible] DATE

TELEDYNE POST 11-76
FORM NO. 9

SUBSURFACE DATA

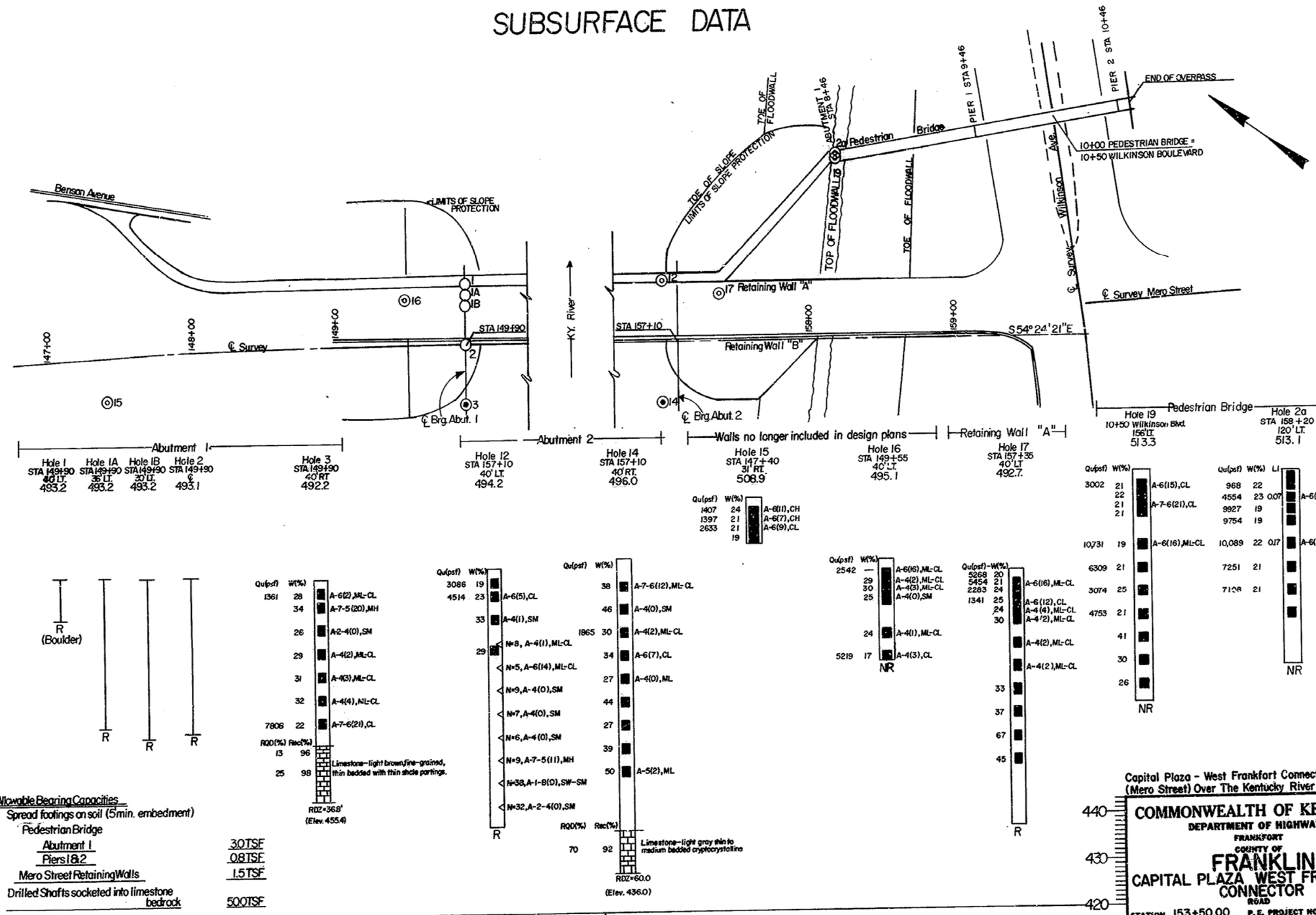

Allowable Bearing Capacities

Spread footings on soil (5 min. embedment)

Pedestrian Bridge

Abutment 1	3.0 TSF
Piers 1 & 2	0.8 TSF
Mero Street Retaining Walls	1.5 TSF
Drilled Shafts socketed into limestone bedrock	50.0 TSF

NOTE: Subsurface Data for Piers is on the following sheet

LAND BORINGS

Capital Plaza - West Frankfort Connector (Mero Street) Over The Kentucky River SHEET 9

COMMONWEALTH OF KENTUCKY
DEPARTMENT OF HIGHWAYS
FRANKFORT
COUNTY OF
FRANKLIN
CAPITAL PLAZA WEST FRANKFORT CONNECTOR
ROAD

STATION 153+50.00 P.E. PROJECT NO.

CONSTRUCTION PROJECT NO. | MAINTENANCE PROJECT NO. | DRAWING NO. 21450

UPDATE DATE
LETTING DATE

SUBSURFACE DATA

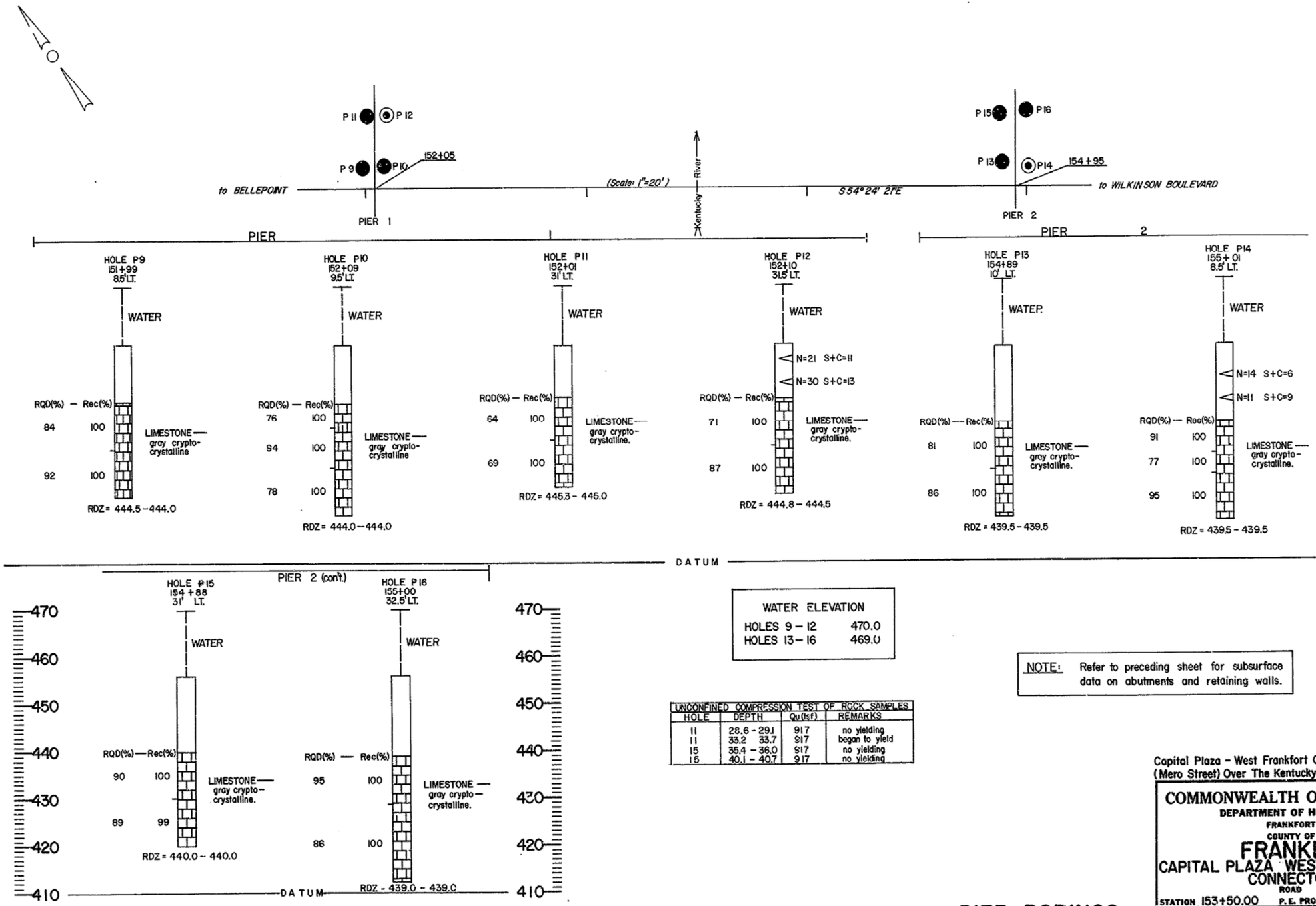

WATER ELEVATION	
HOLES 9 – 12	470.0
HOLES 13 – 16	469.0

UNCONFINED COMPRESSION TEST OF ROCK SAMPLES			
HOLE	DEPTH	Qu(tsf)	REMARKS
11	28.6 - 29.1	917	no yielding
11	33.2 33.7	917	began to yield
15	35.4 - 36.0	917	no yielding
15	40.1 - 40.7	917	no yielding

NOTE: Refer to preceding sheet for subsurface data on abutments and retaining walls.

PIER BORINGS

Capital Plaza - West Frankfort Connector
(Mero Street) Over The Kentucky River SHEET 10

COMMONWEALTH OF KENTUCKY
DEPARTMENT OF HIGHWAYS
FRANKFORT
COUNTY OF
FRANKLIN
CAPITAL PLAZA WEST FRANKFORT CONNECTOR ROAD

STATION 153+50.00 P.E. PROJECT NO.

CONSTRUCTION PROJECT NO	MAINTENANCE PROJECT NO.	DRAWING NO.
		21450

UPDATE DATE
LETTING DATE
DIVISION of MATERIALS
GEOTECHNICAL SECTION
ENGIN. GEOL. CHIEF — G. Hopkins
STRUCTURE REPORT NUMBER

UPDATE DATE .....
LETTING DATE .....

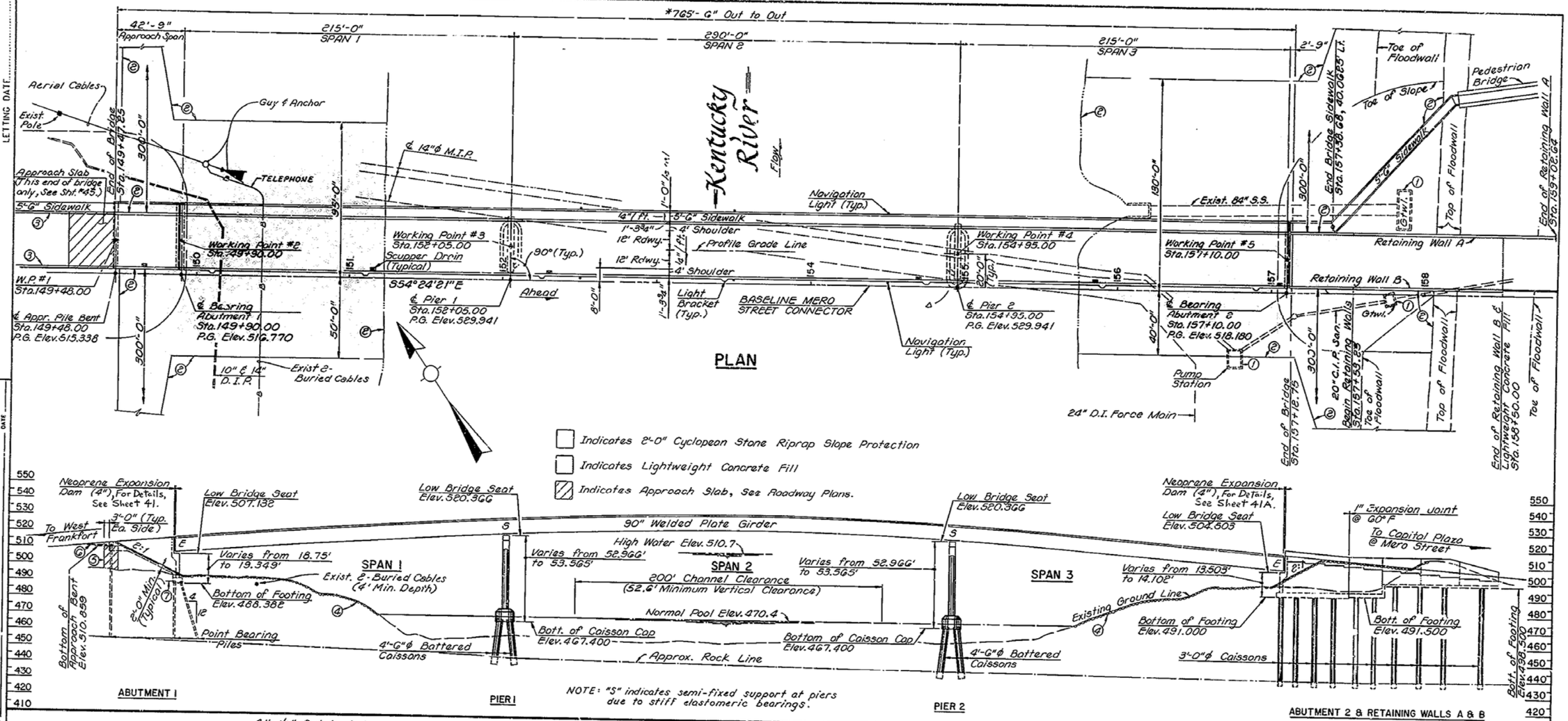

PLAN

NOTE: "S" indicates semi-fixed support at piers due to stiff elastomeric bearings.

STRUCTURE SECTION ALONG PROFILE GRADE LINE

215'-0" ~ 290'-0" ~ 215'-0"
90" Continuous - Composite Welded Steel Plate Girder
HS20-44 Loading, 24'-0" Roadway, 0° Skew
43'-6" Out to Out Shoulder at Bridge, 2:1 Slopes

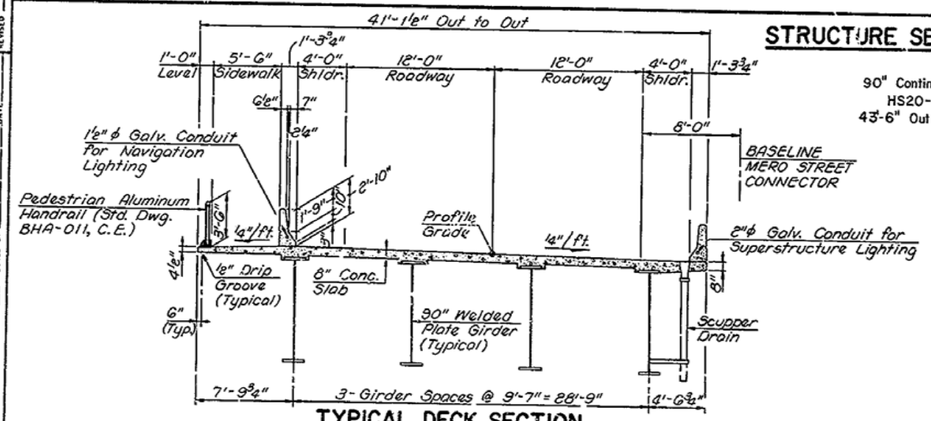

TYPICAL DECK SECTION

① Do Not Disturb
② Limit of Slope Protection
③ See Roadway Plans for Barrier Wall Details.
④ Cyclopean Stone Riprap Slope Protection
⑤ Earth Core
⑥ Pile Cut-Off Elev. 511.859
⑦ Pile Cut-Off Elev. 489.382

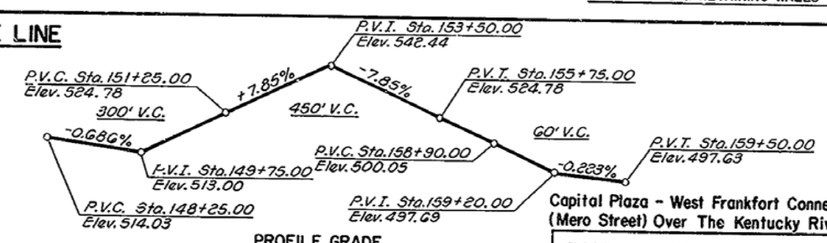

PROFILE GRADE
CAPITAL PLAZA - WEST FRANKFORT CONNECTOR
(Mero Street)

WARNING

IF THIS BRIDGE HAS THE DECK SLAB REPLACED THE END SPANS MUST BE SUPPORTED IN ACCORDANCE WITH DETAILS ON SHEETS 32A & 32B OF THE DETAIL PLANS.

LAYOUT

Capital Plaza - West Frankfort Connector (Mero Street) Over The Kentucky River SHEET 11

COMMONWEALTH OF KENTUCKY
DEPARTMENT OF HIGHWAYS
FRANKFORT
COUNTY OF FRANKLIN
CAPITAL PLAZA-WEST FRANKFORT CONNECTOR ROAD
STATION 153+50.00 P. E. PROJECT NO.

CONSTRUCTION PROJECT NO.	MAINTENANCE PROJECT NO.	DRAWING NO.
		21450

DATE 7-9-87			
DATE		DATE	
DATE		DATE	
△ Plan Pier 2 Caisson Cap	REVISED	DATE 7-86	REVISED
	REVISED	DATE 7-86	REVISED
DESIGNED BY WBC	CHECKED BY DCD		
DETAILED BY RGV	CHECKED BY DCD		
TRACED BY RRV	CHECKED BY		

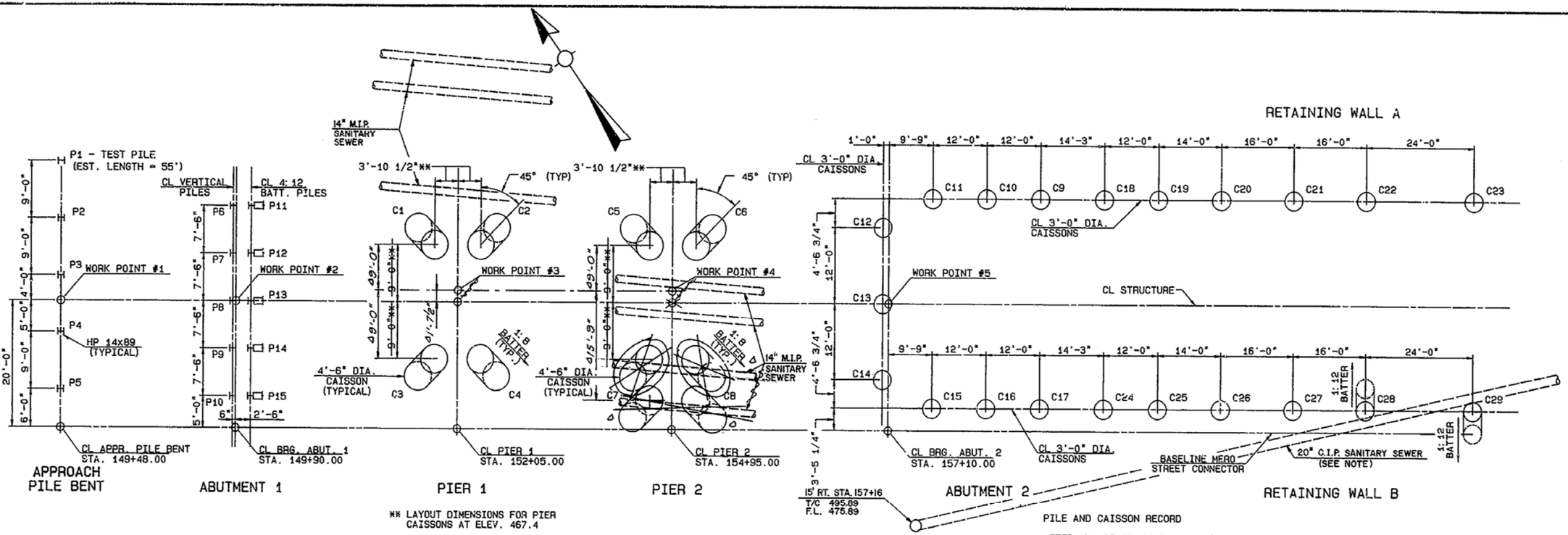

** LAYOUT DIMENSIONS FOR PIER CAISSONS AT ELEV. 467.4

PILE AND CAISSON LAYOUT

PILE AND CAISSON RECORD

AFTER ALL PILES HAVE BEEN DRIVEN, THE ENGINEER SHALL RECORD FOR EACH PILE THE TIP-OF-PILE ELEVATION AS DRIVEN, THE LENGTH OF PILE IN PLACE AND THE CALCULATED BEARING CAPACITY. LENGTHS OF PILES IN PLACE SHOWN HEREON ARE THE ACTUAL LENGTHS OF PILE IN THE FINISHED STRUCTURE BELOW CUTOFF ELEVATION. AFTER ALL CAISSONS HAVE BEEN PLACED THE ENGINEER SHALL RECORD THE ROCK ELEVATION, THE BOTTOM OF CAISSON AS DRILLED AND THE LENGTH OF CAISSON IN PLACE. ONE BLUE LINE COPY OF THIS SHEET WITH THE REQUIRED DATA SHALL BE RETURNED TO THE DIRECTOR OF THE DIVISION OF BRIDGES SO THAT THIS DATA MAY BE RECORDED ON THE ORIGINAL PLANS. THIS PILE AND CAISSON RECORD DOES NOT REPLACE OTHER RECORDS OF PILES AND CAISSONS TO BE KEPT BY THE RESIDENT ENGINEER.

PILE RECORD

APPROACH PILE BENT

PILE NUMBER	CUTOFF ELEVATION AS SHOWN	TIP-OF-PILE AS DRIVEN	LENGTH OF PILE IN PLACE (LIN. FT.)	CALCULATED BEARING CAPACITY (TONS)
P1*	511.859			
P2	511.859			
P3	511.859			
P4	511.859			
P5	511.859			

ABUTMENT 1

PILE NUMBER	CUTOFF ELEVATION AS SHOWN	TIP-OF-PILE AS DRIVEN	LENGTH OF PILE IN PLACE (LIN. FT.)	CALCULATED BEARING CAPACITY (TONS)
P6	489.382			
P7	489.382			
P8	489.382			
P9	489.382			
P10	489.382			
P11	489.382			
P12	489.382			
P13	489.382			
P14	489.302			
P15	489.382			

* INDICATES A TEST PILE

CAISSON RECORD

PIER 1

CAISSON NUMBER	TOP OF CAISSON AS SHOWN	ROCK ELEVATION	BOTTOM OF CAISSON AS DRILLED	LENGTH OF CAISSON IN PLACE
C1	467.900			
C2	467.900			
C3	467.900			
C4	467.900			

PIER 2

CAISSON NUMBER	TOP OF CAISSON AS SHOWN	ROCK ELEVATION	BOTTOM OF CAISSON AS DRILLED	LENGTH OF CAISSON IN PLACE
C5	467.900			
C6	467.900			
C7	467.900			
C8	467.900			

ABUTMENT 2

CAISSON NUMBER	TOP OF CAISSON AS SHOWN	ROCK ELEVATION	BOTTOM OF CAISSON AS DRILLED	LENGTH OF CAISSON IN PLACE
C9	491.000			
C10	491.000			
C11	491.000			
C12	491.000			
C13	491.000			
C14	491.000			
C15	491.000			
C16	491.000			
C17	491.000			

RETAINING WALL A

CAISSON NUMBER	TOP OF CAISSON AS SHOWN	ROCK ELEVATION	BOTTOM OF CAISSON AS DRILLED	LENGTH OF CAISSON IN PLACE
C18	491.500			
C19	491.500			
C20	498.500			
C21	498.500			
C22	498.500			
C23	498.500			

RETAINING WALL B

CAISSON NUMBER	TOP OF CAISSON AS SHOWN	ROCK ELEVATION	BOTTOM OF CAISSON AS DRILLED	LENGTH OF CAISSON IN PLACE
C24	491.500			
C25	491.500			
C26	498.500			
C27	498.500			
C28	498.500			
C29	498.500			

NOTE:
CAISSONS C28 & C29 SHALL BE BATTERED 1:12 IN ORDER TO CLEAR THE 20" C.I.P. SEWER. THE CONTRACTOR SHALL LOCATE THE 20" PIPE ACCURATELY AND NOTIFY THE ENGINEER OF ANY CONFLICT WITH THE 3' DIA. DRILLED CAISSONS. CONTRACTOR SHALL ALSO LOCATE 14" SEWER LINES AT THE PIERS BEFORE DRILLING PIER CAISSONS. COST OF LOCATING SEWER LINES SHALL BE INCLUDED IN THE LUMP SUM BID FOR LOCATING SEWER LINES.

PILE & CAISSON RECORDS + LAYOUT

Capital Plaza-West Frankfort Connector (Mero Street) Over The Kentucky River SHEET 12

COMMONWEALTH OF KENTUCKY
DEPARTMENT OF HIGHWAYS
FRANKFORT
COUNTY OF FRANKLIN
CAPITAL PLAZA-WEST FRANKFORT CONNECTOR ROAD
STATION 153+50.00 P. E. PROJECT NO.

CONSTRUCTION PROJECT NO.	MAINTENANCE PROJECT NO.	DRAWING NO.
		21450

UPDATE DATE
LETTING DATE

DESIGNED BY HAC CHECKED BY DATE 7/86
DETAILED BY HLF CHECKED BY DCJ DATE 7/86
TRACED BY CHECKED BY DATE
REVISED DATE
REVISED DATE
REVISED DATE

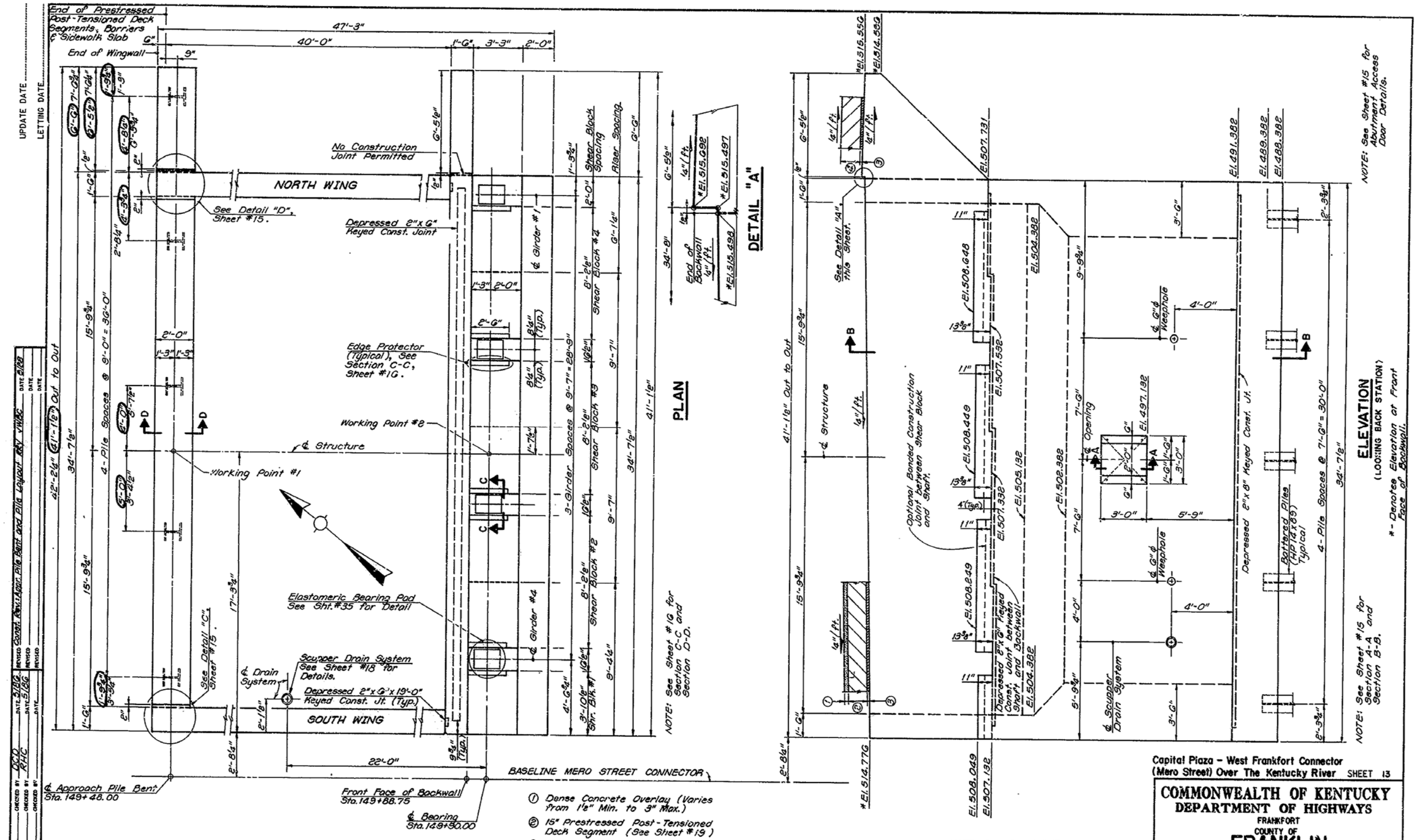
End of Prestressed Post-Tensioned Deck Segments, Barriers & Sidewalk Slab
End of Wingwall
47'-3"
40'-0"
NORTH WING
SOUTH WING
No Construction Joint Permitted
See Detail "D", Sheet #15.
Depressed 2"x 6" Keyed Const. Joint
Edge Protector (Typical), See Section C-C, Sheet #16.
Working Point #2
Working Point #1
℄ Structure
4-Pile Spaces @ 9'-0" = 36'-0"
3-Girder Spaces @ 9'-7" = 28'-9"
Elastomeric Bearing Pad See Sht. #35 for Detail
See Detail "C", Sheet #15.
Scupper Drain System See Sheet #18 for Details.
℄ Drain System
Depressed 2"x 6"x 19'-0" Keyed Const. Jt. (Typ.)
22'-0"
BASELINE MERO STREET CONNECTOR
℄ Approach Pile Bent Sta. 149+48.00
Front Face of Backwall Sta. 149+88.75
℄ Bearing Sta. 149+50.00
Shear Block Spacing
Riser Spacing
Shear Block #4
Shear Block #3
Shear Block #2
Shear Blk. #1
℄ Girder #1
℄ Girder #4
NOTE: See Sheet #16 for Section C-C and Section D-D.
PLAN
DETAIL "A"
End of Backwall
*El. 515.692
*El. 515.497
*El. 515.492
*El. 515.552
*El. 514.552
*El. 514.776
El. 507.731
El. 508.648
El. 507.532
El. 508.449
El. 507.332
El. 508.249
El. 507.132
El. 508.049
El. 505.132
El. 504.382
El. 502.382
El. 497.132
El. 491.382
El. 489.382
El. 488.382
41'-1½" Out to Out
34'-7½"
42'-2½"
15'-9¾"
17'-3¾"
See Detail "A" This Sheet.
Optional Bonded Construction Joint between Shear Block and Shaft.
Depressed 2"x 6" Keyed Const. Joint between Shaft and Backwall.
℄ Weephole
℄ Scupper Drain System
Battered Piles (HP14x89) Typical
4-Pile Spaces @ 7'-9" = 30'-0"
NOTE: See Sheet #15 for Abutment Access Door Details.
* - Denotes Face of Backwall.
NOTE: See Sheet #15 for Abutment Elevation at Front Face of Backwall.
NOTE: See Sheet #15 for Section A-A and Section B-B.
ELEVATION
(LOOKING BACK STATION)
NOTE: See Sheet #15 for Wingwall Elevation.
ABUTMENT I
① Dense Concrete Overlay (Varies from 1½" Min. to 3" Max.)
② 15" Prestressed Post-Tensioned Deck Segment (See Sheet #19)
③ 1" Non-Shimmed Elastomeric Bearing Pad (See Sheet #17 & #19)
④ 15" P.P.C. Sidewalk Segment (See Sheet #17)
UPDATE DATE
LETTING DATE
Pile Layout Rev. 1 Appr. Pile Bent and Pile Layout
Const. Rev. 1 Appr. Pile Bent and Pile Layout
DESIGNED BY DCD
DETAILED BY RHC
TRACED BY
CHECKED BY
REVISED
DATE 5/86
Capital Plaza - West Frankfort Connector
(Mero Street) Over The Kentucky River SHEET 13
COMMONWEALTH OF KENTUCKY
DEPARTMENT OF HIGHWAYS
FRANKFORT
COUNTY OF
FRANKLIN
CAPITAL PLAZA-WEST FRANKFORT CONNECTOR ROAD
STATION 153+50.00
P. E. PROJECT NO.
CONSTRUCTION PROJECT NO.
MAINTENANCE PROJECT NO.
DRAWING NO.
21450

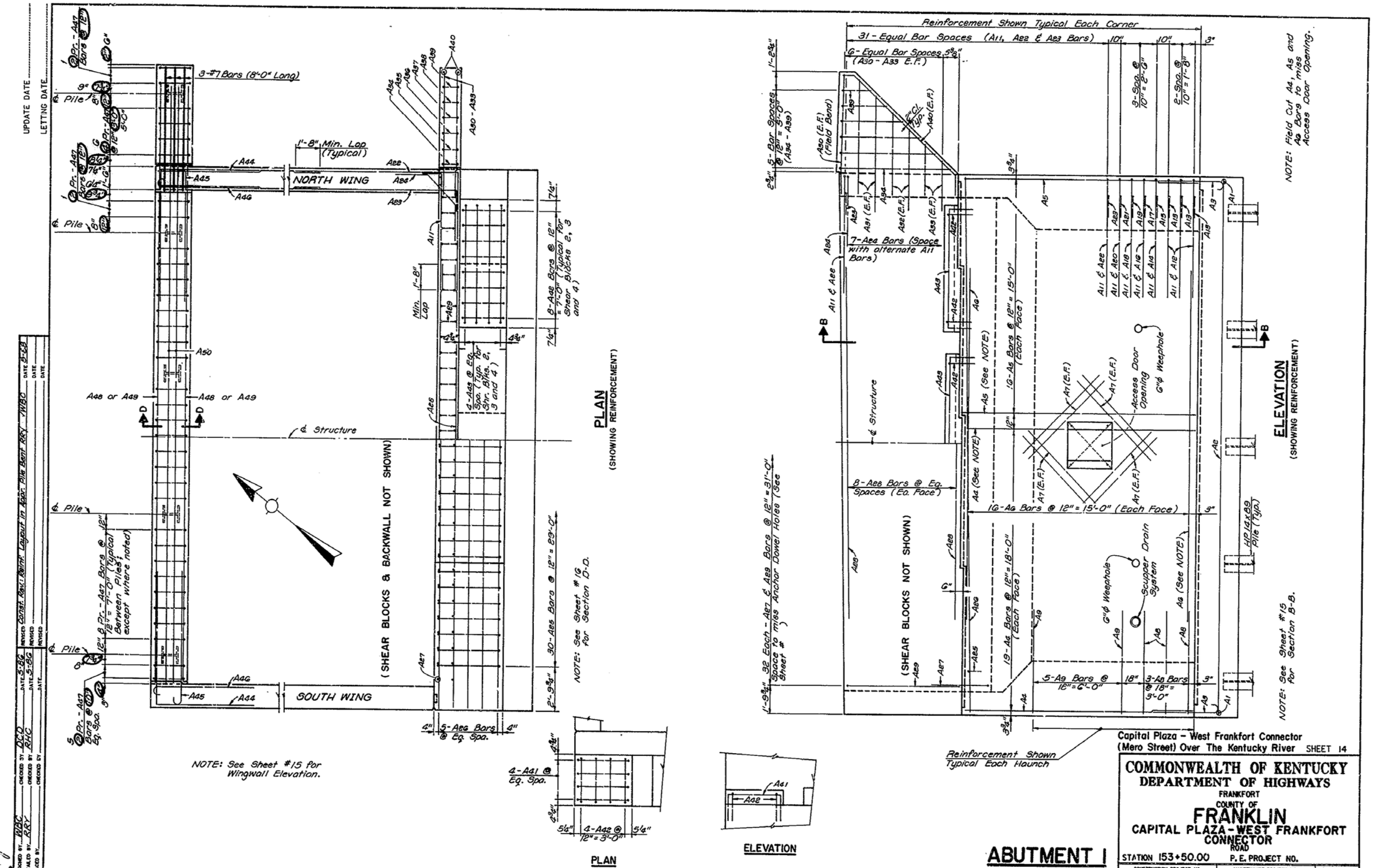
UPDATE DATE
LETTING DATE
3-#7 Bars (8'-0" Long)
℄ Pile
1'-8" Min. Lap (Typical)
NORTH WING
SOUTH WING
A44
A45
A46
A50
A48 or A49
℄ Structure
(SHEAR BLOCKS & BACKWALL NOT SHOWN)
A30 - A33
A34
A35
A36
A37
A38
A39
A40
A41
A42
A43
8-A48 Bars @ 12" = 7'-0" (Typical for Shear Blocks 2, 3 and 4)
4-A49 @ Eq. Spa. (Typ. for Shr. Blks. 2, 3 and 4)
30-A35 Bars @ 12" = 29'-0"
5-A36 Bars @ Eq. Spa.
NOTE: See Sheet #16 For Section D-D.
NOTE: See Sheet #15 For Wingwall Elevation.
PLAN
(SHOWING REINFORCEMENT)
4-A41 @ Eq. Spa.
4-A42 @ 12" = 3'-0"
PLAN
ELEVATION
SHEAR BLOCK 1 DETAILS
Reinforcement Shown Typical Each Corner
31 - Equal Bar Spaces (A11, A22 & A23 Bars)
6 - Equal Bar Spaces (A30 - A33 E.F.)
5 - Bar Spaces @ 12" = 3'-0" (A34 - A39)
7-A24 Bars (Space with alternate A11 Bars)
8-A26 Bars @ Eq. Spaces (Eq. Face)
16-A6 Bars @ 12" = 15'-0" (Each Face)
19-A8 Bars @ 12" = 18'-0" (Each Face)
16-A5 Bars @ 12" = 15'-0" (Each Face)
32 Each - A27 & A28 Bars @ 12" = 31'-0" Space to miss Anchor Dowel Holes (See Sheet #)
(SHEAR BLOCKS NOT SHOWN)
Access Door Opening
6"ϕ Weephole
Scupper Drain System
HP 14x89 Pile (Typ.)
5-A9 Bars @ 18" = 6'-0"
3-A9 Bars @ 18" = 3'-0"
Reinforcement Shown Typical Each Haunch
NOTE: Field Cut A4, A5 and A6 Bars to miss Access Door Opening.
NOTE: See Sheet #15 For Section B-B.
ELEVATION
(SHOWING REINFORCEMENT)
Const. Rest. Reinf. Layout in Appr. Pile Bent Rev. 1/1/80
REVISED
DATE 5-8-86
CHECKED BY DCD
CHECKED BY RHC
DETAILED BY RRY
TRACED BY
ABUTMENT I
Capital Plaza - West Frankfort Connector (Mero Street) Over The Kentucky River SHEET 14
COMMONWEALTH OF KENTUCKY
DEPARTMENT OF HIGHWAYS
FRANKFORT
COUNTY OF
FRANKLIN
CAPITAL PLAZA - WEST FRANKFORT CONNECTOR ROAD
STATION 153+50.00
P. E. PROJECT NO.
CONSTRUCTION PROJECT NO.
MAINTENANCE PROJECT NO.
DRAWING NO.
21450

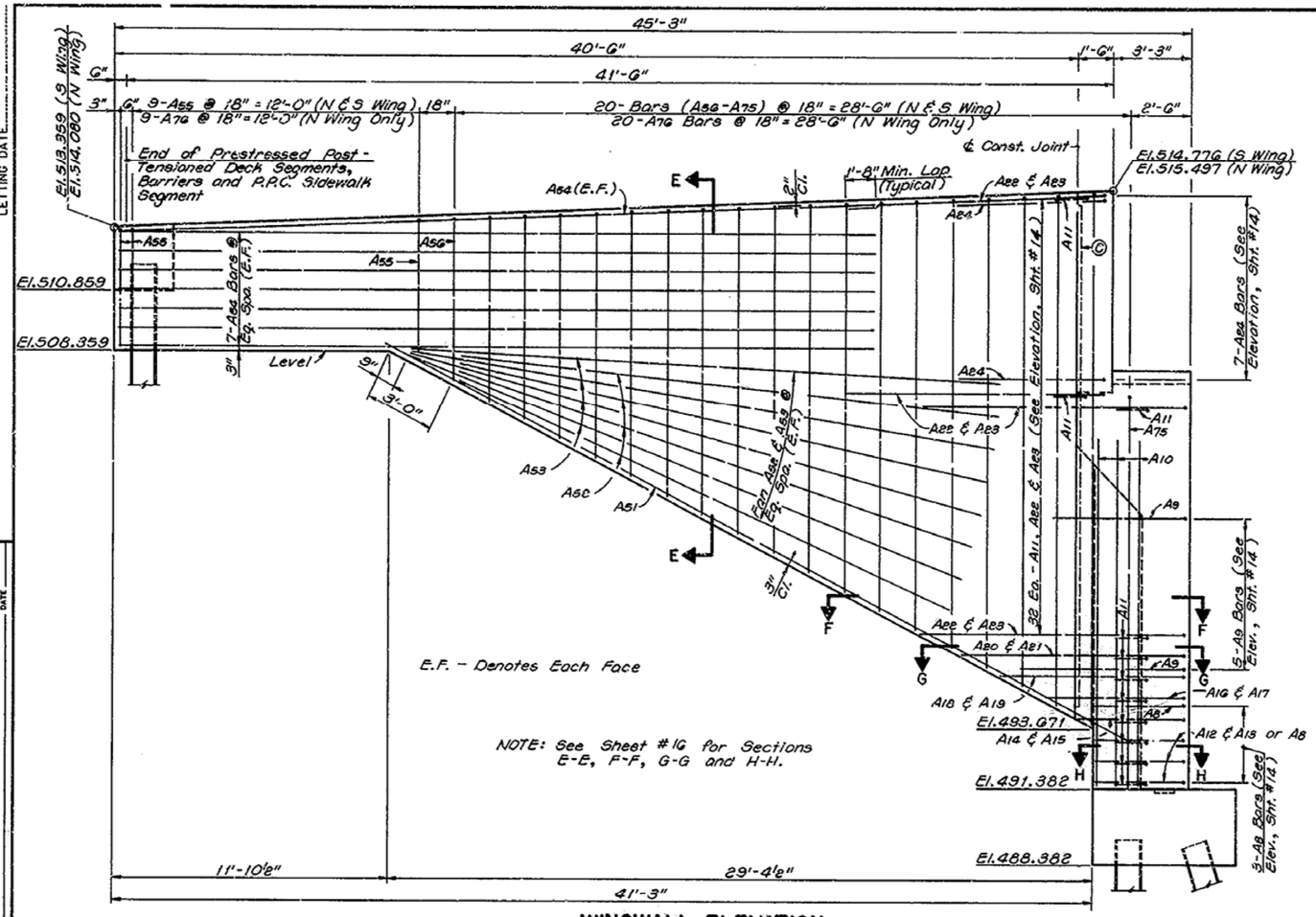

WINGWALL ELEVATION

(SOUTH WING SHOWN; NORTH WING SIMILAR, EXCEPT AS NOTED)

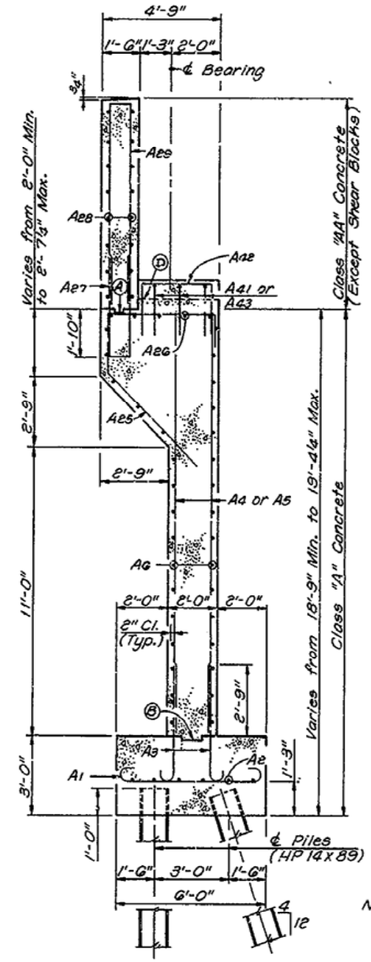

SECTION B-B

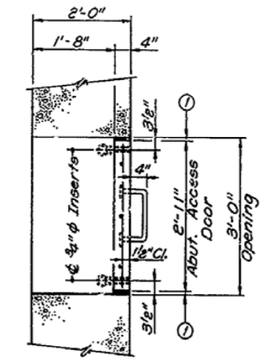

SECTION A-A

NOTE: Cost of ¾"φ Threaded Inserts shall be Incidental to Class "A" Concrete.

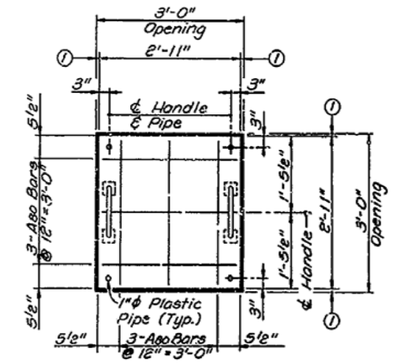

ACCESS DOOR ELEVATION

NOTE: The Contractor shall provide 1"φ Plastic Pipe, ¾"φ Galvanized Threaded Bolt with Washer, ½" Premolded Joint Material and Handle. Cost is Incidental to Class "A" Concrete.

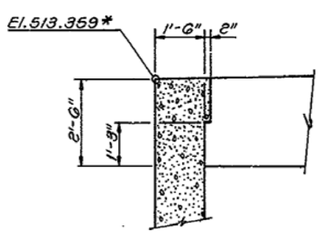

DETAIL "C"

(AT SOUTH WINGWALL)

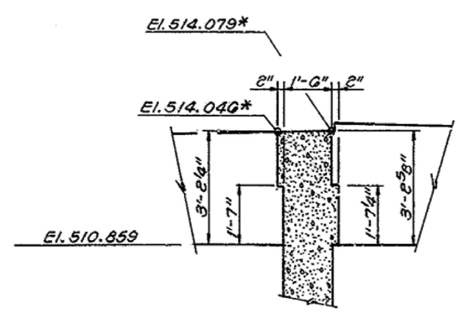

DETAIL "D"

(AT NORTH WINGWALL)

* - Indicates Elevation @ Sta.149+46.75

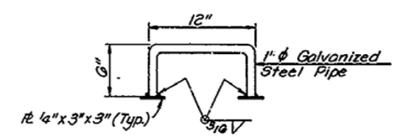

HANDLE DETAIL

(2-Required)

① ½" Premolded Joint Material
Ⓐ Depressed 2"x6" Keyed Construction Joint
Ⓑ Depressed 2"x10" Keyed Construction Joint
Ⓒ Depressed 2"x6" x 19'-0" Keyed Construction Joint
Ⓓ Optional Bonded Construction Joint Between Shear block and Shaft.

ABUTMENT 1

Capital Plaza – West Frankfort Connector
(Mero Street) Over The Kentucky River SHEET 15

COMMONWEALTH OF KENTUCKY
DEPARTMENT OF HIGHWAYS
FRANKFORT
COUNTY OF
FRANKLIN
CAPITAL PLAZA - WEST FRANKFORT CONNECTOR ROAD

STATION 153+50.00 | P. E. PROJECT NO. | CONSTRUCTION PROJECT NO. | MAINTENANCE PROJECT NO. | DRAWING NO. 21450

UPDATE DATE
LETTING DATE

DESIGNED BY WBC | CHECKED BY DCD | DATE 3-96 | REVISED
DETAILED BY RRY | CHECKED BY RHC | DATE 6-96 | REVISED
TRACED BY | CHECKED BY | DATE | REVISED

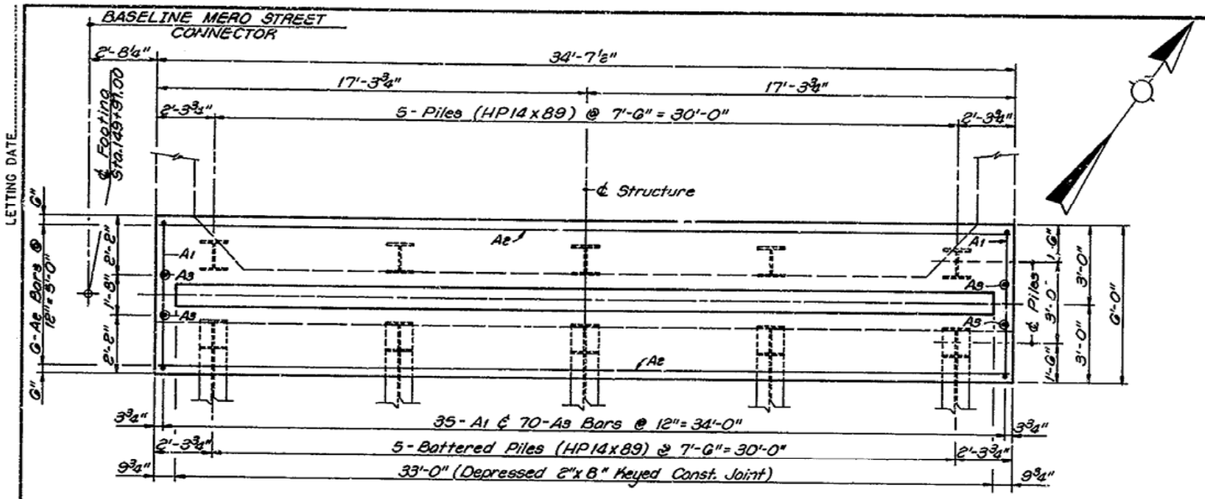

PLAN OF FOOTING

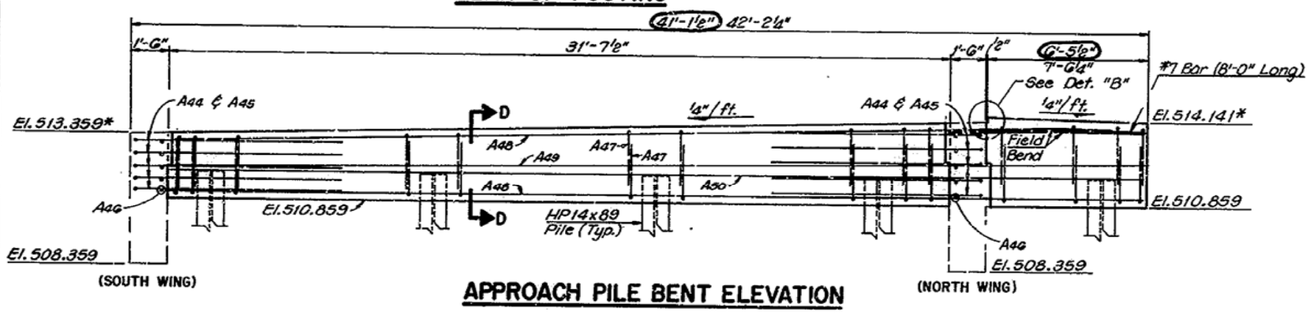

APPROACH PILE BENT ELEVATION

① Depressed 2"x 6"x 19'-0" Keyed Const. Joint

② Rustication Groove Required

*-Indicates Elevation @ Sta. 149+46.75

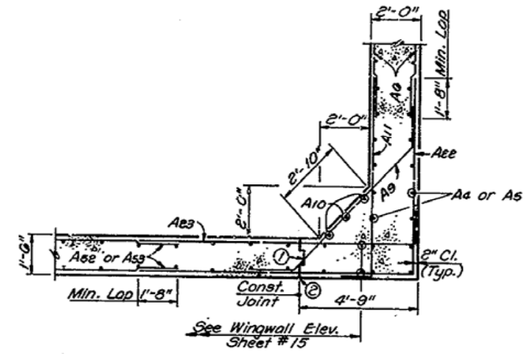

SECTION F - F

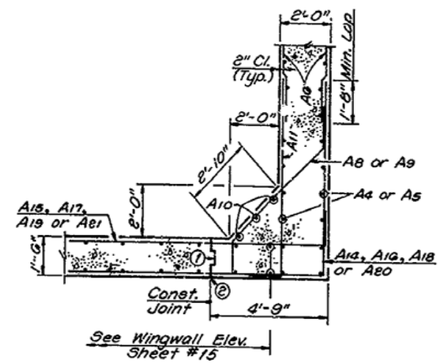

SECTION G - G

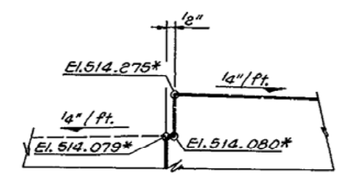

DETAIL "B"

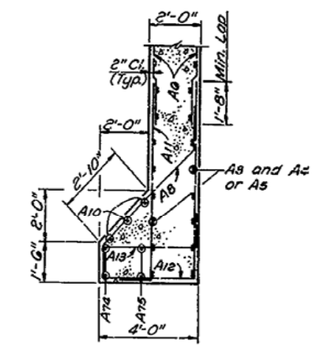

SECTION H - H

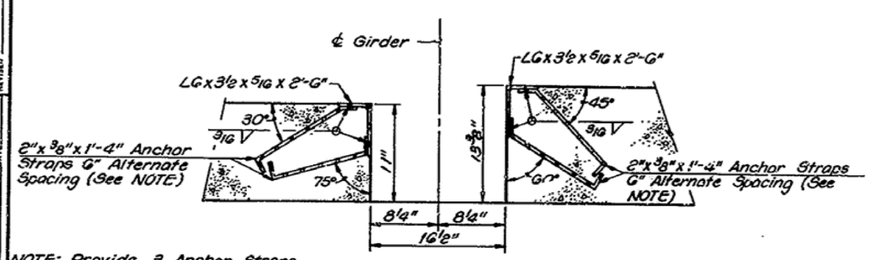

NOTE: Provide 3 Anchor Straps at Top and 2 at Bottom.

SECTION C - C

NOTE: Angles and Straps shall be galvanized. Edge Protectors are included in Lump Sum bid for STRUCTURAL STEEL.

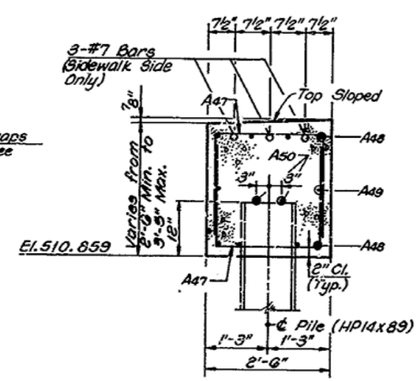

SECTION D - D

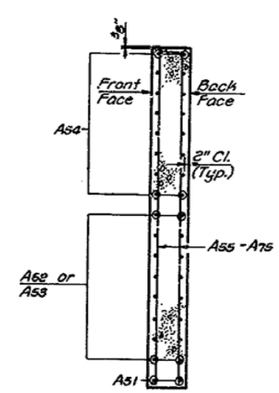

SECTION E - E
(SOUTH WING)

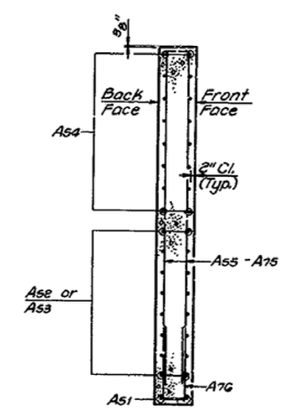

SECTION E - E
(NORTH WING)

ABUTMENT I

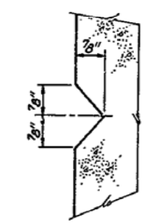

RUSTICATION GROOVE DETAIL

Capital Plaza - West Frankfort Connector
(Mero Street) Over The Kentucky River SHEET 16

COMMONWEALTH OF KENTUCKY
DEPARTMENT OF HIGHWAYS
FRANKFORT
COUNTY OF
FRANKLIN
CAPITAL PLAZA - WEST FRANKFORT CONNECTOR ROAD
STATION 153+50.00 P.E. PROJECT NO.

CONSTRUCTION PROJECT NO.	MAINTENANCE PROJECT NO.	DRAWING NO.
		21450

UPDATE DATE
LETTING DATE

DESIGNED BY HAC DETAILED BY RRV TRACED BY
CHECKED BY DLD CHECKED BY RHC CHECKED BY
REVISED DATE 5-86 REVISED DATE 6-86 REVISED DATE
Conc. Rep. Abut. Pile Bent Elev. Layout & Reinf. Sec. D. Kevin Raymond Date 3-86

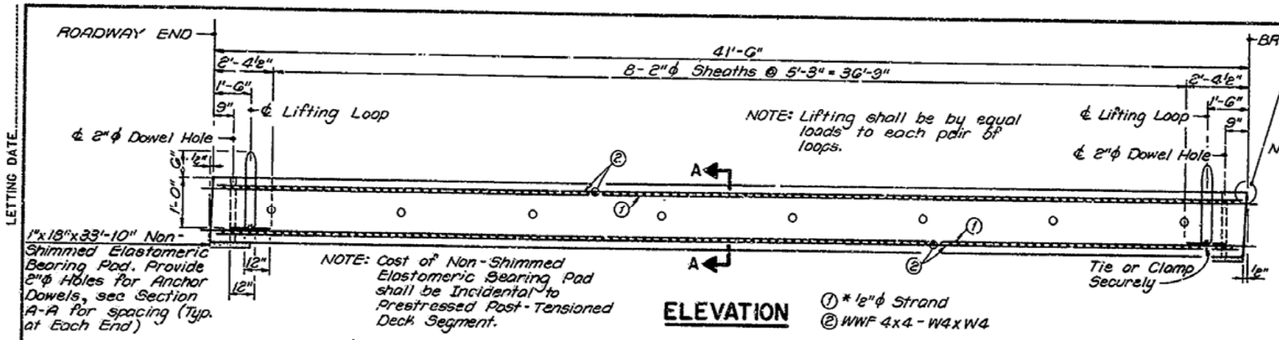

ELEVATION

Fabricator shall locate ⅝"ϕ Inserts (Epoxy Coated) to be used to secure Neoprene Expansion Dam (4") in place, see NOTE. See Sheets #18 & #41.

NOTE: Cost of ⅝"ϕ Threaded Inserts (Epoxy Coated) are Incidental to Prestressed Post-Tensioned Deck Segment.

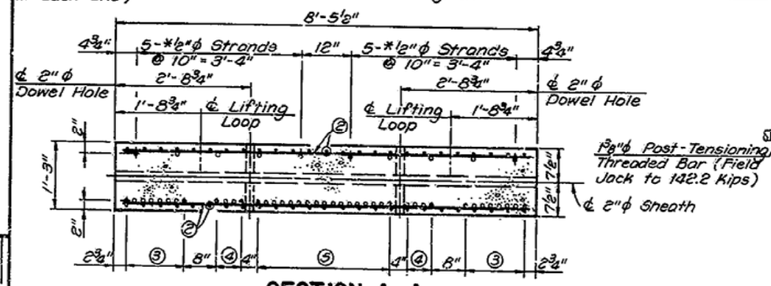

SECTION A-A

NOTE: Fabricator shall cut and bend Wire Fabric and locate ½"ϕ Strand to miss Scupper in Deck Segment A.

③ 8-*½"ϕ Strands @ 2" = 1'-2"
④ 4-*½"ϕ Strands @ 2" = 6"
⑤ 17-*½"ϕ Strands @ 8" = 2'-8"
* - Low Relax (270 ksi)

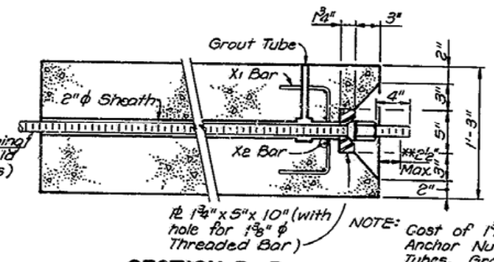

SECTION B-B

NOTE: See Detail "A" for X1 and X2 Bar Layout, this Sheet.

** Threaded bar shall be cut after post-tensioning.

NOTE: Cost of 1⅜"ϕ Threaded Post-Tensioning Bars, Anchor Nuts, Anchor Plates, Sheathing, Grout Tubes, Grout and other materials, labor and equipment for Post-Tensioning the Deck Segments is Incidental to Prestressed Post-Tensioned Deck Segment.

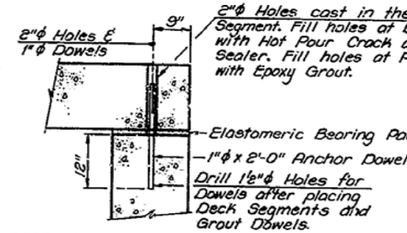

2"ϕ Holes cast in the Deck Segment. Fill holes at Backwall with Hot Pour Crack and Joint Sealer. Fill holes at Pile Bent with Epoxy Grout.

ANCHOR DOWEL DETAIL

NOTE: Cost of Anchor Dowel Installation including Anchor Dowels, Drilling, Grout and Joint Sealer shall be Incidental to Class "A" Conc.

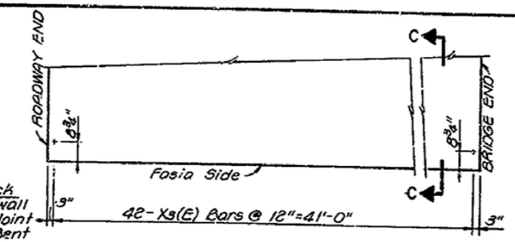

BARRIER DOWEL LAYOUT

(DECK SEGMENT A SHOWN; DECK SEGMENT D SIMILAR)

ESTIMATE OF QUANTITIES

ITEM	UNIT	QUANTITY
PRESTRESSED POST-TENSIONED DECK SEGMENT	EACH	5

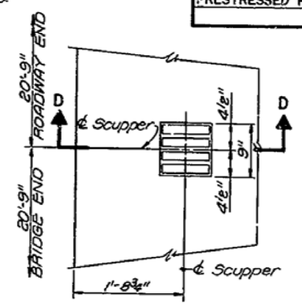

SCUPPER LAYOUT

(DECK SEGMENT A ONLY)

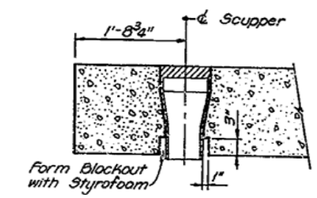

SECTION D-D

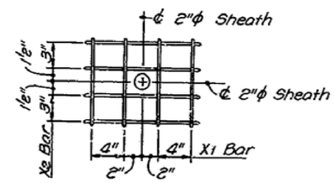

DETAIL "A"

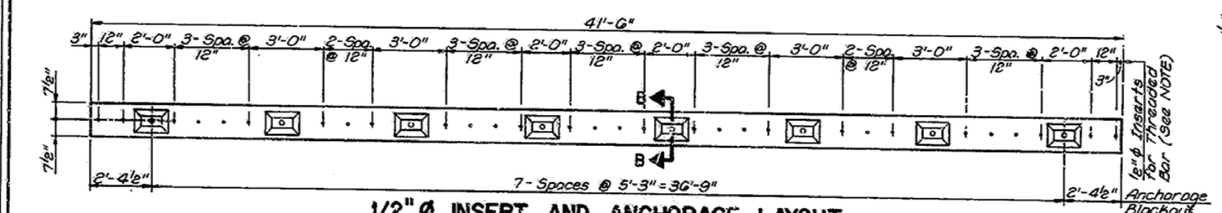

1/2"Ø INSERT AND ANCHORAGE LAYOUT

(FASCIA SIDE ONLY, DECK SEGMENTS A & D)

NOTE: ½"ϕ Inserts shall be Epoxy Coated. (60 Required)

NOTE: Cost of Polysulfide Sealer and Preformed Joint Seal shall be Incidental to Prestressed Post-Tensioned Deck Segment

NOTE: Contractor shall assemble and position ½"ϕ Threaded Bar before placing Deck Segments.

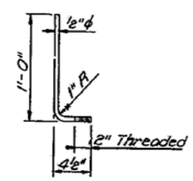

1/2"Ø THREADED BAR (EPOXY COATED) DETAIL

(60) Required

NOTE: Cost of ½"ϕ Threaded Bar and Insert shall be Incidental to Prestressed Post-Tensioned Deck Segment.

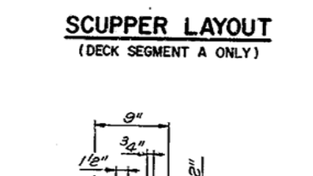

SCUPPER DETAIL

(NEENAH R-4006)

NOTE: Cost of Cast Iron Scupper shall be Incidental to STRUCTURAL STEEL.

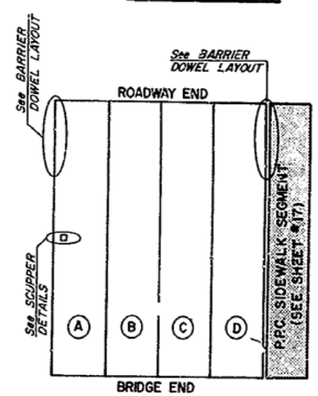

DECK SEGMENT LOCATION KEY

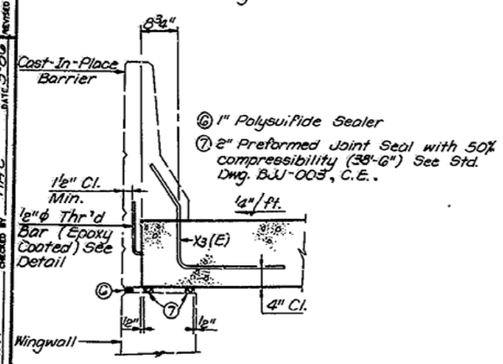

SECTION C-C

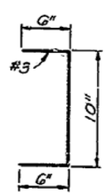

X1 BAR

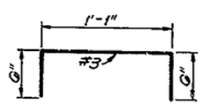

X2 BAR

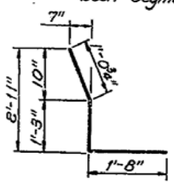

X3(E) DOWEL

PRESTRESSED POST-TENSIONED DECK SEGMENTS

Capital Plaza – West Frankfort Connector
(Maro Street) Over The Kentucky River

SHEET 19

COMMONWEALTH OF KENTUCKY
DEPARTMENT OF HIGHWAYS
FRANKFORT
COUNTY OF
FRANKLIN
CAPITAL PLAZA-WEST FRANKFORT CONNECTOR
ROAD

STATION 153+50.00 | P.E. PROJECT NO. | CONSTRUCTION PROJECT NO. | MAINTENANCE PROJECT NO. | DRAWING NO. 21450

UPDATE DATE
LETTING DATE
DATE
DATE
DATE
REVISED
REVISED
REVISED
DESIGNED BY DOD
DETAILED BY RAY
TRACED BY RAY
CHECKED BY RHC
CHECKED BY RHC
CHECKED BY RHC
DATE 3-86
DATE 3-86
DATE 3-86

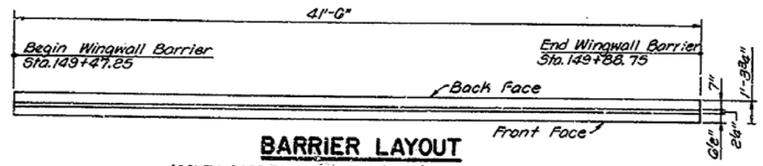

BARRIER LAYOUT

(SOUTH BARRIER SHOWN; NORTH BARRIER SIMILAR)

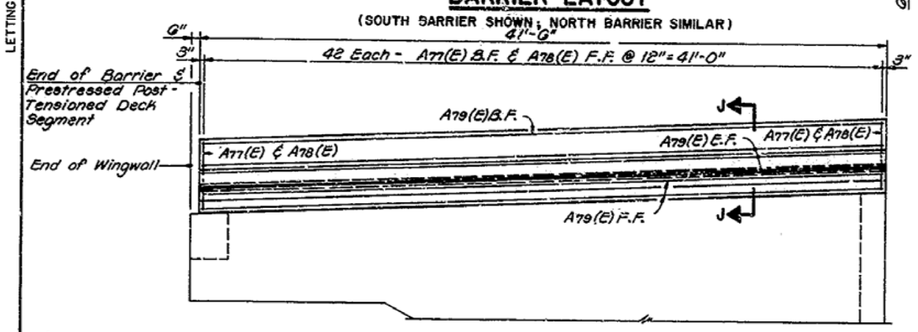

BARRIER ELEVATION

(SOUTH BARRIER SHOWN; NORTH BARRIER SIMILAR)

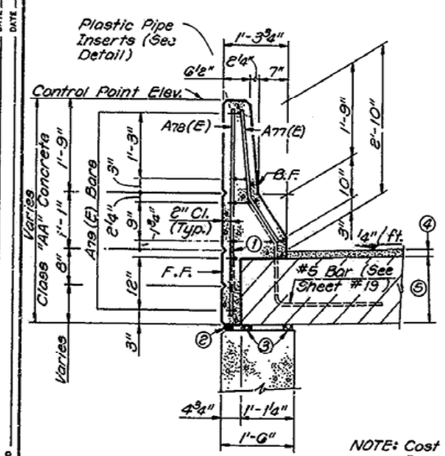

SECTION J-J

NOTE: Cost of Epoxy Coated Threaded Bar with Insert, Polysulfide Sealer and Preformed Expansion Joint Seal are Incidental to Prestressed Post-Tensioned Deck Segment. See Sheet #19.

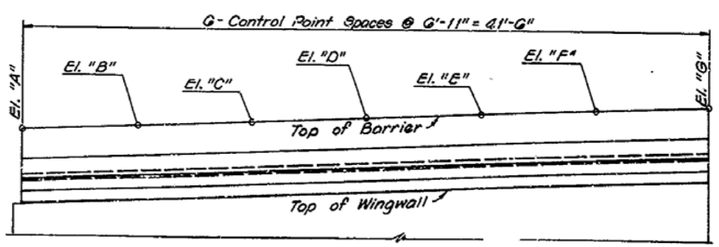

BARRIER CONTROL POINT ELEVATION LOCATION

NOTE: Contractor shall place Dense Concrete Overlay after Barriers are in place.

① ½"ϕ Threaded Bar with Insert (Epoxy Coated) See Sheet #19.
② 1" Polysulfide Sealer
③ 2" Preformed Expansion Joint Seal with 50% compressibility.
④ Dense Concrete Overlay (Varies from 1½" Min. to 3" Max.)
⑤ 15" Prestressed Post-Tensioned Deck Segment (See Sheet #19)

E.F. - Denotes Each Face
F.F. - Denotes Front Face
B.F. - Denotes Back Face

BARRIER CONTROL POINT ELEVATIONS

LOC.	SOUTH BARRIER	NORTH BARRIER
A	517.817	518.484
B	518.017	518.684
C	518.230	518.897
D	518.457	519.124
E	518.698	519.365
F	518.952	519.619
G	519.220	519.887

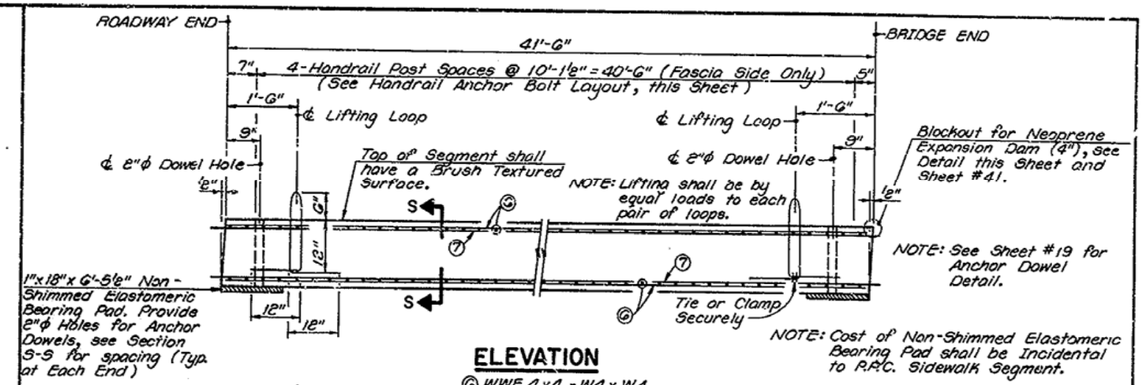

ELEVATION

⑥ WWF 4x4 - W4 x W4
⑦ *½"ϕ Strand

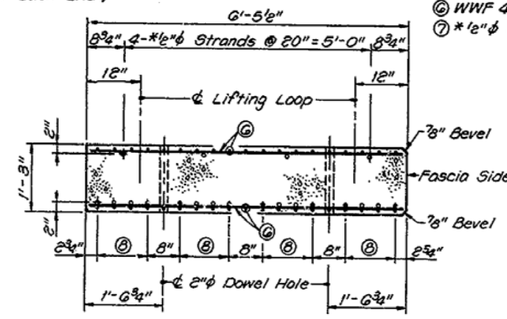

SECTION S-S

⑧ 4-*½"ϕ Strands @ 4" = 1'-0"
* - Lox Relax (270 ksi)

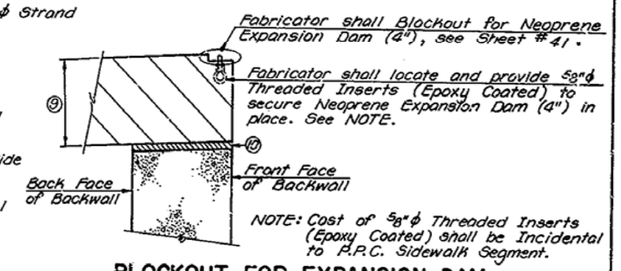

BLOCKOUT FOR EXPANSION DAM

⑨ 15" P.P.C. Sidewalk Segment
⑩ 1" Non-Shimmed Elastomeric Bearing Pad

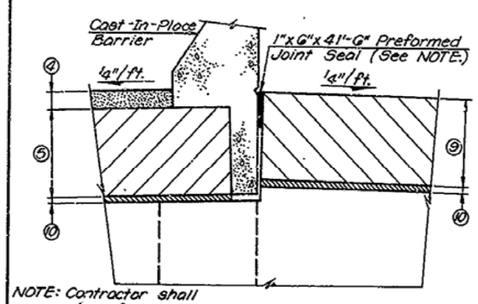

NOTE: Contractor shall place Segment after Barrier is in Place.

DETAIL "S"

NOTE: Cost of 1"x6"x41'-6" Preformed Joint Seal shall be Incidental to P.P.C. Sidewalk Segment.

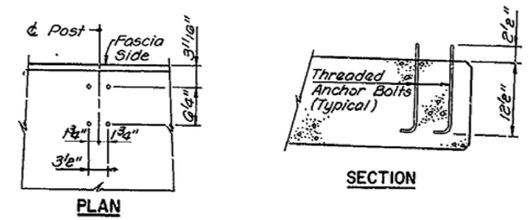

PLAN

SECTION

HANDRAIL ANCHOR BOLT LAYOUT

NOTE: Cost of ¾"ϕ Galvanized Threaded Anchor Bolt shall be Incidental to Pedestrian Aluminum Handrail.

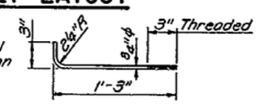

THREADED ANCHOR BOLT DETAIL
(20 Required)

P.P.C. SIDEWALK SEGMENT

NOTE: Pay Item for P.P.C. Sidewalk Segment is Prestressed Deck Segments (each).

ABUTMENT 1

Capital Plaza - West Frankfort Connector
(Mero Street) Over The Kentucky River SHEET 17

COMMONWEALTH OF KENTUCKY
DEPARTMENT OF HIGHWAYS
FRANKFORT
COUNTY OF
FRANKLIN
CAPITAL PLAZA-WEST FRANKFORT CONNECTOR ROAD
STATION 153+50.00 P.E. PROJECT NO.

CONSTRUCTION PROJECT NO.	MAINTENANCE PROJECT NO.	DRAWING NO.
		21450

UPDATE DATE
LETTING DATE

DESIGNED BY: DCD	CHECKED BY: RHC	DATE: 5-86	REVISED
DETAILED BY: RRV	CHECKED BY: RHC	DATE: 6-86	REVISED
TRACED BY:	CHECKED BY:	DATE:	REVISED

UPDATE DATE
LETTING DATE

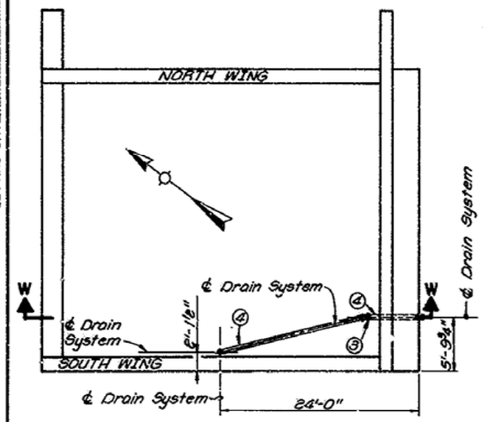

PLAN

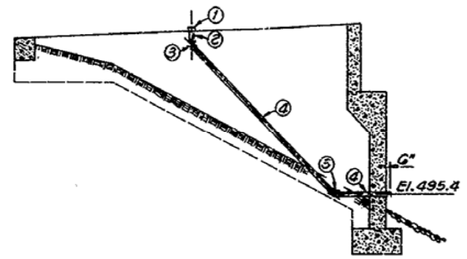

VIEW W-W

NOTE: Contractor shall provide for passage of 6"ϕ Drainage Pipe thru Abutment Shaft.

SCUPPER DRAIN SYSTEM

NOTE: Cost of installation, coupler, 45° elbows and 6"ϕ P.V.C. pipe shall be Incidental to STRUCTURAL STEEL.

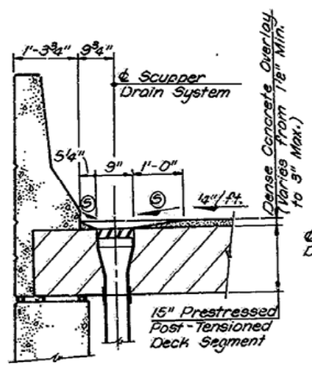

SECTION X-X

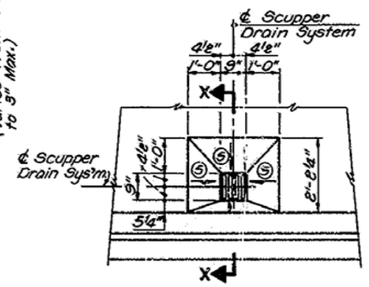

PLAN
(SHOWING OVERLAY TRANSITION TO SCUPPER)

1. Coupler
2. Spacer (6"ϕ P.V.C. Pipe)
3. 45° Elbow
4. 6"ϕ P.V.C. Pipe
5. 1½" Min. Drop

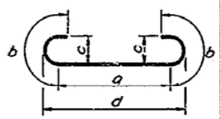

1

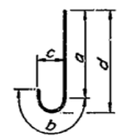

2

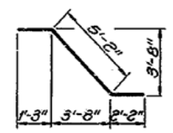

3

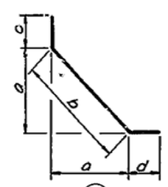

4

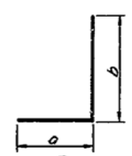

5

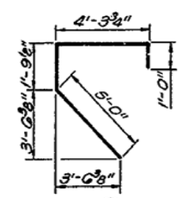

6

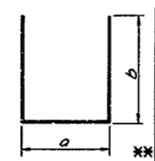

7

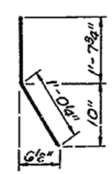

8

BILL OF REINFORCEMENT

MARK	TYPE	SIZE	NUMBER	LENGTH Ft.	LENGTH In.	LOCATION	a Ft.	a In.	b Ft.	b In.	c Ft.	c In.	d Ft.	d In.
A1	1	#6	35	7	2	Footing	5	2	1	0	0	6	5	8
A2	Str.	#4	6	34	3	Footing								
A3	2	#6	70	5	3	Ftg. & Shaft	4	3	1	0	0	6	4	6
A4	Str.	#6	38	15	6	Shaft								
A5		#6	32	15	10									
A6		#5	32	22	6									
A7	Str.		16	7	0									
A8	3		6	8	7									
A9	4		10	11	3	Shaft	4	11⅜	7	0	2	2	2	2
A10	Str.	#5	6	13	6	Haunch								
A11	5	#6	78	8	10	Shaft & Bkwl.	1	4	7	7				
A12			6	11	2	Shaft	3	8	7	7				
A13			6	4	11		3	8	1	4				
A14			2	11	11		4	5	7	7				
A15				5	8		4	5	1	4				
A16				13	8		6	2	7	7				
A17				7	5		6	2	1	4				
A18				15	4		7	10	7	7				
A19				9	1		7	10	1	4				
A20				16	11		9	5	7	7				
A21			2	10	8	Shaft	9	5	1	4				
A22			64	18	7	Shaft & Bkwl.	11	1	7	7				
A23	5	#6	64	12	4	Shaft & Bkwl.	11	1	1	4				
A24	4	#5	14	7	5	Backwall	2	3	3	2	2	2	2	2
A25	6		30	12	1	Shaft								
A26	Str.		5	34	4	Shaft								
A27	7		32	8	2	Shaft & Bkwl.	1	1	3	7				
A28	Str.		16	22	6	Backwall								
A29	7		32	15	10	Backwall	1	1	7	5				
A30	Str.		2	8	8	Bkwl. Cont'r.								
A31			4	7	4									
A32			4	5	4									
A33	Str.		4	3	4									
A34	7		1	16	0		1	1	7	6				
A35				14	0				6	6				
A36				11	6				5	3				
A37				9	0				4	0				
A38				7	0				3	0				
A39	7		1	4	8		1	1	1	10				
A40	4	#5	2	11	2	Bkwl. Cont'r.	6	5½	9	1½	0	9	1	4
A41	7	#4	4	7	5	Shear Block	3	8	1	11				
A42			28	6	8		2	11	1	11				
A43	7	#4	12	11	8	Shear Block	7	11	1	11				
A44	5	#7	10	14	9	Wings & Bent	8	6	6	4				

MARK	TYPE	SIZE	NUMBER	LENGTH Ft.	LENGTH In.	LOCATION	a Ft.	a In.	b Ft.	b In.	c Ft.	c In.	d Ft.	d In.
A45	2	#7	10	9	4	Wings & Bent	9	2½	1	2	0	7	8	6
A46	2	#7	10	7	2	Wingwalls	6	0½	1	2	0	7	6	4
A47	7	#4	68	6	5	Pile Bent	2	2	2	2				
A48	Str.	#7	8	38	4									
A49		#5	2	38	4									
A50		#6	2	38	4	Pile Bent								
A51		#6	4	34	0	Wingwalls								
A52		#5	16	22	9									
A53			16	25	0									
A54	Str.		32	30	10									
A55	7		20	10	4		1	1	4	8				
A56			2	13	8				6	4				
A57				15	4				7	2				
A58				17	0				8	0				
A59				18	6				8	9				
A60				20	2				9	7				
A61				21	10				10	5				
A62				23	4				11	2				
A63				25	0				12	0				
A64				26	8				12	10				
A65				28	4				13	8				
A66				29	10				14	5				
A67				31	6				15	3				
A68				33	2				16	1				
A69				34	8				16	10				
A70				36	4				17	8				
A71				38	0				18	6				
A72				39	8				19	4				
A73				41	2				20	1				
A74				42	10				20	11				
A75			2	32	2	Wingwalls			15	7				
A76	7		29	5	0	N Wingwall	1	1	2	0				
A77(E)	8		84	2	8	Barriers								
A78(E)	Str.		84	3	11									
A79(E)		#5	18	41	3	Barriers								
A80	Str.	#4	6	2	8	Access Door								

** PAY ITEM FOR DENSE CONCRETE OVERLAY IS CONCRETE OVERLAY (PORTLAND CEMENT).

ESTIMATE OF QUANTITIES

ITEM	UNIT	QUANTITY
CLASS "A" CONCRETE	CU YD	145.5
CLASS "AA" CONCRETE	CU YD	25.8
STEEL REINFORCEMENT	LBS	15,859
EPOXY COATED STEEL REINFORCEMENT	LBS	1,351
** CONCRETE OVERLAY (PORTLAND CEMENT)	CU YD	9.2

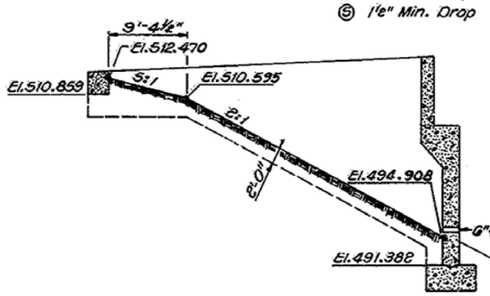

GROUND PROFILE WITHIN VAULT

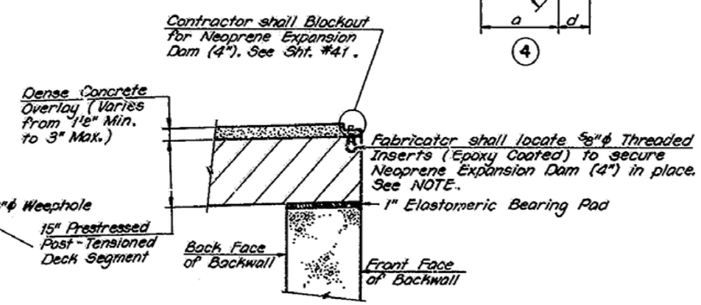

BLOCKOUT FOR EXPANSION DAM

NOTE: Cost of ⅝"ϕ Threaded Insert (Epoxy Coated) and 1" Elastomeric Bearing Pad are Incidental to Prestressed Post-Tensioned Deck Segment.

ABUTMENT 1

Capital Plaza - West Frankfort Connector
(Mero Street) Over The Kentucky River SHEET 18

COMMONWEALTH OF KENTUCKY
DEPARTMENT OF HIGHWAYS
FRANKFORT
COUNTY OF
FRANKLIN
CAPITAL PLAZA-WEST FRANKFORT CONNECTOR ROAD

STATION 153+50.00 P.E. PROJECT NO.

CONSTRUCTION PROJECT NO. | MAINTENANCE PROJECT NO. | DRAWING NO. 21450

DESIGNED BY WBC CHECKED BY DCD DATE 3-86 REVISED
DETAILED BY RRY CHECKED BY RHC DATE 6-86 REVISED
TRACED BY CHECKED BY DATE REVISED

UPDATE DATE
LETTING DATE

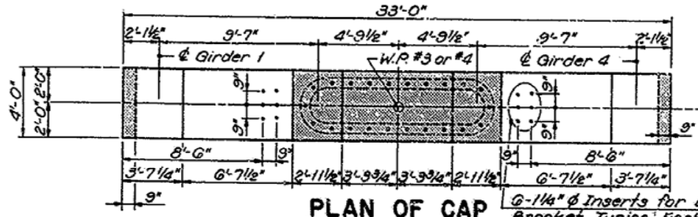

PLAN OF CAP

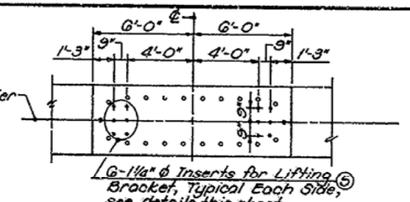

BOTTOM OF CAP

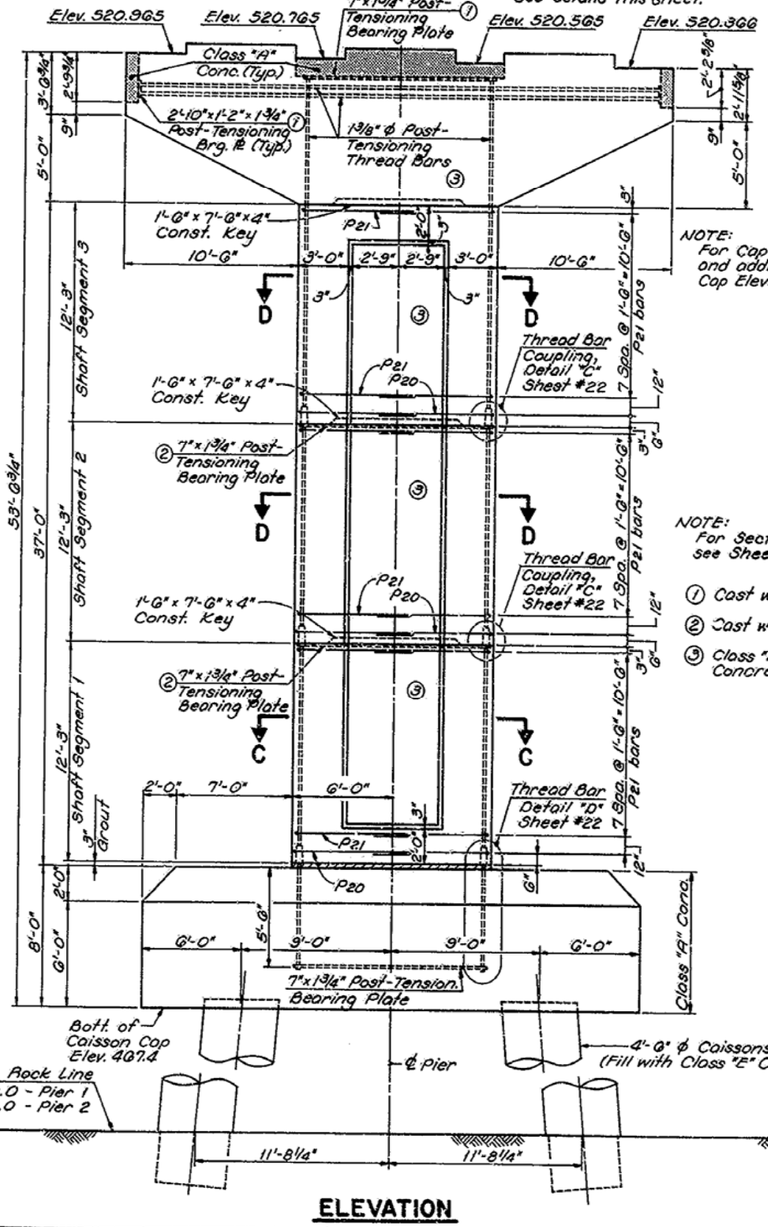

ELEVATION

NOTE:
For Cap Reinforcement and additional details, see Cap Elevation, Sht. #21.

NOTE:
For Section C-C & D-D, see Sheet #21.

① Cast with Cap
② Cast with Segment
③ Class "D" Modified Concrete.

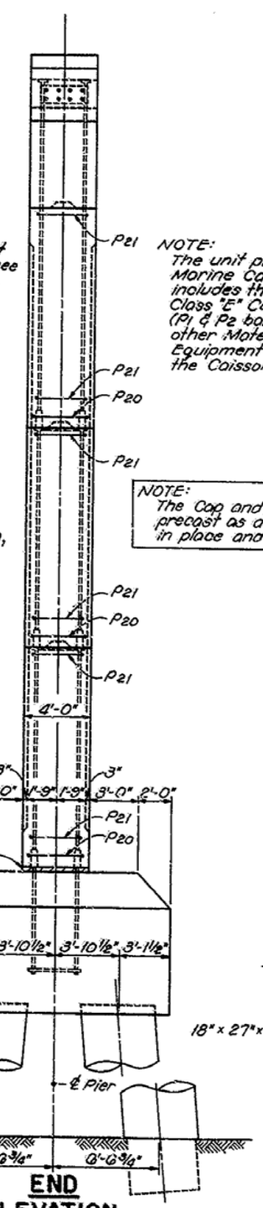

END ELEVATION

NOTE:
The unit price bid for 4'-6" ϕ Marine Caissons/Lin. Ft. includes the cost of all Drilling, Class "E" Concrete, Reinforcement (P1 & P2 bars), Steel Casing, and other Materials, Labor and Equipment necessary to const. the Caissons in place.

NOTE:
The Cap and Shaft may be precast as detailed or cast in place and post-tensioned.

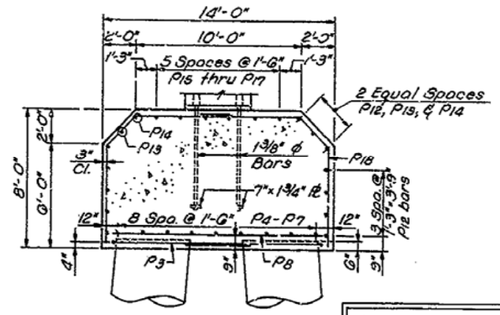

SECTION A-A

△ NOTE:
For Caisson Cap Pier 2 See Sheet #22 B.

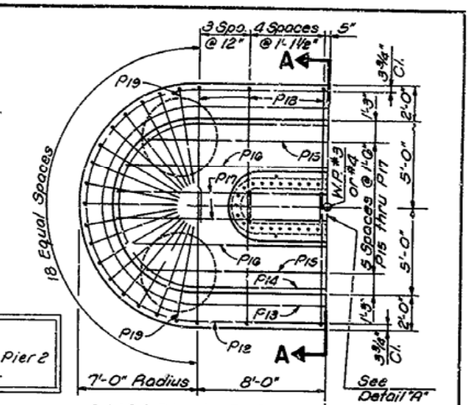

CAISSON CAP PLAN

(Top Reinforcing)

Symm. about this ℄

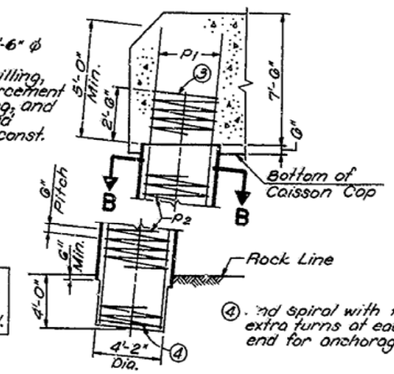

CASSION DETAIL

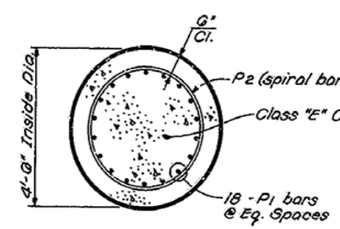

SECTION B-B

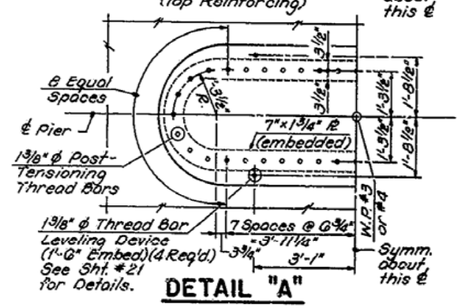

DETAIL "A"

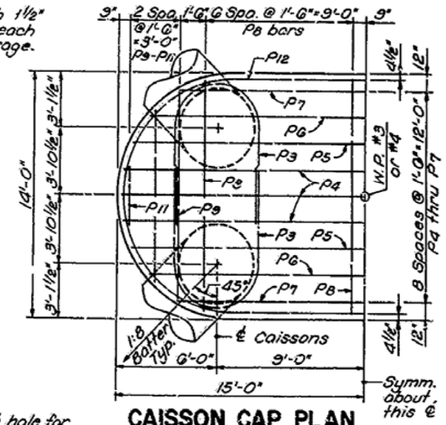

CAISSON CAP PLAN

(Bottom Reinforcing)

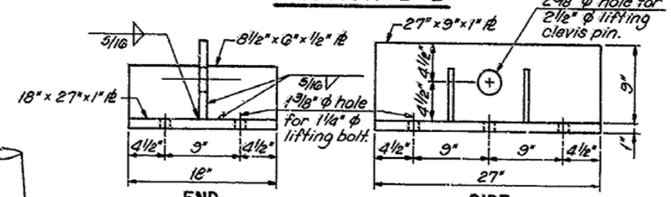

END SIDE

LIFTING BRACKET DETAILS

⑤ Inserts shall have a working load capacity of 16k min. (Each). Clevis/Pin Assembly shall have a working load capacity of 65k min.

PIERS 1 & 2

Capital Plaza - West Frankfort Connector
(Mero Street) Over The Kentucky River SHEET 20

COMMONWEALTH OF KENTUCKY
DEPARTMENT OF HIGHWAYS
FRANKFORT
COUNTY OF
FRANKLIN
CAPITAL PLAZA WEST FRANKFORT CONNECTOR
ROUTE

STATION 153+50.00 | P.E. PROJECT NO. | CONSTRUCTION PROJECT NO. | MAINTENANCE PROJECT NO. | DRAWING NO. 21450

DESIGNED BY DCD CHECKED BY R.H.C. DATE 4-86
DETAILED BY DLF CHECKED BY R.H.C. DATE 4-86
TRACED BY CHECKED BY
REVISED DATE REVISED DATE REVISED DATE

Δ Caisson Cap Pier 2

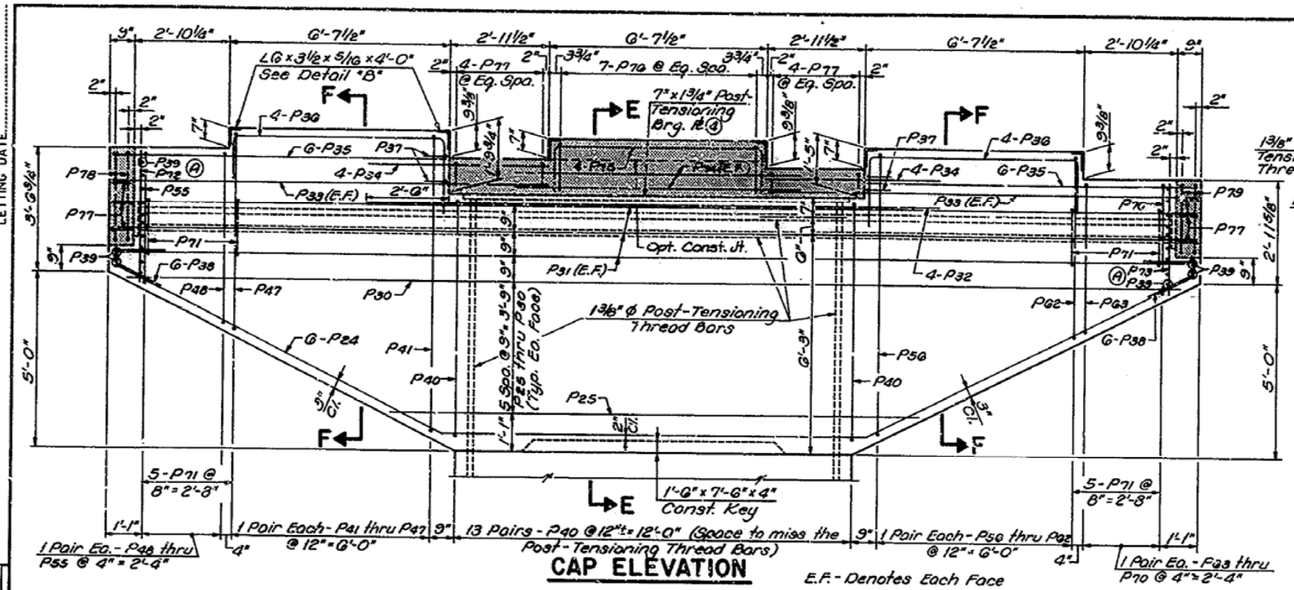

CAP ELEVATION

E.F. - Denotes Each Face

Ⓐ Bars P39, P72, & P73 See Detail "E", Sht # for reinforcing grid at Cap ends.

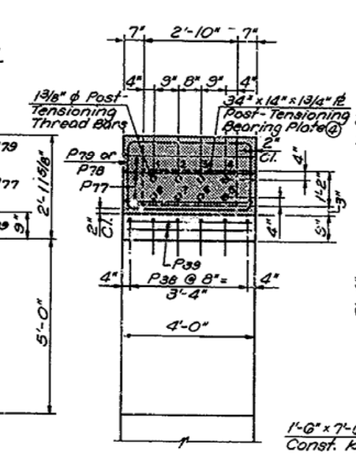

CAP END ELEVATION

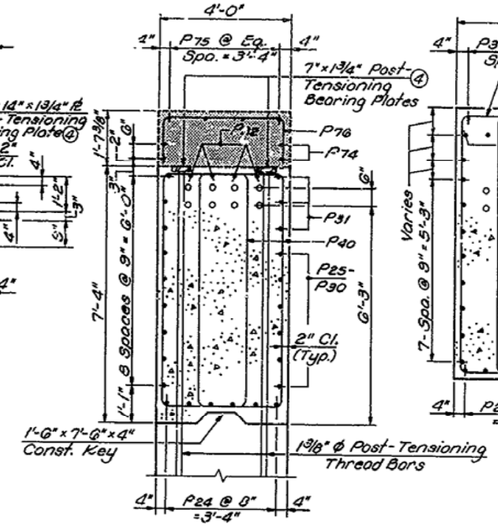

SECTION E-E

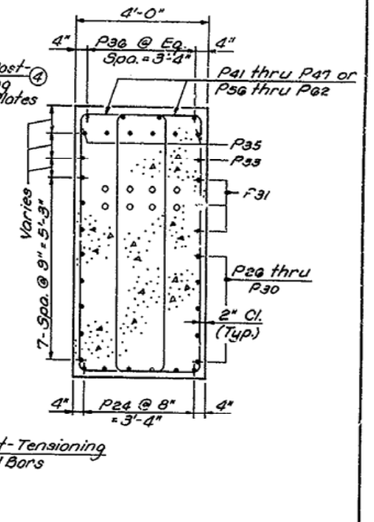

SECTION F-F

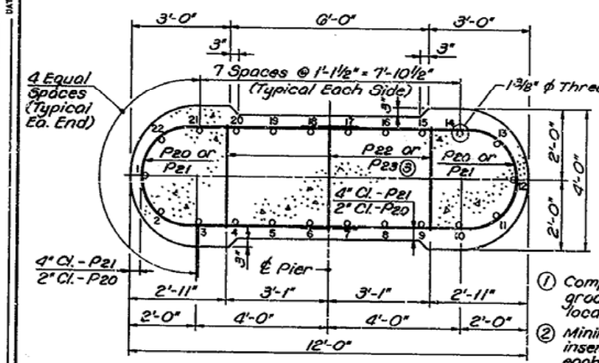

① Complete penetration groove weld (typical), location optional.

② Minimum capacity of each insert shall be 18K. Fill each insert with grout after segment is in place.

③ Match P22 with P20 Match P23 with P21

④ A36 Steel

SECTION D-D

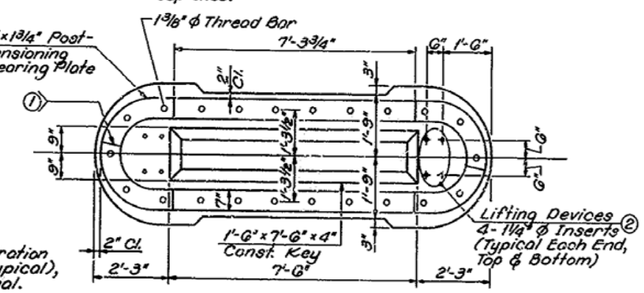

PLAN - SHAFT SEGMENT 2

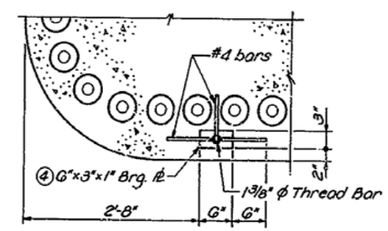

PLAN

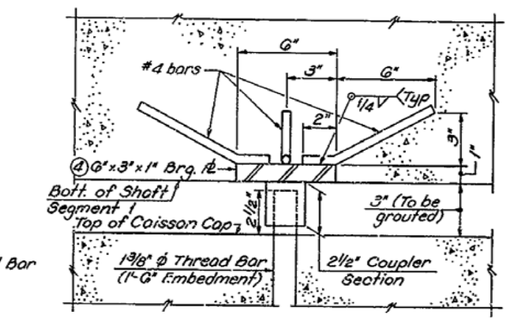

SECTION

LEVELING DEVICE DETAILS

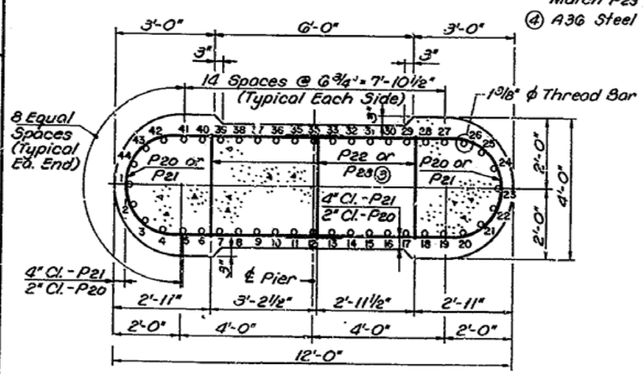

SECTION C-C

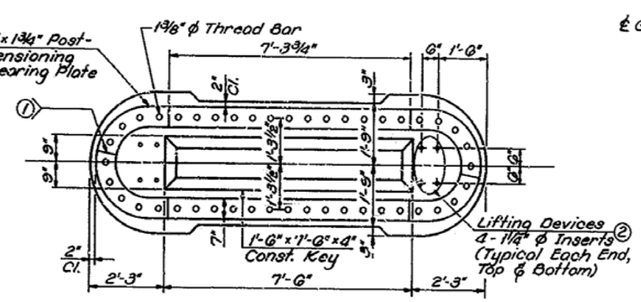

PLAN - SHAFT SEGMENT 1

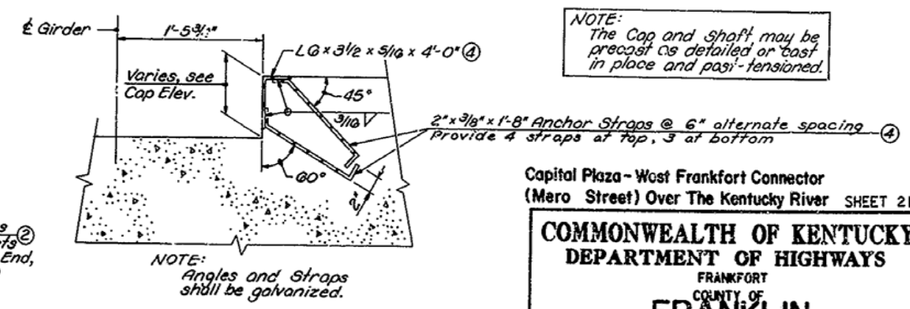

DETAIL "B"

NOTE: The Cap and Shaft may be precast as detailed or cast in place and post-tensioned.

Capital Plaza - West Frankfort Connector (Mero Street) Over The Kentucky River SHEET 21

COMMONWEALTH OF KENTUCKY
DEPARTMENT OF HIGHWAYS
FRANKFORT
COUNTY OF FRANKLIN
CAPITAL PLAZA WEST FRANKFORT CONNECTOR ROAD
STATION 153+50.00 P. E. PROJECT NO.

CONSTRUCTION PROJECT NO.	MAINTENANCE PROJECT NO.	DRAWING NO.
		21450

PIERS 1 & 2

UPDATE DATE
LETTING DATE

DESIGNED BY DCD CHECKED BY RHC DATE 4-86 REVISED
DETAILED BY ALF CHECKED BY RHC DATE 4-86 REVISED
TRACED BY CHECKED BY DATE REVISED

BILL OF REINFORCEMENT

MARK	TYPE	SIZE	NUMBER	LENGTH Ft.	LENGTH In.	LOCATION	a Ft.	a In.	b Ft.	b In.	c Ft.	c In.	d Ft.	d In.
P1	Str.	#10	72	***		Cassions								
P2	(7)	#5	4	***		Cassions								
P3	(2)	#10	4	19	10	Cass. Cap **	6	0	7	10	2	6	5	0
P4	(2)	#8	3	29	0									
P5			2	28	0									
P6			2	26	0									
P7			2	22	0									
P8			14	12	6									
P9			2	10	0									
P10			2	9	3									
P11	Str.		2	3	4									
P12	(2)		10	41	0		10	0	21	0	6	8½	13	4½
P13	(2)		2	37	11		10	0	17	10	5	8	11	4
P14	(2)		2	34	11		10	0	14	11	4	9	9	6
P15	Str.		2	22	0									
P16	Str.		2	24	6									
P17	Str.	#9	2	25	4									
P18	(3)	#6	32	14	9		6	6	8	4				
P19	(3)	#6	22	12	7	Cass. Cap **	3	10	5	8				
P20	(2)	#4	6	15	2	Shaft *	5	1	5	11¾	1	7	3	2
P21	(2)		48	14	7		5	1	4	5⅞	1	5	2	10
P22	(4)		9	4	10		3	3						
P23	(4)	#6	72	3	8	Shaft *	2	11						
P24	(5)	#6	6	34	8	Cap *								
P25	Str.		2	15	6									
P26			2	18	8									
P27			2	21	10									
P28			2	25	0									
P29			2	28	2									
P30			2	31	0									
P31			6	32	8									
P32			4	17	7									
P33			4	13	0									
P34			8	5	6									
P35	Str.	#6	12	10	0									
P36	(6)	#4	8	10	2									
P37	(7)	#4	4	5	7		0	9	3	8				
P38	(9)	#4	12	3	5									
P39	Str.	#4	23	3	8									
P40	(8)	#6	2[illegible]	19	5		6	9	2	7				
P41			2	22	10		8	5½						
P42			2	21	7		7	11¾						
P43			2	20	7		7	6						
P44			2	19	7		7	0½						
P45			2	19	0		6	6½						
P46			2	18	7		6	1						
P47			2	17	7		5	7						
P48			2	15	7		4	9¾						
P49			2	15	4		4	8¼						
P50			2	15	0		4	6½						
P51			2	14	8		4	4½						
P52			2	14	4		4	2½						
P53			2	13	7		4	0¾						
P54			2	13	3		3	10¾						
P55			2	13	5		3	9						
P56			2	13	1		8	0¾						
P57			2	2[illegible]	7		7	7						
P58			2	20	7		7	1½						
P59			2	19	2		6	7½						
P60			2	18	7		6	2						
P61			2	17	1		5	8						
P62			2	16	6		5	2½						
P63			2	14	1		4	5½						
P64			2	14	1		4	1½						
P65			2	13	3		3	11½						
P66			2	13	6		3	9½						
P67			2	13	2		3	7½						
P68			2	12	7		3	5½						
P69			2	12	1		3	3¾						
P70			2	12	1		3	1¾	2	7				
P71	(8)	#6	10	11	5		1	7	3	8				
P72	Str.	#4	10	3	6									
P73	Str.		10	3	0	Cap *								
P74	Str.		4	12	9	Cap **								
P75	(7)		4	8	10		1	4	6	3				
P76	(7)		7	6	5		1	5	3	8				
P77	(7)		14	4	9		0	7	3	8				
P78	(8)		2	12	11		3	2	3	8				
P79	(8)	#4	2	11	11	Cap **	2	7	3	8				

* Precast

** Cast in place (1)

*** Length of bars P1 & P2 determined by in place caisson length. Cost is included in unit price bid for marine caissons.

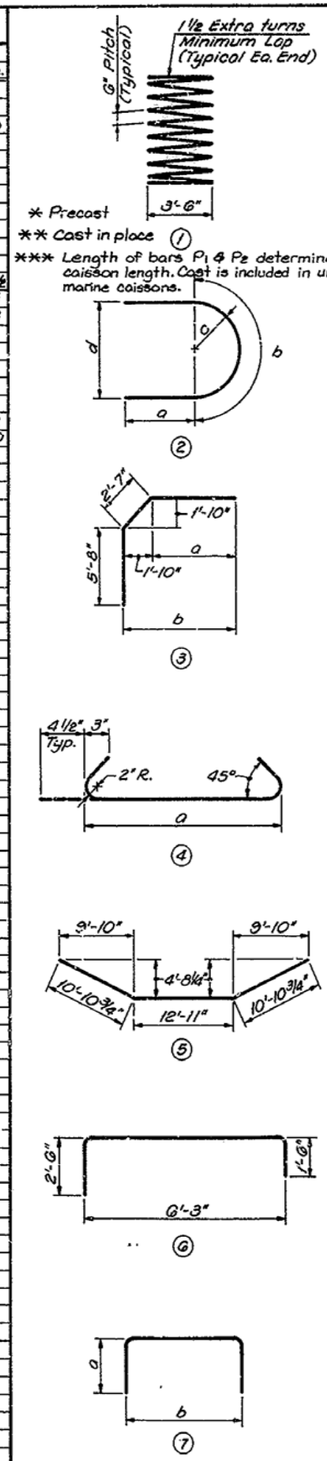

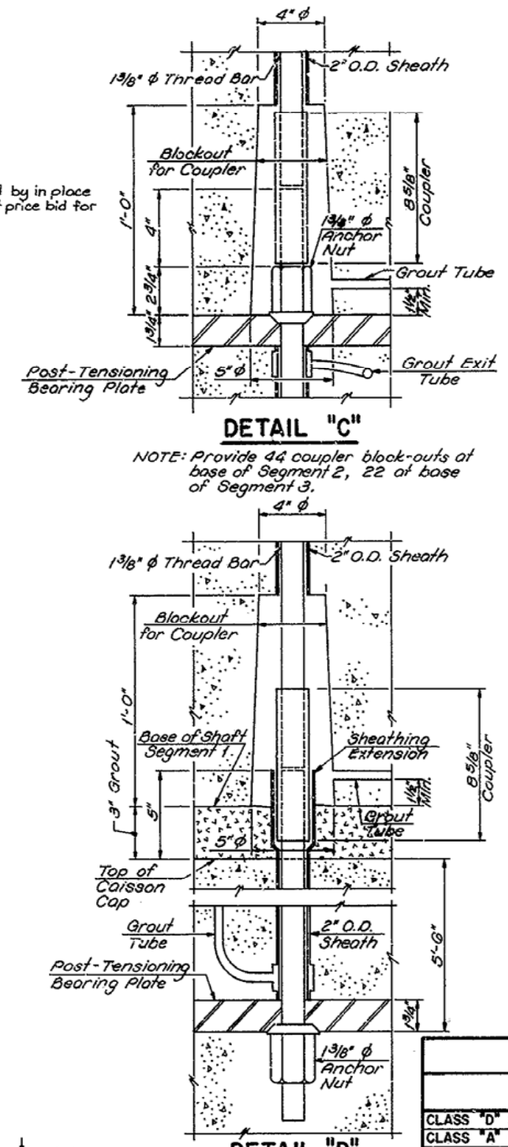

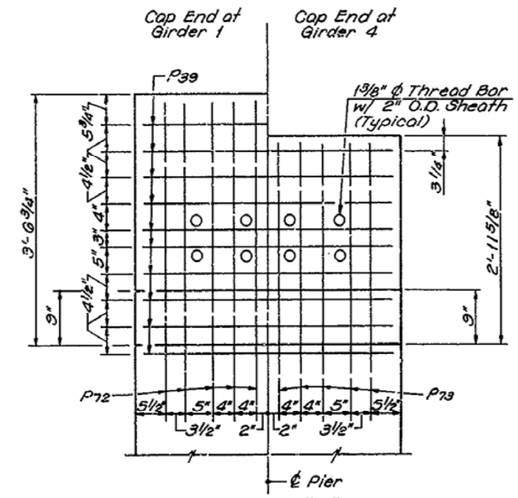

NOTES FOR POST-TENSIONED PIERS

General - The materials and construction procedures for the post- tensioned piers shall meet the requirements of the "Special Notes for Precast Post-Tensioned Piers". The special notes outlines the required construction procedure sequence.

Shaft Threadbar Tensioning Sequence

Segment 1 - Bars shall be tensioned in pairs, beginning with bars 12 and 34, then 11 and 33, then 13 and 35, continuing in this manner working from the center of the shaft outward until all 44 bars have been tensioned

Segment 2 - Bars shall be tensioned in pairs, beginning with bars 6 and 17, then 7 and 18, continuing in this alternating manner until all 22 bars have been tensioned.

Segment 3 and Cap Segment - Shaft segment 3 and the cap segment shall be stressed as a unit. The tensioning sequence shall be the same as for shaft segment 2.

Horizontal Cap Threadbar Tensioning Sequence - Bars 6 and 7 shall be tensioned and grouted just after removing the forms and before lifting the cap segment. Bar 6 shall be tensioned from one end and bar 7 from the other.

Once the shaft and cap segments are in place on the pier, all vertical threadbars have been stressed, and the central cast-in-place section of the pier cap has been placed and cured to a strength of 3000 psi, the remaining horizontal threadbars in the pier cap shall be tensioned in pairs in the order of 2 and 3, 1 and 4, and 5 and 8. For each pair, one bar shall be tensioned from one end, and the other bar from the opposite end.

Threadbar Tensioning Force - All threadbar tendons shall be stressed to an initial force of 160 kips each.

Shop Drawings - The fabricator shall submit shop drawings of the precast pier cap and shaft segments to the Engineer for approval. The drawings should include details of the post-tensioning system, sheathing, grout tubes, lifting devices, block-outs, etc.

Concrete - Concrete for the precast shaft and cap segments shall be Class D Modified in accordance with the Standard Specifications. Concrete for the cast-in-place portions of the pier cap and the caisson cap shall be Class A in accordance with the Standard Specifications. Concrete for the caissons shall be Class B in accordance with the "Special Notes for Drilled Caissons.

Handling of Precast Sections - The precast sections shall not be lifted or handled from points other than those indicated without the approval of the Engineer.

Caissons - The materials and construction procedures for the pier caissons shall meet the requirements of the "Special Notes for Drilled Caissons".

NOTE:
The Cap and Shaft may be precast as detailed or cast in place and post-tensioned.

ESTIMATE OF QUANTITIES

ITEM		UNIT	QUANTITY PIER 1	QUANTITY PIER 2
CLASS "D" MODIFIED CONCRETE	(A)	CU. YD.	88.9	88.9
CLASS "A" CONCRETE	(B)	CU. YD.	109.6	109.6
STEEL REINFORCEMENT	(C)	LBS.	5,552	5,552

(A) Unit price bid for Class "D" modified concrete includes all 1 3/8" dia. Post-Tensioning Threadbars, Anchor Nuts, Couplers, Post-Tensioning Bearing Plates, Sheathing, Grout tubes, grout for post-tensioning bars, grout for pier shaft base, reinforcing and other materials, labor, and equipment necessary to construct the pier shaft and cap segments in place. Class "A" concrete and reinforcing in cast-in-place section of the pier cap are not included.

(B) Includes concrete in cast-in-place sections of the pier cap and caisson cap only.

(C) Includes reinforcing in cast-in-place sections of the pier cap and caisson cap only (bars P3-P19 and P74-P79).

PIERS 1 & 2

Capital Plaza - West Frankfort Connector (Mero Street) Over The Kentucky River SHEET 22

COMMONWEALTH OF KENTUCKY
DEPARTMENT OF HIGHWAYS
FRANKFORT
COUNTY OF FRANKLIN
CAPITAL PLAZA WEST FRANKFORT CONNECTOR ROAD

STATION 153+50.00 P. E. PROJECT NO.

CONSTRUCTION PROJECT NO.	MAINTENANCE PROJECT NO.	DRAWING NO.
		21450

UPDATE DATE
LETTING DATE

DESIGNED BY DCO CHECKED BY RHC DATE 4-86 REVISED
DETAILED BY ALF CHECKED BY RHC DATE 4-86 REVISED
TRACED BY DATE REVISED

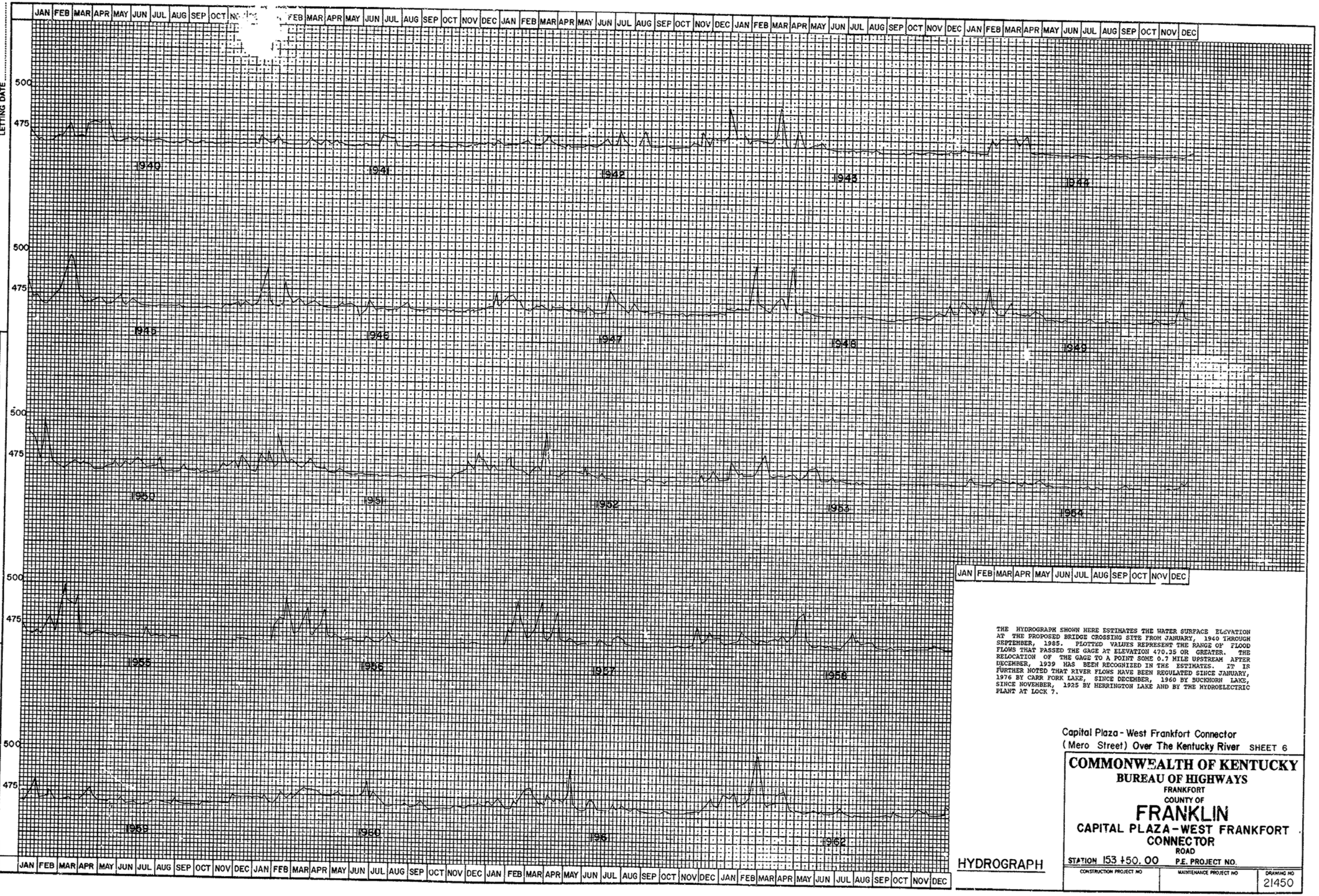

THE HYDROGRAPH SHOWN HERE ESTIMATES THE WATER SURFACE ELEVATION AT THE PROPOSED BRIDGE CROSSING SITE FROM JANUARY, 1940 THROUGH SEPTEMBER, 1985. PLOTTED VALUES REPRESENT THE RANGE OF FLOOD FLOWS THAT PASSED THE GAGE AT ELEVATION 470.35 OR GREATER. THE RELOCATION OF THE GAGE TO A POINT SOME 0.7 MILE UPSTREAM AFTER DECEMBER, 1939 HAS BEEN RECOGNIZED IN THE ESTIMATES. IT IS FURTHER NOTED THAT RIVER FLOWS HAVE BEEN REGULATED SINCE JANUARY, 1976 BY CARR FORK LAKE, SINCE DECEMBER, 1960 BY BUCKHORN LAKE, SINCE NOVEMBER, 1925 BY HERRINGTON LAKE AND BY THE HYDROELECTRIC PLANT AT LOCK 7.

Capital Plaza - West Frankfort Connector
(Mero Street) Over The Kentucky River SHEET 6

COMMONWEALTH OF KENTUCKY
BUREAU OF HIGHWAYS
FRANKFORT
COUNTY OF
FRANKLIN
CAPITAL PLAZA-WEST FRANKFORT CONNECTOR ROAD

STATION 153 +50.00 P.E. PROJECT NO.

CONSTRUCTION PROJECT NO	MAINTENANCE PROJECT NO	DRAWING NO
		21450

HYDROGRAPH

UPDATE DATE
LETTING DATE

DRAWN BY WHH DATE 1/86
DETAILED BY BSB DATE 6/86
TRACED BY DATE
CHECKED BY DCD
REVISED
DIETZGEN 11-76

UPDATE DATE

LETTING DATE

BRIDGE CLEARANCE GAUGES

1. Clearance gauges installed on bridges across navigable waters shall be so constructed and placed as to indicate the vertical distance between "low steel" of the bridge channel span and the level of the water. The gauge shall read from top to bottom, measured from low steel to the bottom of the foot marks. The gauge shall be installed so as to face approaching traffic and shall extend to a reasonable height above high water so as to be meaningful to the viewer.

a. When a clearance gauge is required, such gauge shall be installed on end of right channel pier or pier protection structure facing approaching traffic. The District Commander may specify other or additional locations for clearance gauge installations, as particular conditions or circumstances may warrant.

b. The cost of installation and maintenance of clearance gauge installations shall be borne by the bridge owner or operator.

2. Clearance gauges shall be of durable material permanently fixed to the bridge pier, or pier protection structure, and of such strength as to provide a structure resistant to weather, tide, and current. However, clearance gauges may be painted directly on the bridge channel pier if the face of the pier is flat and has sufficient width to accommodate the foot marks (graduations) and numerals.

3. The gauge shall be marked by black numerals and foot marks on a white background. Paint, if used, should be of good exterior quality, resistant to chalking or bleeding. Manufactured numerals and background material may be used. The size, type and spacing of numerals conforming with those in "Standard Alphabets for Highway Signs", Department of Transportation, Federal Highway Administration, 1966, reprinted 1972, shall be used as follows:

Nominal day visibility distance (feet)	Height of numeral (inches)	Type standard alphabet	Vertical spacing of numerals (feet)
Less than 500	12	Series C	2
500 to 700	18	Series C	2
750 to 1000	24	Series D	5
1000 to 2000	30	Series E	5
More than 2000	36	Series E	10

ENCLOSURE(7

a. The nominal day visibility distance, the distance at which the available clearance needs to be seen, shall be established by the District Commander after determining the requirements of navigation for such information.

b. The length of the foot marks shall be no less than the width of a single numeral used (except numerals 1 and 4), the same thickness as the width of stroke of the numeral, and should extend to the nearest margin of the white background. "Foot marks" shall be spaced every foot for nominal day visibility of less than 500 feet, every 2 feet for a nominal day visibility of more than 500 feet but less than 1,000 feet, and every 5 feet for nominal day visibility of more than 1,000 feet.

c. Intermediate foot marks may be used when more precise determination of actual clearance is necessary. Such intermediate foot marks shall have a width of stroke one-half the width of the stroke required for the numeral and shall be three-quarters as long as the primary foot marks.

d. The horizontal distance between the numeral and nearest edge of the white background shall be no less than one-half the width of a single numeral (excepting numerals 1 and 4).

e. The minimum width of the white background shall be no less than three times the width of a single numeral (excepting numerals 1 and 4) plus the width of each additional numeral (when multiple numerals are used) plus numeral spacing.

f. The vertical distance between the top and bottom ends of the clearance gauge and "low steel" shall be as established by the District Commander after determining the requirements of navigation for such information.

4. Clearance gauges shall be maintained in good repair and kept in good legible condition by and at the expense of the owner or operator of the bridge. The bridge owner or operator shall be responsible for the accuracy of the gauge. The vertical distance of the numerals and foot marks below "low steel" of the bridge should be re-measured whenever the gauge is repainted or the structure is repaired.

5. When special or peculiar circumstances or conditions exist which make compliance with these standards impractical, the bridge owner or operator may apply in writing to the Commandant via the District Commander for permission to deviate from these standards or obtain a waiver of the requirement for clearance gauges.

6. Existing clearance gauges may be continued in use as long as they are maintained in satisfactory condition. However, whenever such clearance gauges are repaired or repainted these requirements shall be met as deemed necessary by the District Commander.

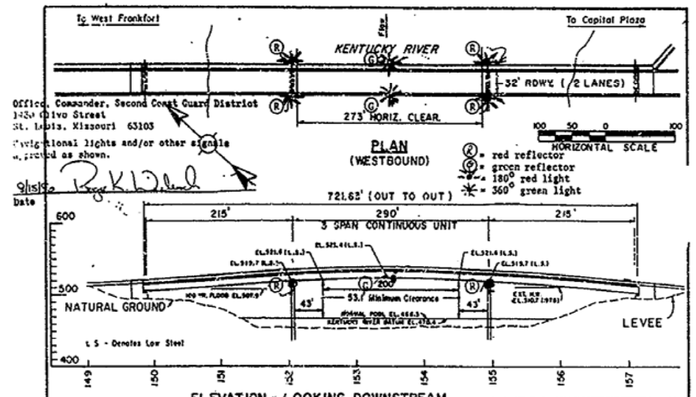

ENCLOSURE(5)

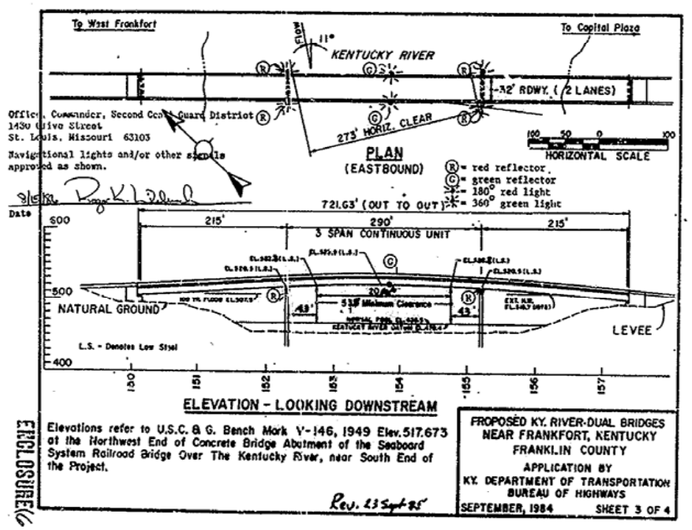

ENCLOSURE(6)

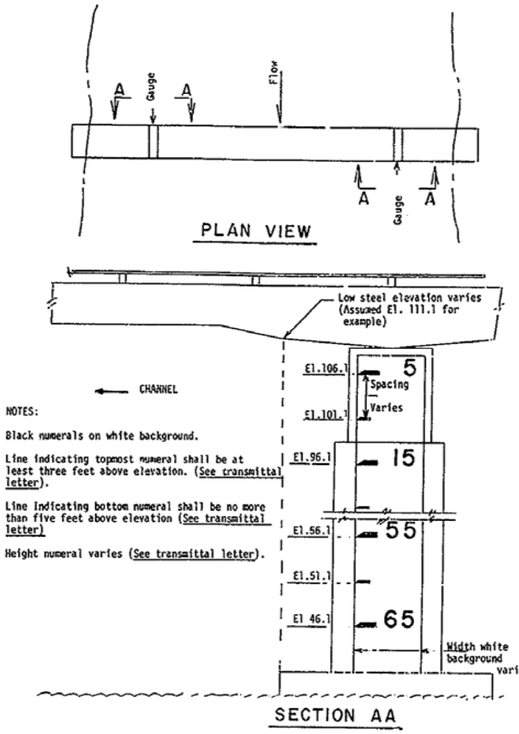

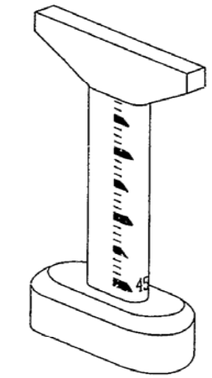

DIMETRIC VIEW OF PIER

Vertical Clearance Markings

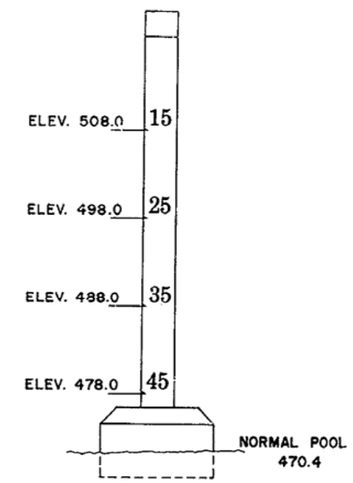

VERTICAL CLEARANCE MARKING

Capital Plaza - West Frankfort Connector
(Mero Street) Over The Kentucky River SHEET 5c

COAST GUARD PERMIT

COMMONWEALTH OF KENTUCKY
DEPARTMENT OF HIGHWAYS
FRANKFORT
COUNTY OF
FRANKLIN
CAPITAL PLAZA WEST FRANKFORT CONNECTOR ROAD
STATION
P. E. PROJECT NO.

CONSTRUCTION PROJECT NO.	MAINTENANCE PROJECT NO.	DRAWING NO.
		21450

DESIGNED BY WBC CHECKED BY DCD DATE 7-86 REVISED
DETAILED BY SWF CHECKED BY DCD DATE 7-86 REVISED
TRACED BY CHECKED BY DATE REVISED

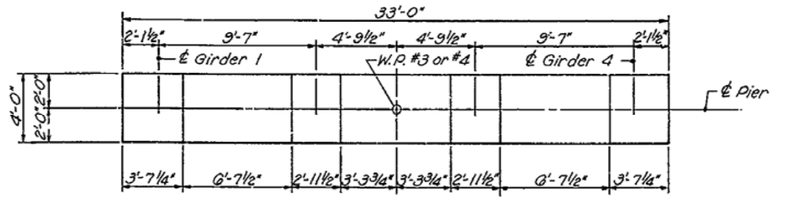

PLAN OF CAP

NOTE:
No. 18 bars in column shaft's may be furnished in two pieces (caisson cap dowels and shaft bars) and butt welded to develop in tension at least 125 % of the specified yield strength of the bars. Weld shall be made in accordance with AWS publication "Structural Welding Code Reinforcing Steel".

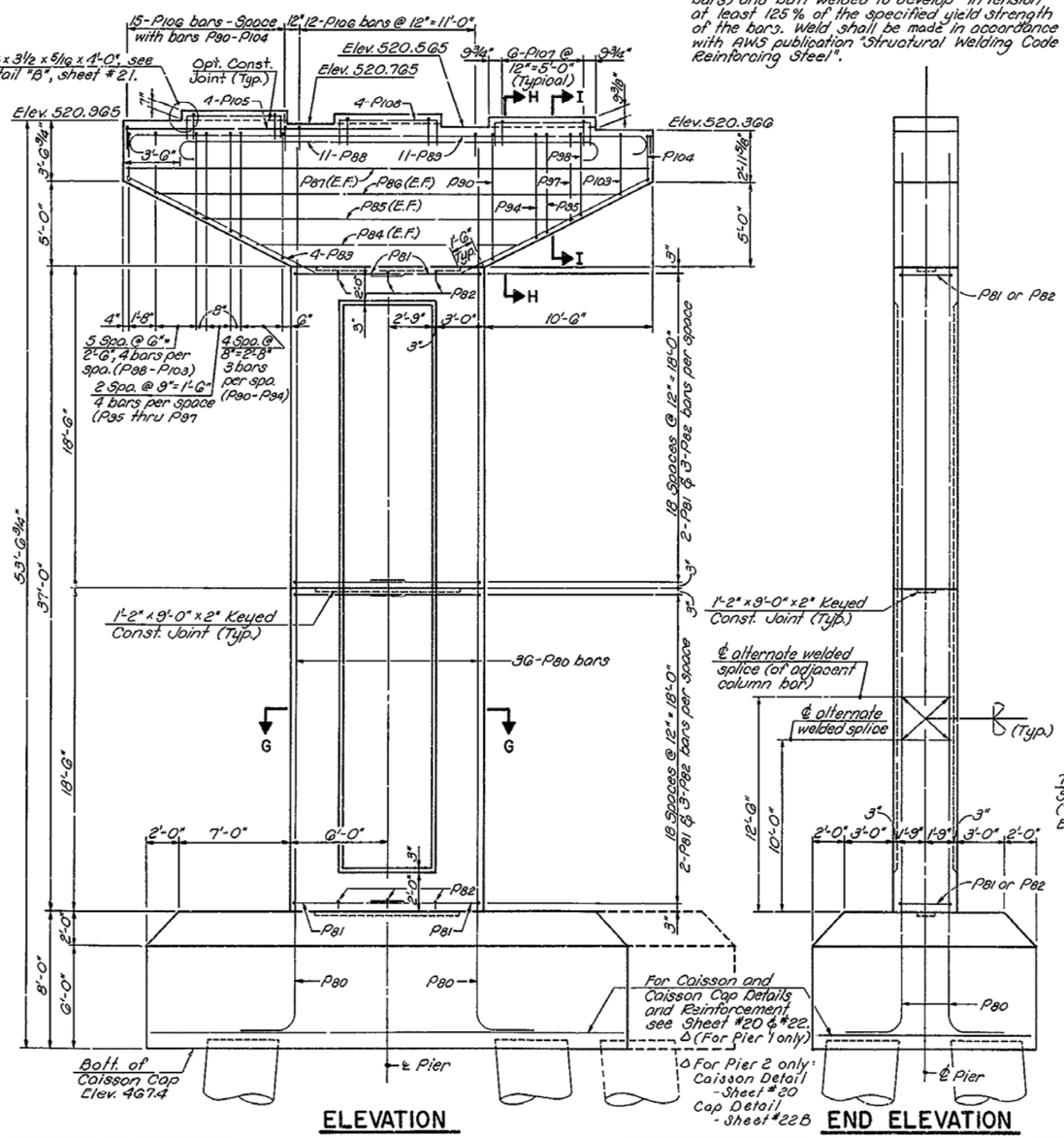

ELEVATION

END ELEVATION

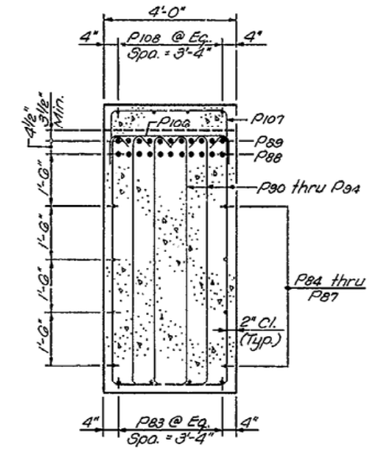

SECTION H-H

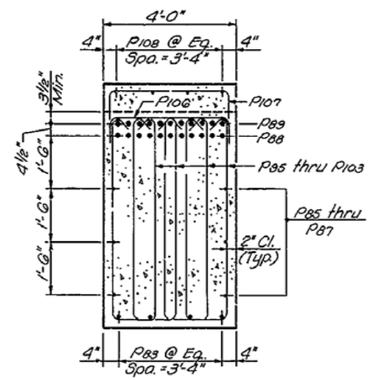

SECTION I-I

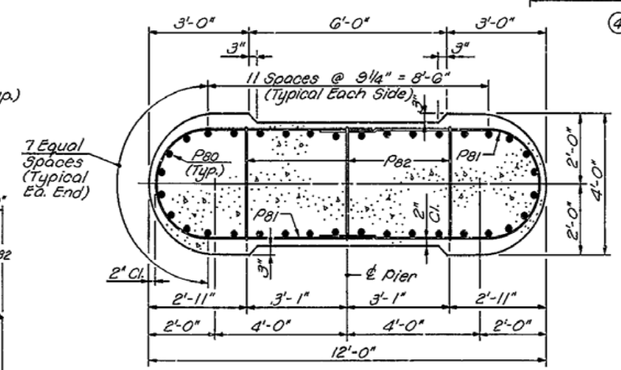

SECTION G-G

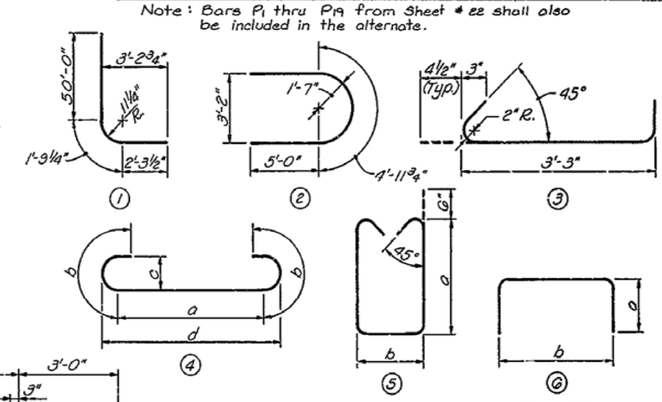

BILL OF REINFORCEMENT

MARK	TYPE	SIZE	NUMBER	LENGTH Ft.	LENGTH In.	LOCATION	a Ft.	a In.	b Ft.	b In.	c Ft.	c In.	d Ft.	d In.
P80	1	#18	36	54	1	Shaft								
P81	2	#4	76	15	0	Shaft								
P82	3	#4	114	4	0	Shaft								
P83	Str.	#6	8	13	2	Cap								
P84		#5	2	17	3									
P85			2	23	4									
P86			2	29	8									
P87	Str.	#5	2	32	8									
P88	4	#10	11	28	7		24	11¼	1	10	0¾	26	0	
P89	4	#10	11	35	1		31	5¼	1	10	1	0¾	32	6
P90	5	#5	6	17	10		7	5	2	3				
P91			6	17	2		7	1	2	3				
P92			6	16	6		6	9	2	3				
P93			6	15	11		6	5	2	3				
P94			6	15	2		6	1	2	3				
P95			8	13	7		5	9	1	3				
P96			8	12	11		5	5	1	3				
P97			8	12	3		5	1	1	3				
P98			8	11	7		4	9	1	3				
P99			8	11	1		4	6	1	3				
P100			8	10	7		4	3	1	3				
P101			8	10	1		4	0	1	3				
P102			8	9	9		3	10	1	3				
P103			8	9	3		3	7	1	3				
P104	5	#5	2	10	0		2	9	3	8				
P105	Str.	#4	4	16	6									
P106	6		42	5	7		1	0	3	8				
P107	6		18	6	7		1	6	3	8				
P108	6	#4	12	8	9	Cap	1	6	5	10				

Note: Bars P1 thru P19 from Sheet # 22 shall also be included in the alternate.

ESTIMATE OF QUANTITIES

ITEM	UNIT	QUANTITY PIER 1	QUANTITY PIER 2
CLASS "A" CONCRETE	CU. YD.	198.9	198.9
STEEL REINFORCEMENT	LBS.	38,269	38,269

Quantities shown above include all caisson cap, pier shaft, and pier cap concrete and reinforcement for the alternate.

Capital Plaza - West Frankfort Connector
(Mero Street) Over The Kentucky River SHEET 22A

COMMONWEALTH OF KENTUCKY
DEPARTMENT OF HIGHWAYS
FRANKFORT
COUNTY OF
FRANKLIN
CAPITAL PLAZA WEST FRANKFORT CONNECTOR ROAD

STATION 153+50.00 P. E. PROJECT NO.

CONSTRUCTION PROJECT NO. | MAINTENANCE PROJECT NO. | DRAWING NO. 21450

PIERS 1 & 2 (ALTERNATE)

UPDATE DATE
LETTING DATE

Δ Caisson Cap Details Pier 2

DESIGNED BY WBC CHECKED BY DDD DATE 1/87 REVISED
DETAILED BY WBC CHECKED BY WBC DATE 3/87 REVISED
TRACED BY ALF CHECKED BY DATE REVISED

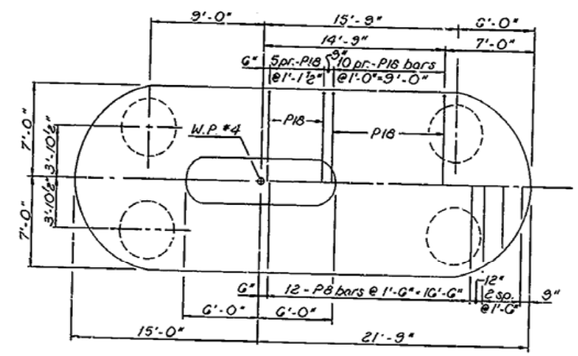

PLAN

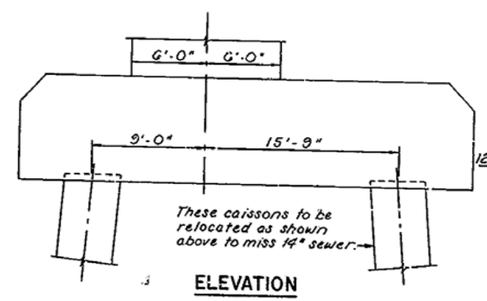

ELEVATION

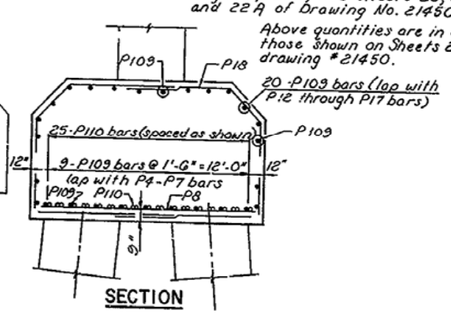

SECTION

BILL OF REINFORCEMENT						
MARK	TYPE	SIZE	NUMBER	LENGTH Ft.	LENGTH In.	LOCATION
P8	Str.	#9	5	12	6	Piers
P18	3	#6	14	14	9	
P109	Str.	#9	23	12	6	
P110	Str.	#11	25	22	6	Piers

ESTIMATE OF QUANTITIES		
ITEM	UNIT	QUANTITY
CLASS "A" CONCRETE	CU. YD.	27.0
STEEL REINFORCEMENT	LBS.	~~5017~~ 4744

NOTE: Reinforcing Bars and dimensions not shown are not changed from the original plans, See Sheets 20, 21, 22, and 22A of Drawing No. 21450.

Above quantities are in addition to those shown on Sheets 22 & 22A, drawing #21450.

PIER 2 DETAILS

Capital Plaza - West Frankfort Connector
(Mero Street) Over The Kentucky River SHEET 22B△

COMMONWEALTH OF KENTUCKY
DEPARTMENT OF HIGHWAYS
FRANKFORT
COUNTY OF
FRANKLIN
CAPITAL PLAZA WEST FRANKFORT CONNECTOR ROAD

STATION 153+50.00 P. E. PROJECT NO.

CONSTRUCTION PROJECT NO. | MAINTENANCE PROJECT NO. | DRAWING NO. 21450

DESIGNED BY DCD CHECKED BY WBC DATE 10-1987 REVISED △ Sheet Added
DETAILED BY TEL CHECKED BY WBC DATE 10-1987 REVISED Corrected Bar Sizes on P8 & P18 Bars, & Corr. Quantity
TRACED BY CHECKED BY DATE REVISED
UPDATE DATE
FITTING DATE
DATE 11-9-87 DATE 12-7-87 DATE

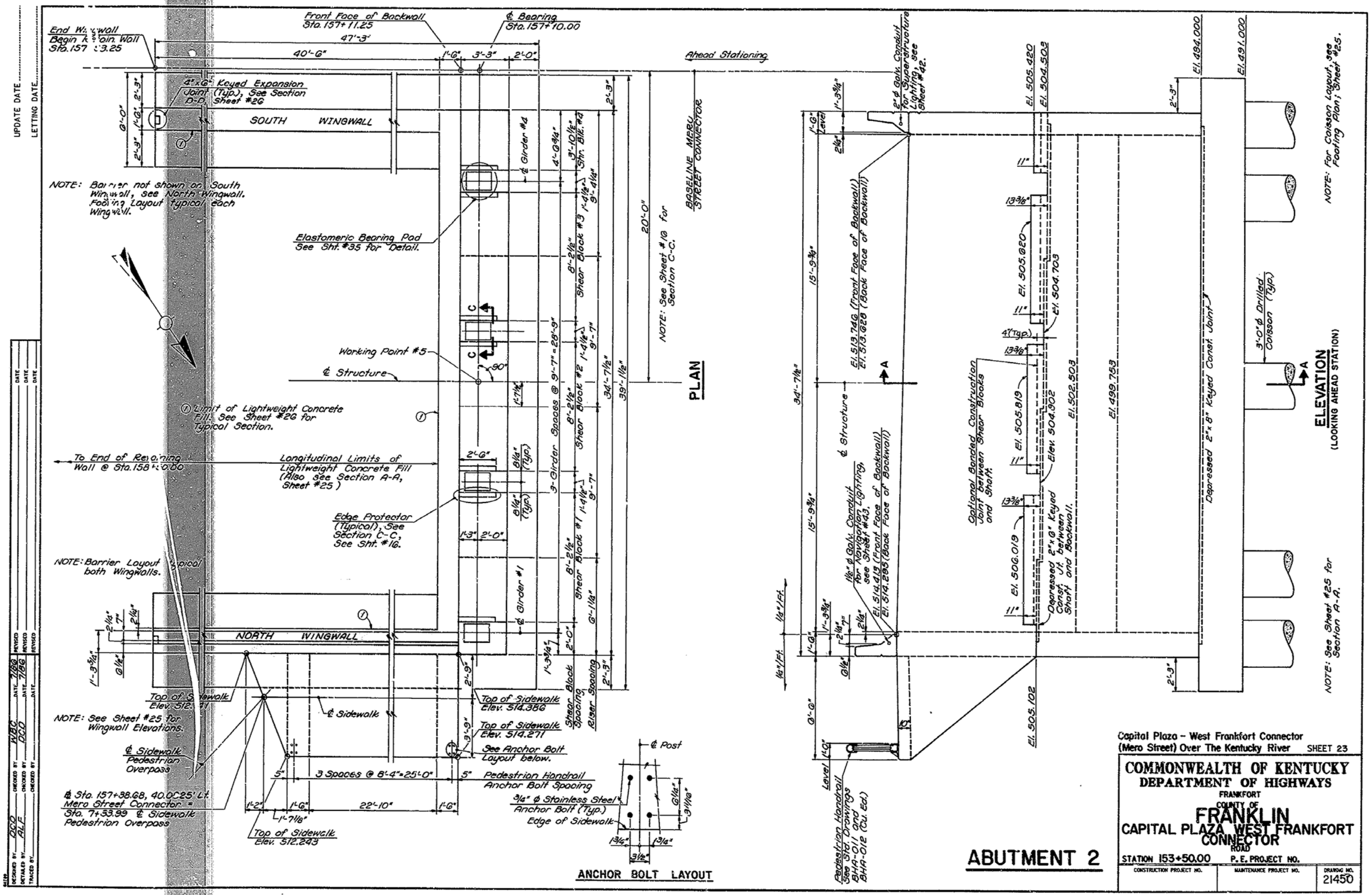
PLAN
ELEVATION
(LOOKING AHEAD STATION)
ANCHOR BOLT LAYOUT
ABUTMENT 2
SOUTH WINGWALL
NORTH WINGWALL
Front Face of Backwall Sta. 157+11.25
℄ Bearing Sta. 157+10.00
Ahead Stationing
BASELINE MERO STREET CONNECTOR
Elastomeric Bearing Pad See Sht. #35 for Detail.
Working Point #5
℄ Structure
Limit of Lightweight Concrete Fill See Sheet #26 for Typical Section.
To End of Retaining Wall @ Sta.158+00.00
Longitudinal Limits of Lightweight Concrete Fill (Also See Section A-A, Sheet #25)
Edge Protector (Typical), See Section C-C, See Sht. #16.
NOTE: See Sheet #16 for Section C-C.
NOTE: Barrier Layout Typical both Wingwalls.
NOTE: See Sheet #25 for Wingwall Elevations.
Top of Sidewalk Elev. 514.386
Top of Sidewalk Elev. 514.271
See Anchor Bolt Layout below.
Pedestrian Handrail Anchor Bolt Spacing
3/4" ϕ Stainless Steel Anchor Bolt (Typ.) Edge of Sidewalk
℄ Post
℄ Sidewalk Pedestrian Overpass
℄ Sta. 157+38.68, 40.00 25' Lt. Mero Street Connector = Sta. 7+33.99 ℄ Sidewalk Pedestrian Overpass
Top of Sidewalk Elev. 512.243
3 Spaces @ 8'-4" = 25'-0"
Shear Block Spacing
Girder Spacing
Optional Bonded Construction Joint between Shear Blocks and Shaft.
Depressed 2"x 8" Keyed Const. Joint
Depressed 2"x 8" Keyed Const. Joint and Backwall.
3'-0" ϕ Drilled Caisson (Typ.)
NOTE: For Caisson Layout, see Footing Plan; Sheet #25.
NOTE: See Sheet #25 for Section A-A.
Pedestrian Handrail See Std. Drawings BHA-011 and BHA-012 (Cu. Ed.)
Capital Plaza – West Frankfort Connector (Mero Street) Over The Kentucky River SHEET 23
COMMONWEALTH OF KENTUCKY
DEPARTMENT OF HIGHWAYS
FRANKFORT
COUNTY OF FRANKLIN
CAPITAL PLAZA WEST FRANKFORT CONNECTOR ROAD
STATION 153+50.00
P. E. PROJECT NO.
CONSTRUCTION PROJECT NO.
MAINTENANCE PROJECT NO.
DRAWING NO. 21450
UPDATE DATE
LETTING DATE
DESIGNED BY DCO
DETAILED BY ALF
TRACED BY
CHECKED BY DCO
CHECKED BY
REVISED 7/86
REVISED 7/86
REVISED
REVISED
REVISED

UPDATE DATE
LETTING DATE

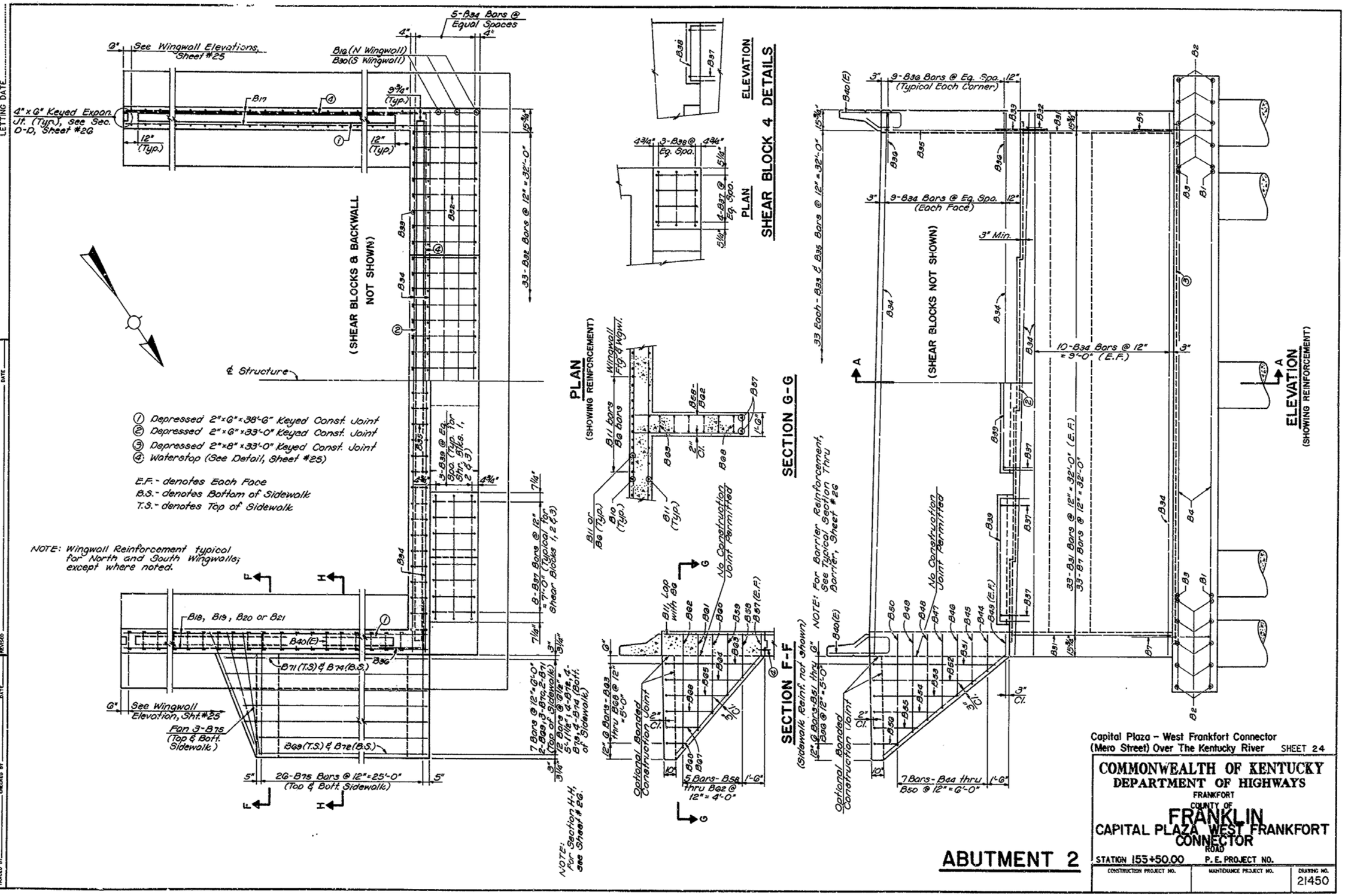

Capital Plaza – West Frankfort Connector
(Mero Street) Over The Kentucky River SHEET 24

ABUTMENT 2

COMMONWEALTH OF KENTUCKY
DEPARTMENT OF HIGHWAYS
FRANKFORT
COUNTY OF
FRANKLIN
CAPITAL PLAZA WEST FRANKFORT CONNECTOR
ROAD

STATION 153+50.00 P. E. PROJECT NO.

CONSTRUCTION PROJECT NO.	MAINTENANCE PROJECT NO.	DRAWING NO.
		21450

DESIGNED BY DCD	CHECKED BY WBC	DATE 7/86	REVISED
DETAILED BY ALF	CHECKED BY DCD	DATE 7/86	REVISED
TRACED BY	CHECKED BY	DATE	REVISED

DATE
DATE
DATE

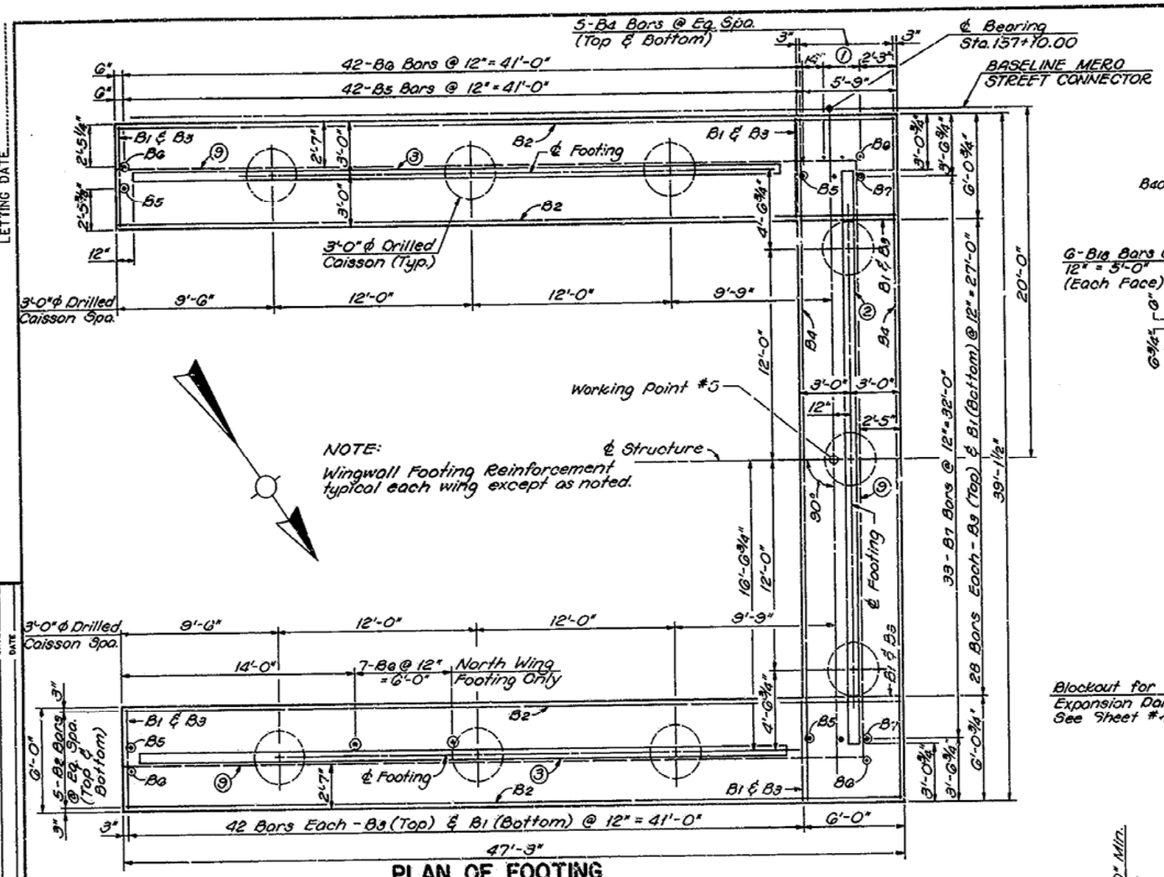

PLAN OF FOOTING

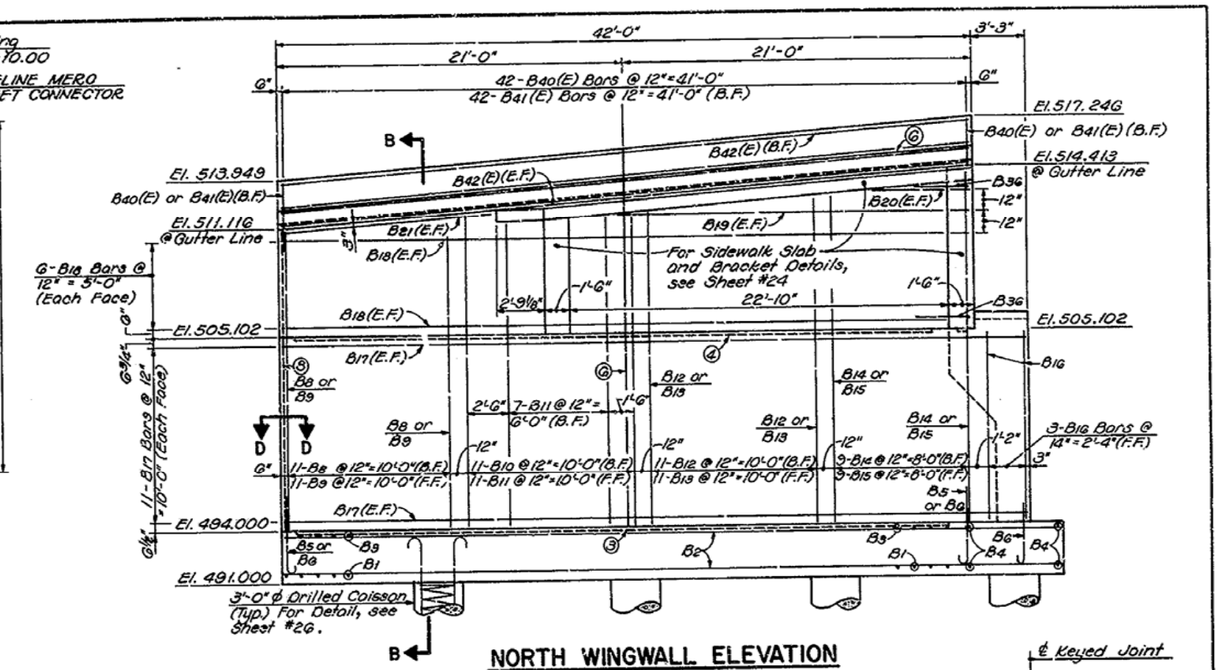

NORTH WINGWALL ELEVATION

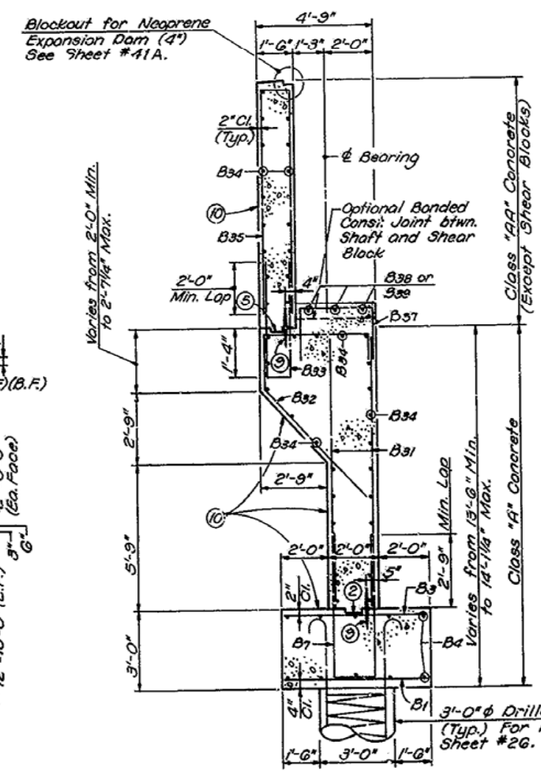

SECTION A-A

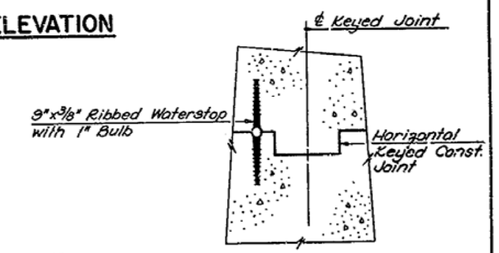

WATERSTOP DETAIL

Cost of all 9"x3/8" Ribbed Waterstops shall be incidental to Class "A" Concrete.

1. 3-B6 Bars @ 14" = 2'-4"
2. Depressed 2"x8"x33'-0" Keyed Const. Jt.
3. Depressed 2"x6"x39'-3" Keyed Const. Jt.
4. Depressed 2"x6"x38'-6" Keyed Const. Jt.
5. Depressed 2"x6"x33'-0" Keyed Const. Jt.
6. Rustication Groove (No construction joint permitted)
7. 4"x6"x16'-5 3/8" Keyed Expansion Joint
8. 4"x6"x17'-1 3/8" Keyed Expansion Joint
9. Waterstop (See Waterstop Detail, this Sheet)
10. Limit of Lightweight Concrete Fill

NOTE: For Sections B-B and D-D, see Sheet #2G

F.F. - Denotes Front Face
B.F. - Denotes Back Face
E.F. - Denotes Each Face

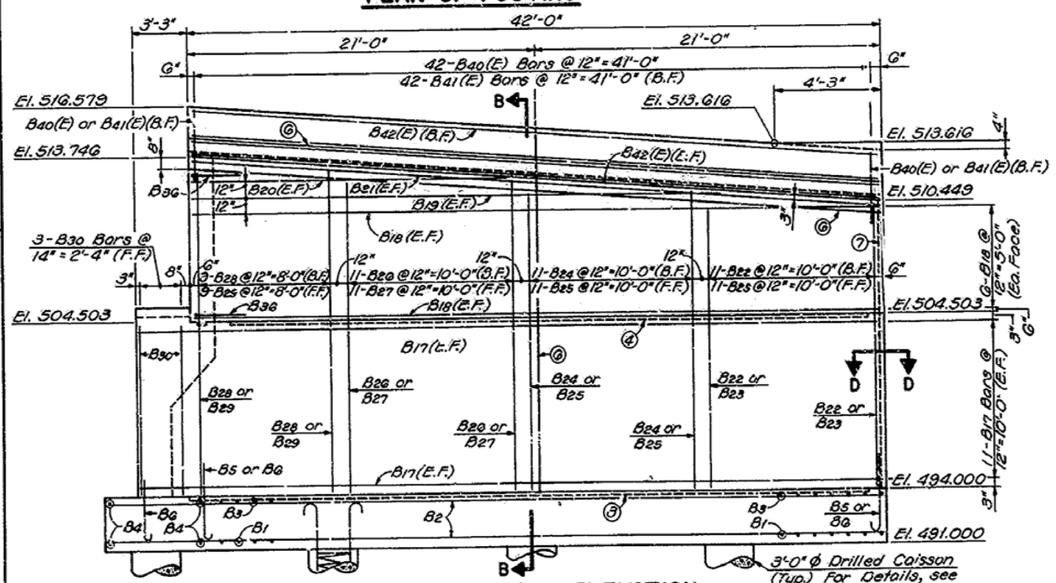

SOUTH WINGWALL ELEVATION

ABUTMENT 2

Capital Plaza – West Frankfort Connector (Mero Street) Over The Kentucky River — SHEET 25

COMMONWEALTH OF KENTUCKY
DEPARTMENT OF HIGHWAYS
FRANKFORT
COUNTY OF
FRANKLIN
CAPITAL PLAZA WEST FRANKFORT CONNECTOR ROAD

STATION 153+50.00 — P. E. PROJECT NO.

CONSTRUCTION PROJECT NO. — MAINTENANCE PROJECT NO. — DRAWING NO. 21450

UPDATE DATE ..... LETTING DATE .....

DATE — DATE — DATE

DESIGNED BY KJBC — CHECKED BY DCD — DATE 7/86 — REVISED
DETAILED BY DCD — CHECKED BY ALF — DATE 7/86 — REVISED
TRACED BY ..... — CHECKED BY ..... — DATE ..... — REVISED

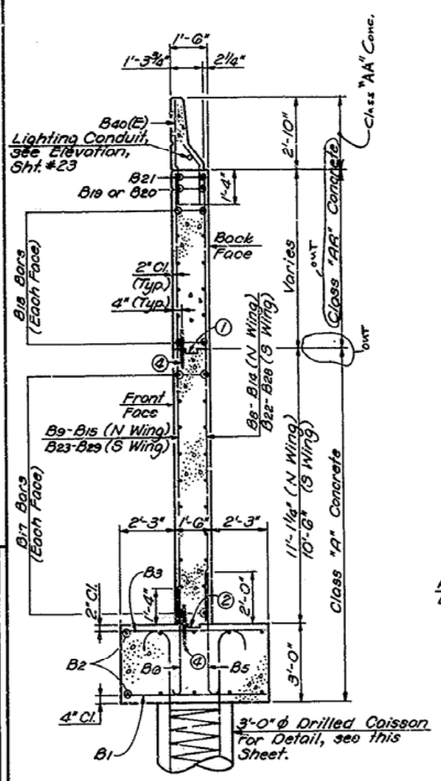

SECTION B-B

① Depressed 2"x6"x38'-6" Keyed Construction Joint
② Depressed 2"x6"x39'-3" Keyed Construction Joint
③ Rustication Groove (No construction joint permitted)
④ Waterstop (See Detail, Sheet #25)

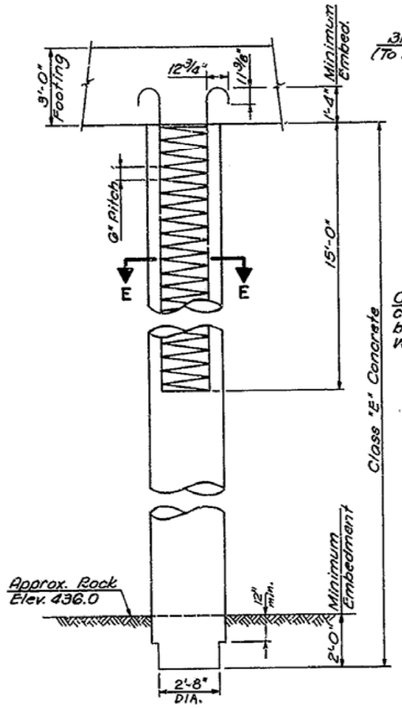

CAISSON DETAIL

NOTE: The unit price bid for 3'-0" ϕ Caissons / Lin. Ft. includes the unit cost of all Drilling, Class "E" Concrete, Reinforcement, Labor and Equipment necessary to construct Caissons in place.

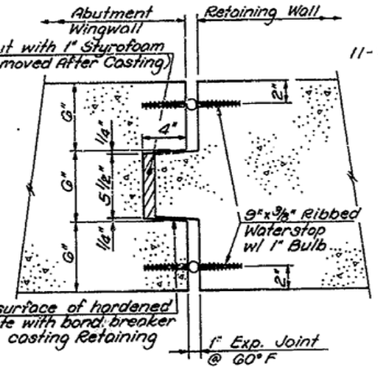

SECTION D-D

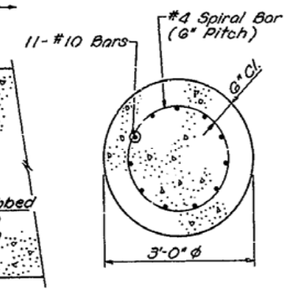

SECTION E-E

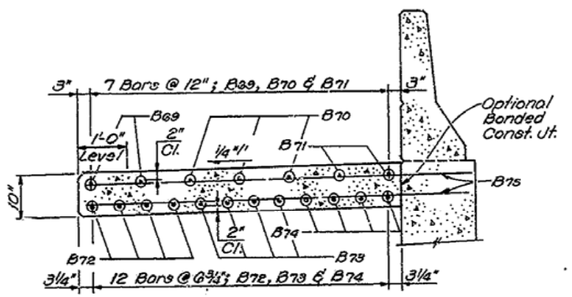

SECTION H-H

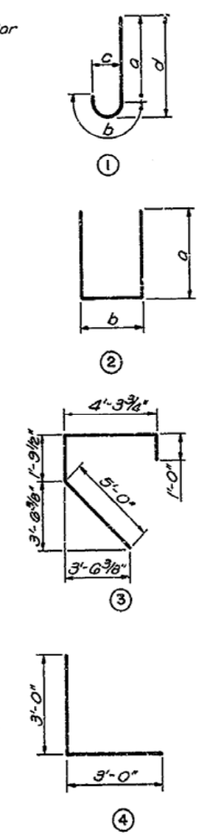

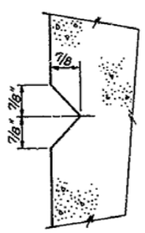

RUSTICATION GROOVE DETAIL

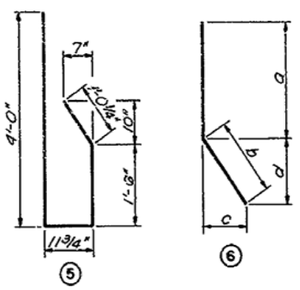

BILL OF REINFORCEMENT

MARK	TYPE	SIZE	NUMBER	LENGTH Ft.	LENGTH In.	LOCATION	a Ft.	a In.	b Ft.	b In.	c Ft.	c In.	d Ft.	d In.
B1	Str.	#5	112	5	8	Footing								
B2		#4	20	40	11									
B3		#7	112	5	8									
B4	Str.	#4	10	38	10	Footing								
B5	①	#6	84	5	4	Ftg. & Wgwl.	4	5	1	0	0	6	4	8
B6	①	#4	97	4	6	Ftg. & Wgwl.	3	10	0	8	0	4	4	0
B7	②	#7	35	12	4	Ftg. & Shaft	5	5	1	8				
B8	Str.	#6	11	16	11	N Wingwall								
B9		#4	11	16	11									
B10		#6	11	17	11									
B11		#4	18	17	11									
B12		#6	11	18	9									
B13		#4	11	18	9									
B14		#6	9	19	7									
B15		#4	9	18	7									
B16			3	10	11	N Wingwall								
B17			44	44	11	Wingwalls								
B18			24	41	8									
B19			4	91	10									
B20			4	19	2									
B21		#4	4	41	9	Wingwalls								
B22		#6	11	16	3	S Wingwall								
B23		#4		16	9									
B24		#6		17	2									
B25		#4		17	2									
B26		#6		18	0									
B27		#4	11	18	0									
B28		#6	9	18	10									
B29		#4	9	18	10									
B30		#4	3	10	4	S Wingwall								
B31	Str.	#7	66	10	4	Shaft								
B32	③	#5	33	12	1	Shaft								
B33	②	#6	33	8	11	Shaft & Bkwl.	3	11	1	2				
B34	Str.	#4	43	34	4	Shaft & Bkwl.								
B35	②	#6	33	18	11	Backwall	8	11	1	2				
B36	④	#4	18	6	0	Bkwl. & Wgwl.								
B37	②		26	6	10	Shear Block	2	0	2	11				
B38	②		3	7	6	Shear Block	2	0	3	7				
B39	②	#4	9	11	10	Shear Block	2	0	7	11				
B40(E)	⑤	#5	84	7	5	Barrier & Wgl.								
B41(E)	⑥		84	2	8	Barrier	1	7¾	1	0⅛	0	6½	0	10
B42(E)	Str.		14	41	9	Barrier								
B43	⑥		2	11	7	Sdwk. Bracket	10	4	1	3	0	11¾	0	9¼
B44	②		1	5	7		2	9	1	2				
B45				7	3		3	1						
B46				8	9		3	10						
B47				10	5		4	8						
B48				11	11		5	5						
B49				13	7		6	3						
B50				15	1		7	0	1	2				
B51				17	2		8	1	1	1				
B52				14	8		6	10						
B53				12	0		5	6						
B54				9	6		4	3						
B55				7	0		3	0						
B56	②		1	4	4		1	8	1	1				
B57	③		2	9	11		8	8	1	3	0	10½	0	10½
B58	②		1	6	5		2	8	1	2				
B59				8	7		3	9						
B60				10	9		4	10						
B61				12	11		5	11						
B62				15	1		7	0	1	2				
B63				13	6		6	3	1	1				
B64				11	6		5	3						
B65				9	6		4	3						
B66				7	6		3	3						
B67				5	6		2	3						
B68	②	#5	1	3	8	Sdwk. Bracket	1	4	1	1				
B69	Str.	#4	2	25	8	Sidewalk Slab								
B70		#4	3	26	6									
B71		#4	2	27	9									
B72		#6	4	25	8									
B73		#6	4	26	6									
B74		#6	4	27	6									
B75	Str.	#4	58	7	8	Sidewalk Slab								

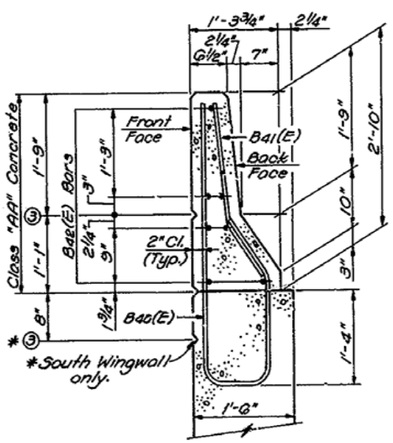

TYPICAL SECTION THRU BARRIER

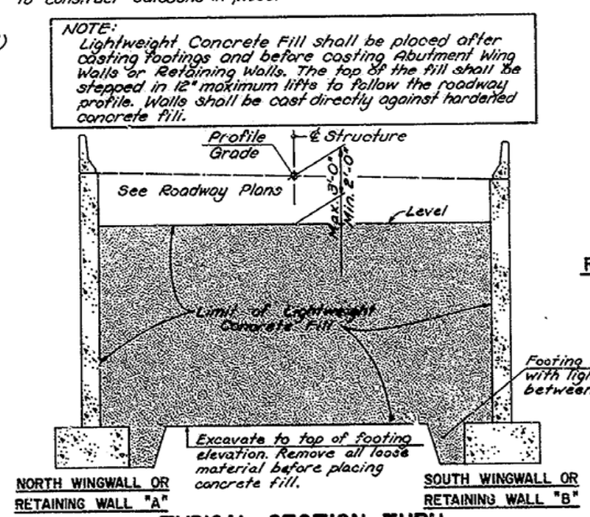

NOTE:
Lightweight Concrete Fill shall be placed after casting footings and before casting Abutment Wing Walls or Retaining Walls. The top of the fill shall be stepped in 12" maximum lifts to follow the roadway profile. Walls shall be cast directly against hardened concrete fill.

TYPICAL SECTION THRU LIGHTWEIGHT CONCRETE FILL

NOTE: For longitudinal limits of Lightweight Concrete Fill, see Sheet #23.

ESTIMATE OF QUANTITIES

ITEM	UNIT	QUANTITY
CLASS "A" CONCRETE	CU YD	(177.0) - 2 = 12.0
CLASS "AA" CONCRETE	CU YD	(67.2) - 3 = 2.0
STEEL REINFORCEMENT	LBS	15,920
EPOXY COATED STEEL REINFORCEMENT	LBS	1,493

ABUTMENT 2

Capital Plaza - West Frankfort Connector (Mero Street) Over The Kentucky River SHEET 26

COMMONWEALTH OF KENTUCKY
DEPARTMENT OF HIGHWAYS
FRANKFORT
COUNTY OF
FRANKLIN
CAPITAL PLAZA WEST FRANKFORT CONNECTOR ROAD

STATION 153+50.00 P.E. PROJECT NO.

CONSTRUCTION PROJECT NO. | MAINTENANCE PROJECT NO. | DRAWING NO. 21450

UPDATE DATE
LETTING DATE

DATE 6-22-88 | DATE 11 | DATE

Quantities, Class "A" & "AA" Concrete
Section B-B - Cassisted Limits of "A" & "AA" Concrete

REVISED | REVISED | REVISED

DATE 7/88 | DATE 7/88 | DATE

DESIGNED BY WBC | CHECKED BY
DETAILED BY DCD | CHECKED BY DCD
TRACED BY ALF | CHECKED BY ALF

UPDATE DATE

LETTING DATE

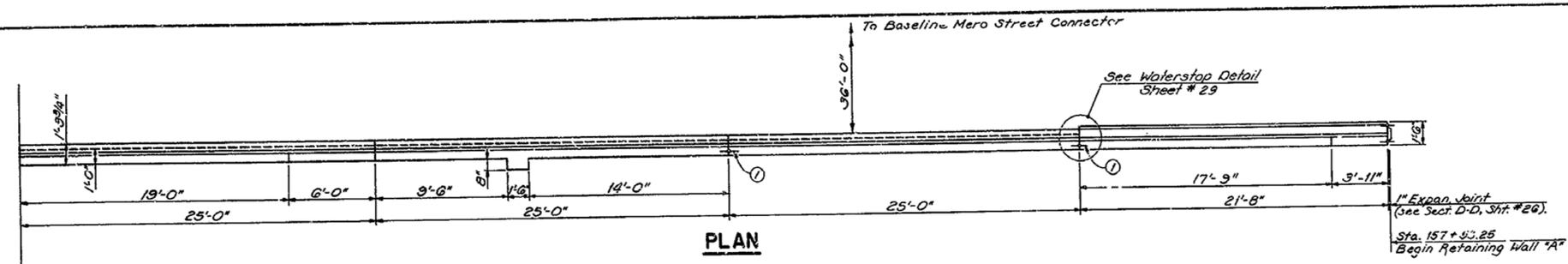

PLAN

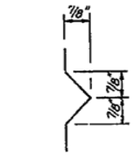

RUSTICATION GROOVE DETAIL

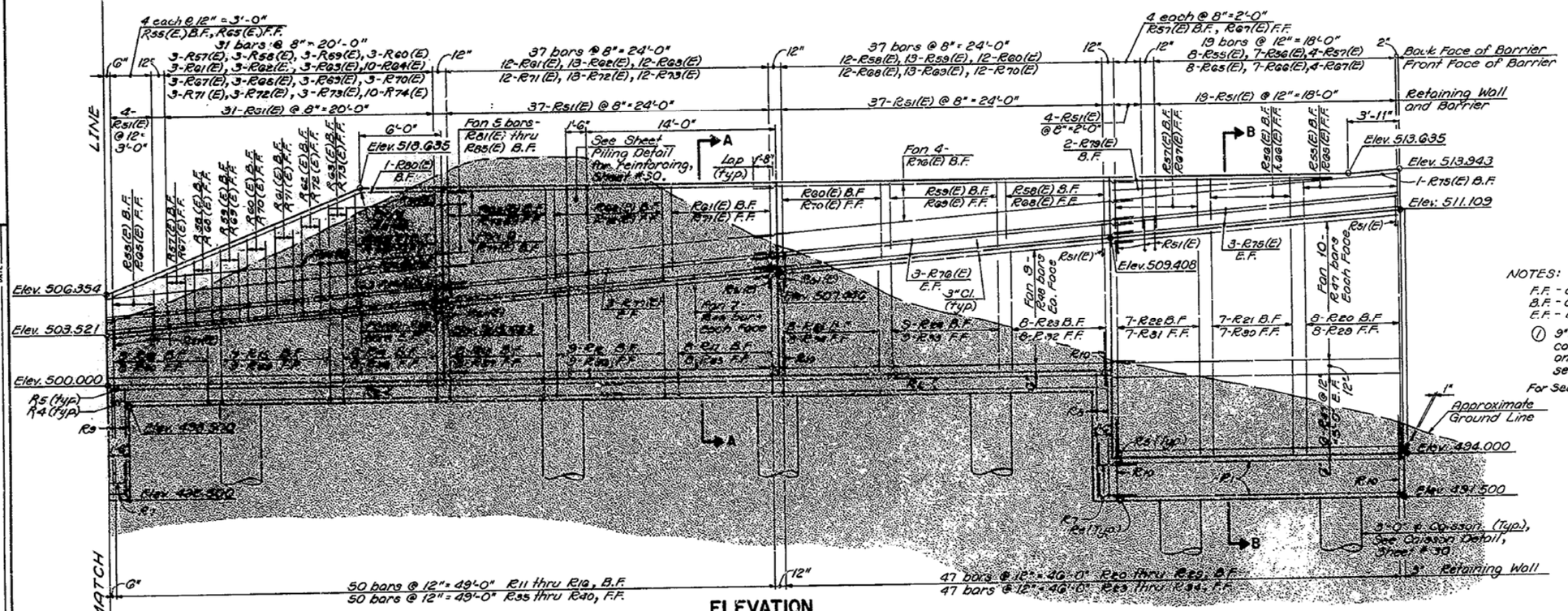

ELEVATION

NOTES:

F.F. - denotes Front Face
B.F. - denotes Back Face
E.F. - denotes Each Face

(1) 9"x3/8" Waterstop with 1" bulb continuous between top of wall and top of footing. For details see Sheet #29.

For Sects. A-A & B-B, see Sheet #28.

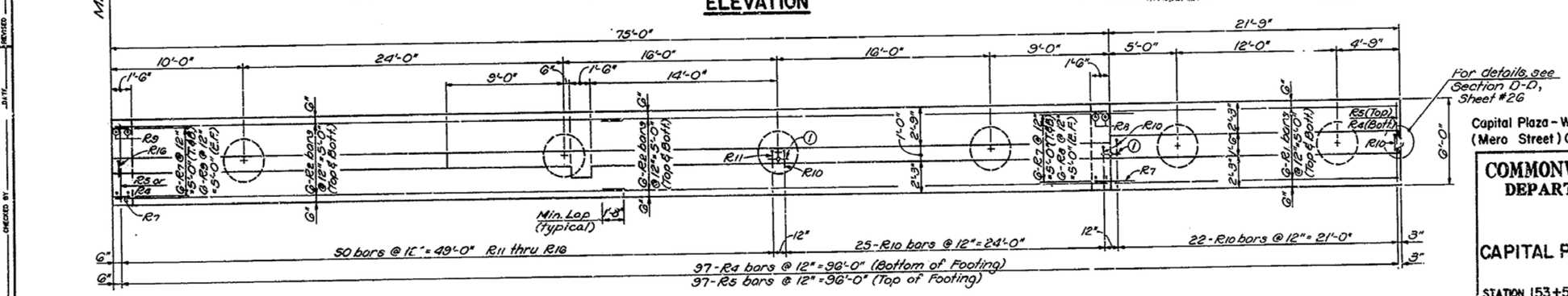

PLAN OF FOOTING

RETAINING WALL A

Capital Plaza - West Frankfort Connector (Mero Street) Over The Kentucky River SHEET 27

COMMONWEALTH OF KENTUCKY
DEPARTMENT OF HIGHWAYS
FRANKFORT
COUNTY OF
FRANKLIN
CAPITAL PLAZA WEST FRANKFORT CONNECTOR ROAD

STATION 153+50.00 P. E. PROJECT NO.

CONSTRUCTION PROJECT NO. | MAINTENANCE PROJECT NO. | DRAWING NO. 21450

DESIGNED BY DCD	CHECKED BY WAC	DATE 7-86	REVISED
DETAILED BY SWP & RLF	CHECKED BY DCD	DATE 7-86	REVISED
TRACED BY	CHECKED BY	DATE	REVISED

DATE
DATE
DATE

UPDATE DATE

LETTING DATE

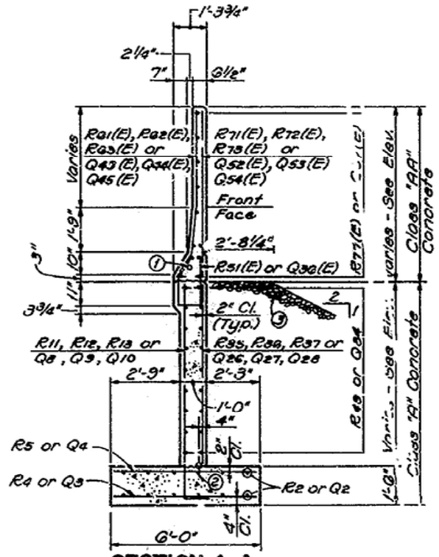

SECTION A-A

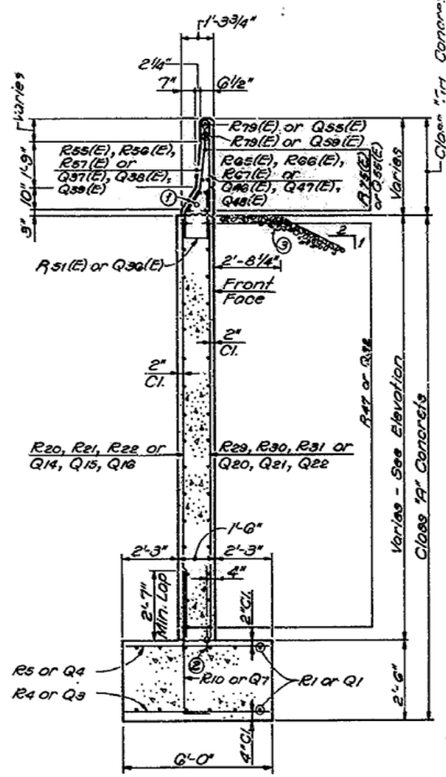

SECTION B-B

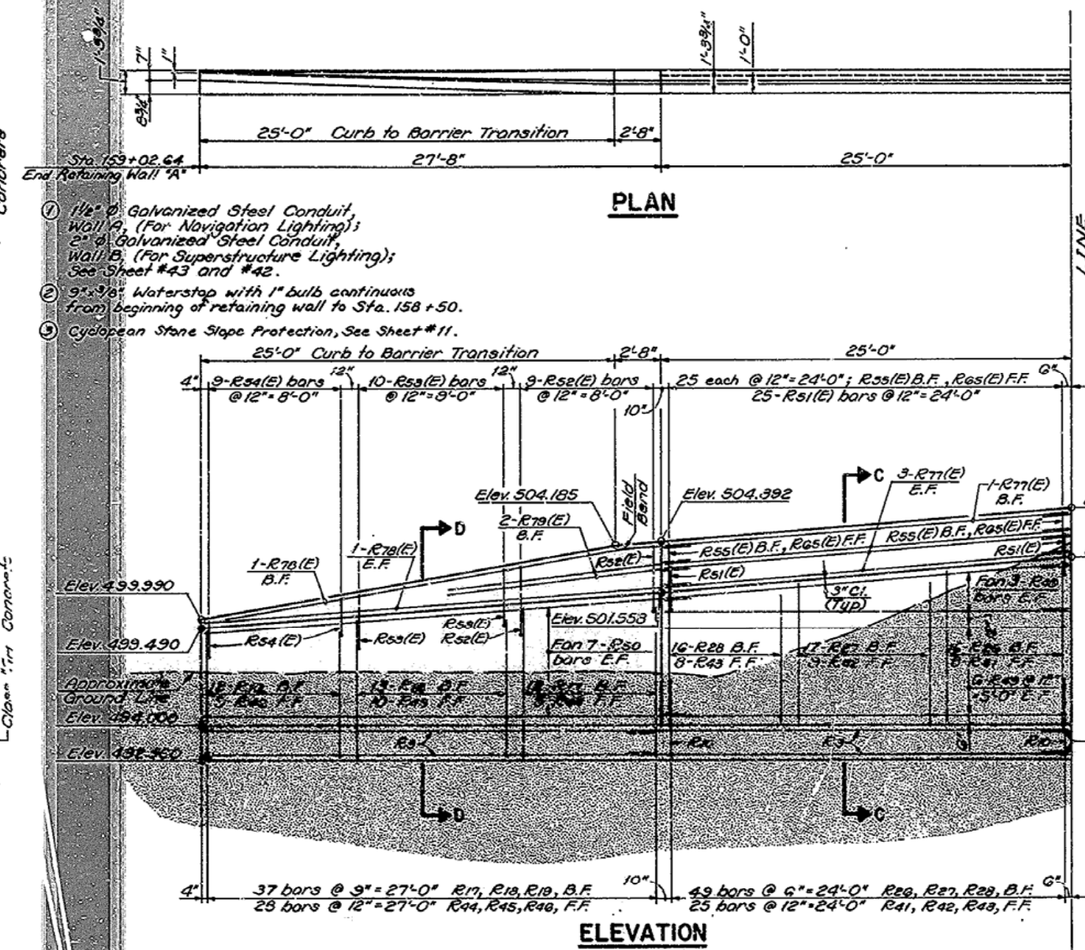

PLAN

ELEVATION

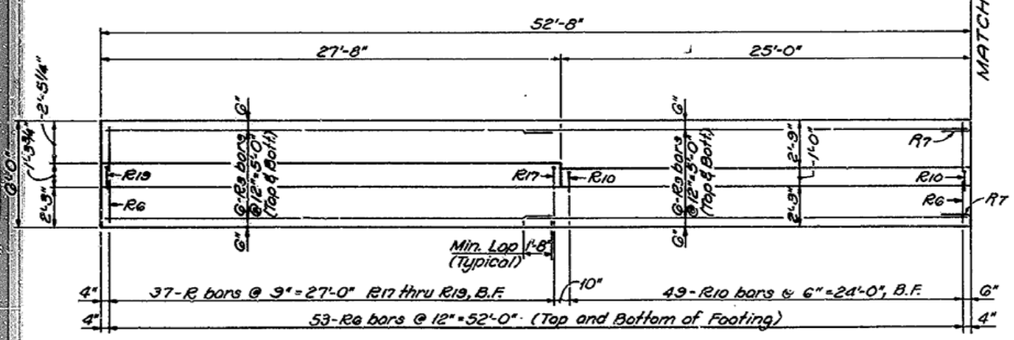

PLAN OF FOOTING

NOTE:
B.F. - denotes Front Face
B.F. - denotes Back Face
E.F. - denotes Each Face

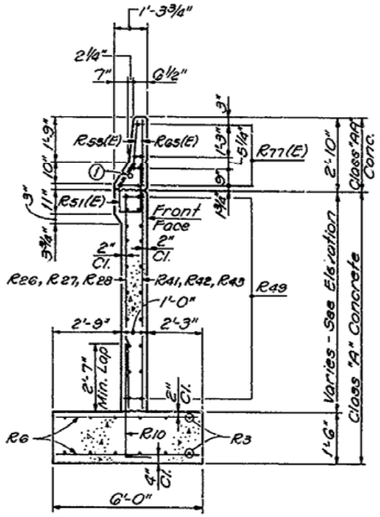

SECTION C-C

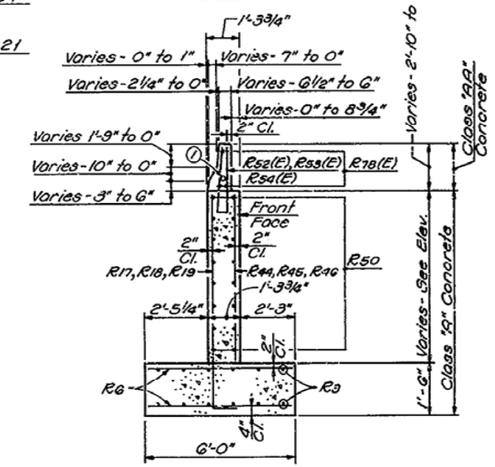

SECTION D-D

Lightweight Concrete Fill is to be placed between Walls A and B after footings are cast and before walls are cast. Walls shall be cast directly against hardened Lightweight Concrete Fill. For limits of Lightweight Concrete Fill see Sht. #23.

Capital Plaza - West Frankfort Connector
(Mero Street) Over The Kentucky River SHEET 28

COMMONWEALTH OF KENTUCKY
DEPARTMENT OF HIGHWAYS
FRANKFORT
COUNTY OF
FRANKLIN
CAPITAL PLAZA WEST FRANKFORT CONNECTOR ROAD
STATION 153+50.00 P. E. PROJECT NO.

CONSTRUCTION PROJECT NO.	MAINTENANCE PROJECT NO.	DRAWING NO.
		21450

RETAINING WALL A

DESIGNED BY WBC	DATE 7-86	REVISED	DATE
DETAILED BY DDD	DATE 7-86	REVISED	DATE
TRACED BY SWF & PLF	CHECKED BY DDD	REVISED	DATE
	CHECKED BY		

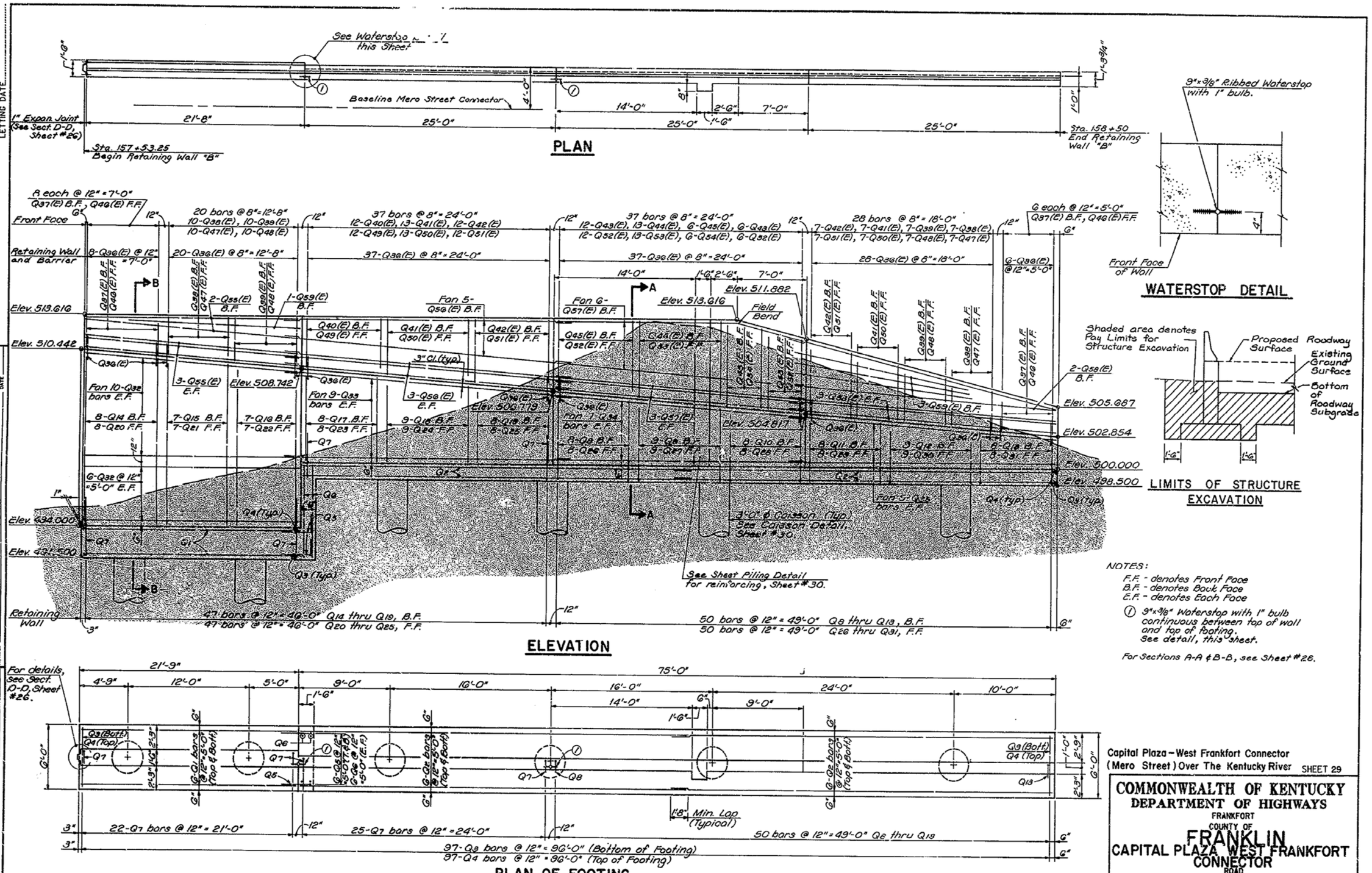

NOTES:

F.F. - denotes Front Face
B.F. - denotes Back Face
E.F. - denotes Each Face

① 9"x3/8" Waterstop with 1" bulb continuous between top of wall and top of footing. See detail, this sheet.

For Sections A-A & B-B, see Sheet #28.

Capital Plaza – West Frankfort Connector (Mero Street) Over The Kentucky River SHEET 29

COMMONWEALTH OF KENTUCKY
DEPARTMENT OF HIGHWAYS
FRANKFORT
COUNTY OF
FRANKLIN
CAPITAL PLAZA WEST FRANKFORT CONNECTOR ROAD

STATION 153+50.00 P.E. PROJECT NO.

CONSTRUCTION PROJECT NO.	MAINTENANCE PROJECT NO.	DRAWING NO.
		21450

UPDATE DATE
LETTING DATE

DESIGNED BY DCD CHECKED BY WRC
DETAILED BY SWF & ALF CHECKED BY DCD
TRACED BY CHECKED BY
REVISED DATE 7-86
REVISED DATE 7-86
REVISED DATE

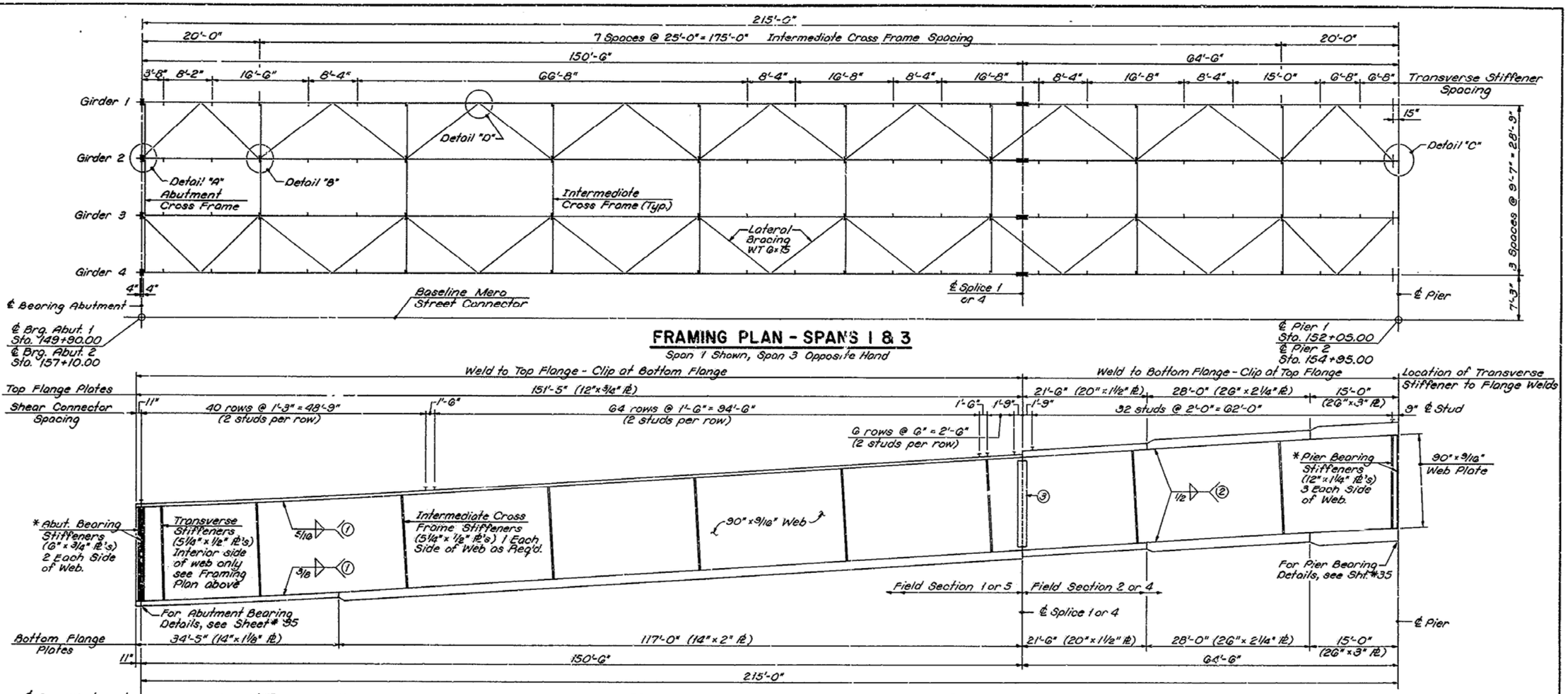

FRAMING PLAN - SPANS 1 & 3

Span 1 Shown, Span 3 Opposite Hand

* Bearing Stiffeners shall be vertical under dead load conditions. See Sheet #32.

GIRDER ELEVATION - SPANS 1 & 3

Span 1 Shown, Span 3 Similar

① Field Section 1 and 5
Top Flange - Web Weld : use 5/16" Fillets
Bot. Flange - Web Weld : use 3/8" Fillets

② Field Section 2 and 4
Use 1/2" Fillet Welds at both Top and Bottom Flanges

③ Field bolted splice may be made perpendicular to ℄ Girder

NOTE: All girder components including web, flanges, stiffeners and splice plates shall be Grade 50, A572 and/or A588 in accordance with AASHTO Article 10.2.2 thickness limitations. All cross frame and lateral bracing components including connection plates, angles, channels and WT sections shall be A36.

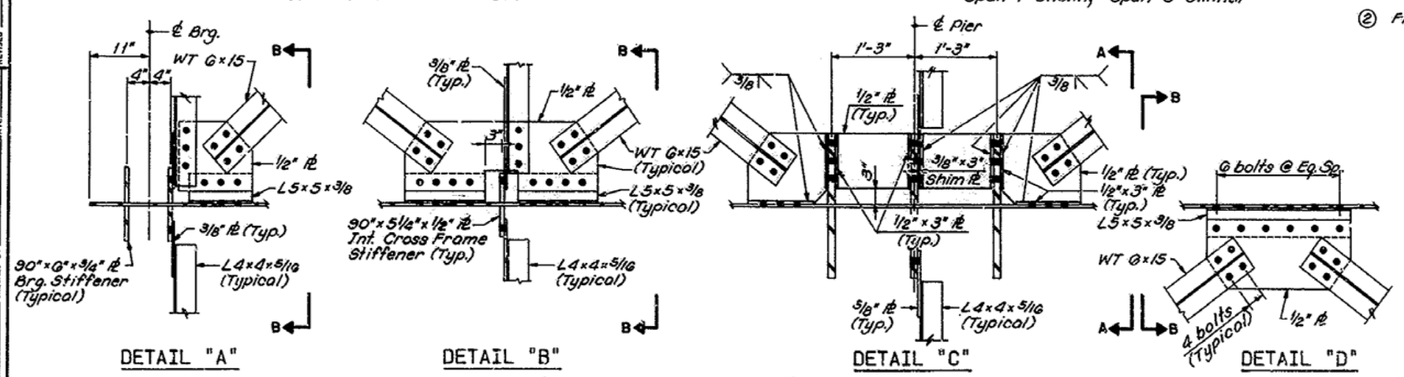

Note: All Cross Frame and Lateral Bracing Connections shall be made with 7/8" ϕ High Strength Bolts thru 1 1/16" ϕ Holes.

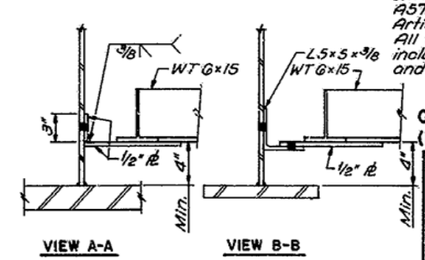

LATERAL BRACING CONNECTION

STRUCTURAL STEEL

Capital Plaza - West Frankfort Connector (Mero Street) Over The Kentucky River SHEET 31

COMMONWEALTH OF KENTUCKY
DEPARTMENT OF HIGHWAYS
FRANKFORT
COUNTY OF
FRANKLIN
CAPITAL PLAZA WEST FRANKFORT CONNECTOR ROAD
STATION 153+50.00 P. E. PROJECT NO.

CONSTRUCTION PROJECT NO.	MAINTENANCE PROJECT NO.	DRAWING NO.
		21450

UPDATE DATE
LETTING DATE

DESIGNED BY DCD CHECKED BY EHC DATE 4/86 REVISED
DETAILED BY ALF CHECKED BY EHC DATE 4/86 REVISED
TRACED BY CHECKED BY DATE REVISED

UPDATE DATE
LETTING DATE

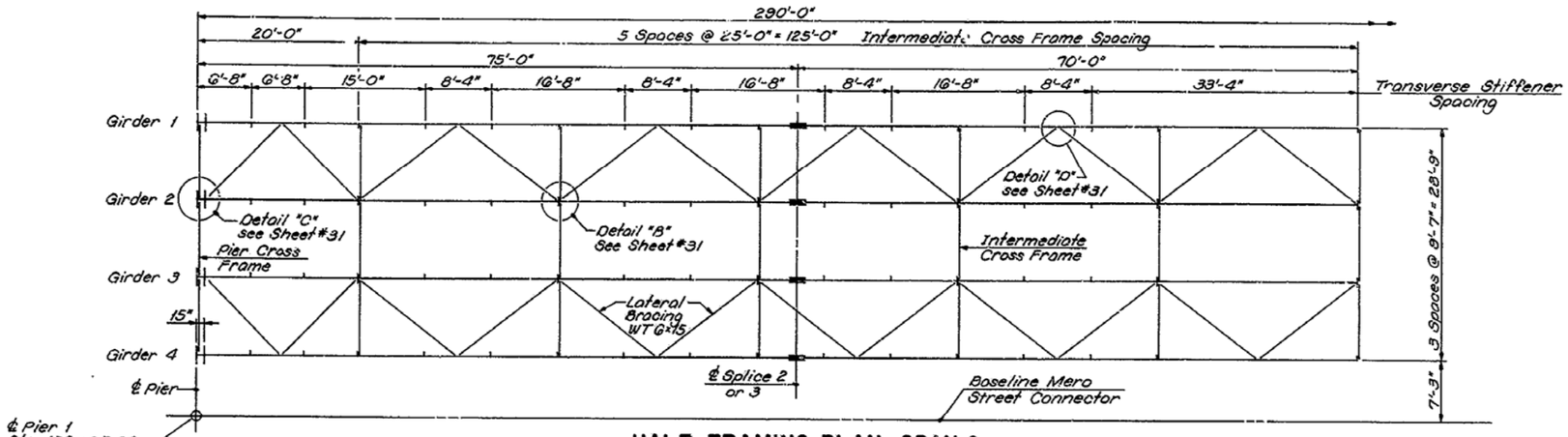

HALF FRAMING PLAN-SPAN 2

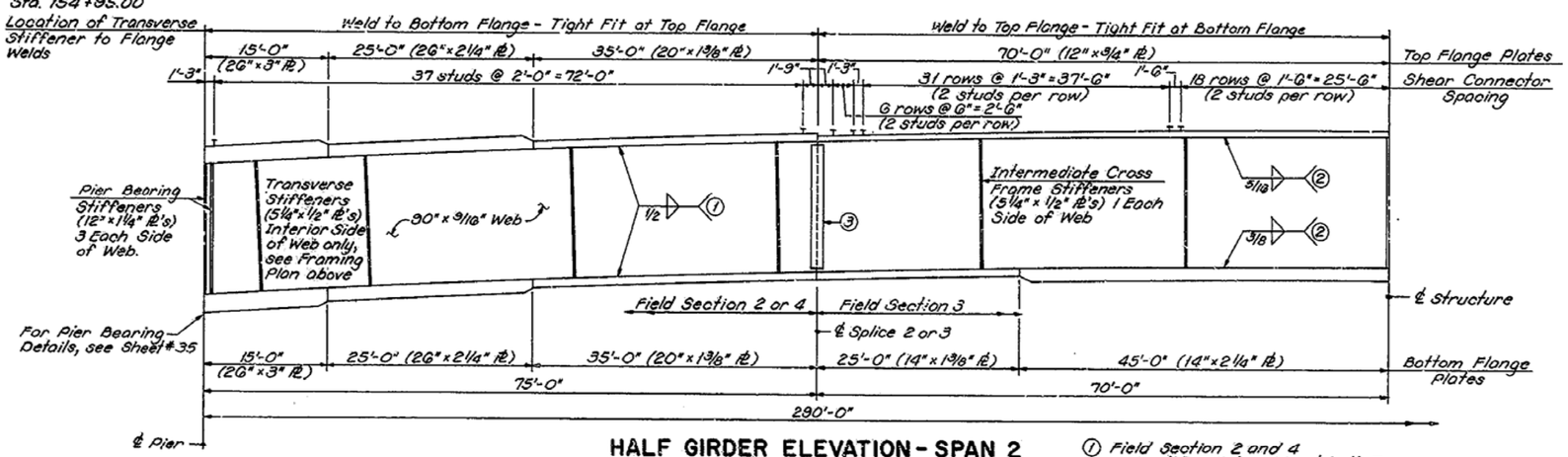

HALF GIRDER ELEVATION - SPAN 2

① Field Section 2 and 4
Use 1/2" Fillet welds at both Top and Bottom Flanges

② Field Section 3
Top Flange - Web Weld: use 5/16" Fillets
Bott. Flange - Web Weld: use 3/8" Fillets

③ Field bolted splice may be made perpendicular to ℄ Girder.

NOTE:
SHOP FLANGE AND WEB SPLICES TO BE STAGGERED BY A MINIMUM OF 1'-0"

NOTE: All girder components including web, flanges, stiffeners and splice plates shall be Grade 50, A572 and/or A588 in accordance with AASHTO Article 10.2.2 thickness limitations.
All cross frame and lateral bracing components including connection plates, angles, channels and WT sections shall be A36.

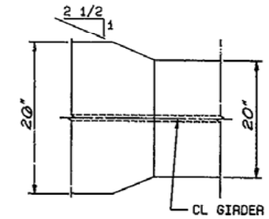

FLANGE PL TRANSITION

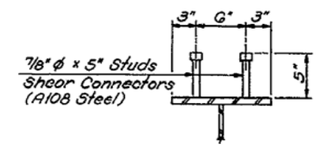

TYPICAL FIELD SECTIONS 1, 3 & 5

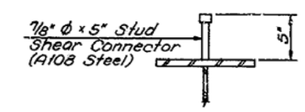

TYPICAL FIELD SECTIONS 2 & 4

SHEAR CONNECTOR DETAILS

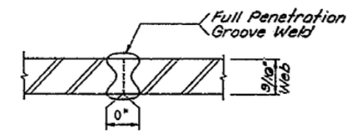

WEB SPLICE

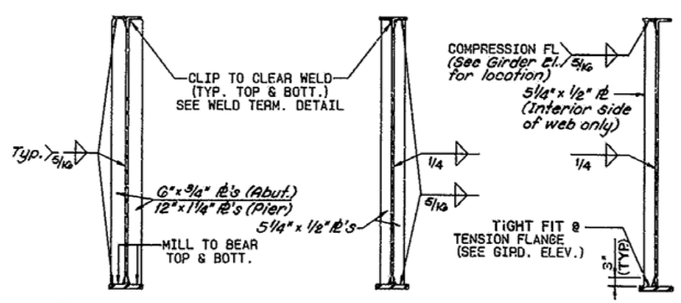

BEARING STIFFENERS — CROSS FRAME STIFF. — TRANSVERSE STIFF.

NOTE:
FLANGE TO WEB WELDS TO BE SINGLE PASS SUBMERGED ARC FILLET WELDS IN THE FLAT POSITION.

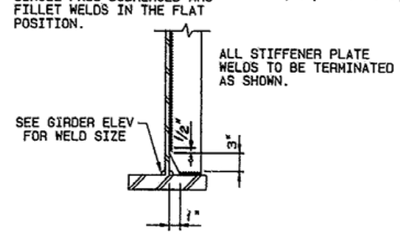

WELD TERMINATION DETAIL

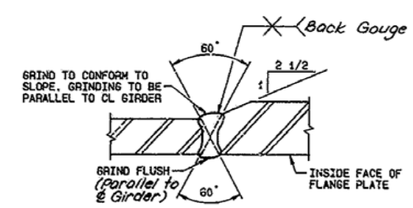

FLANGE SPLICE

STRUCTURAL STEEL

Capital Plaza - West Frankfort Connector
(Mero Street) Over The Kentucky River SHEET 32

COMMONWEALTH OF KENTUCKY
DEPARTMENT OF HIGHWAYS
FRANKFORT
COUNTY OF FRANKLIN
CAPITAL PLAZA WEST FRANKFORT CONNECTOR ROAD
STATION 153+50.00 P.E. PROJECT NO.

CONSTRUCTION PROJECT NO.	MAINTENANCE PROJECT NO.	DRAWING NO.
		21450

DESIGNED BY DCO	CHECKED BY	DATE 4-86	REVISED
DETAILED BY AL	CHECKED BY RHC	DATE 4-86	REVISED
TRACED BY	CHECKED BY	DATE	REVISED

UPDATE DATE
LETTING DATE

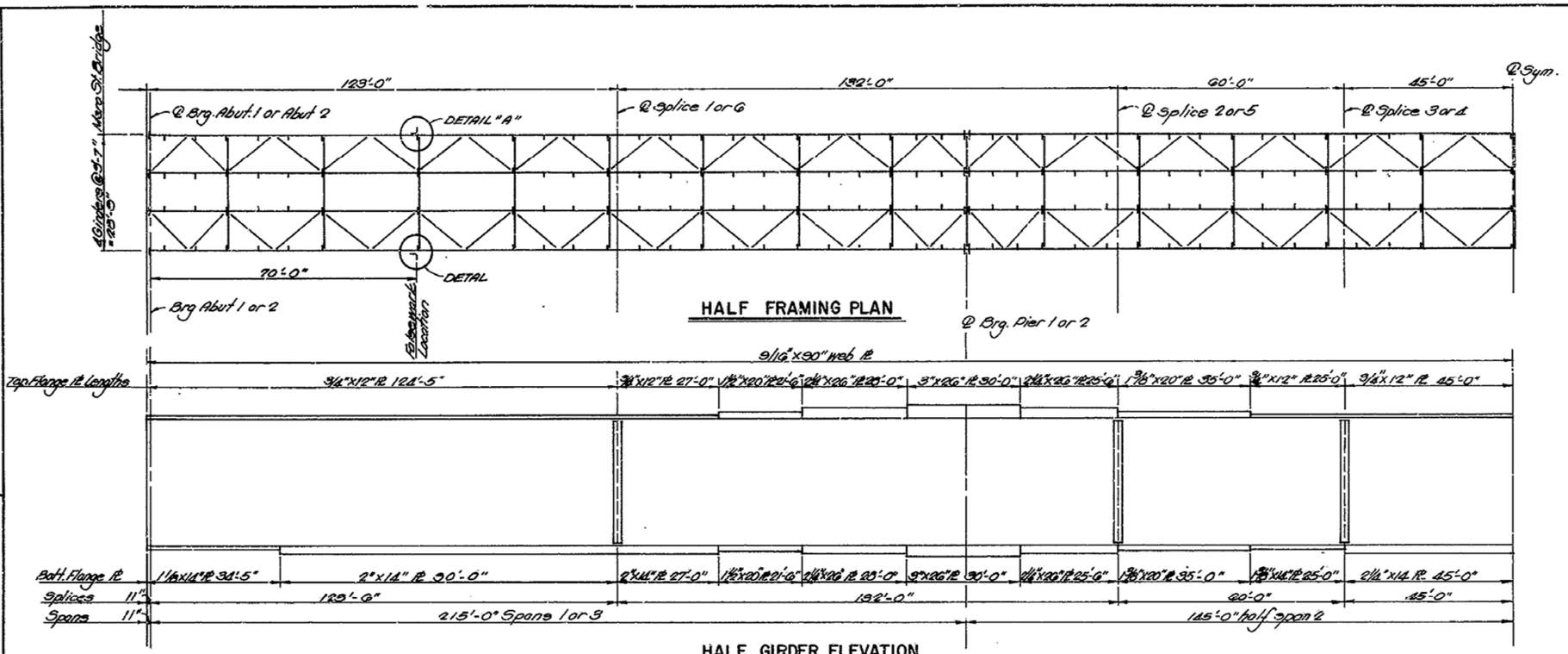

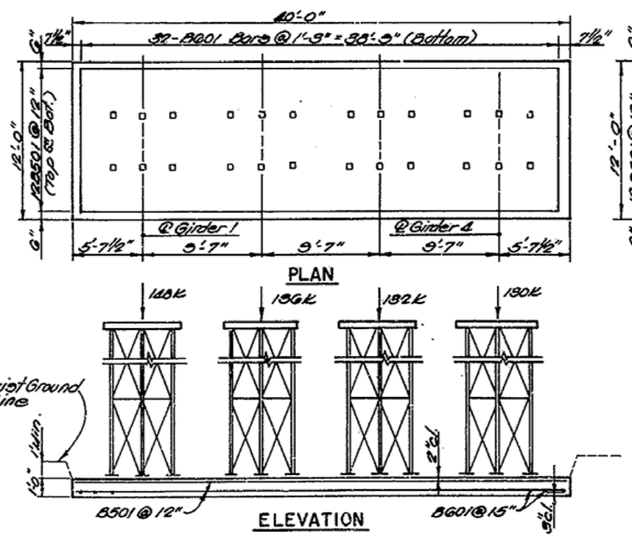

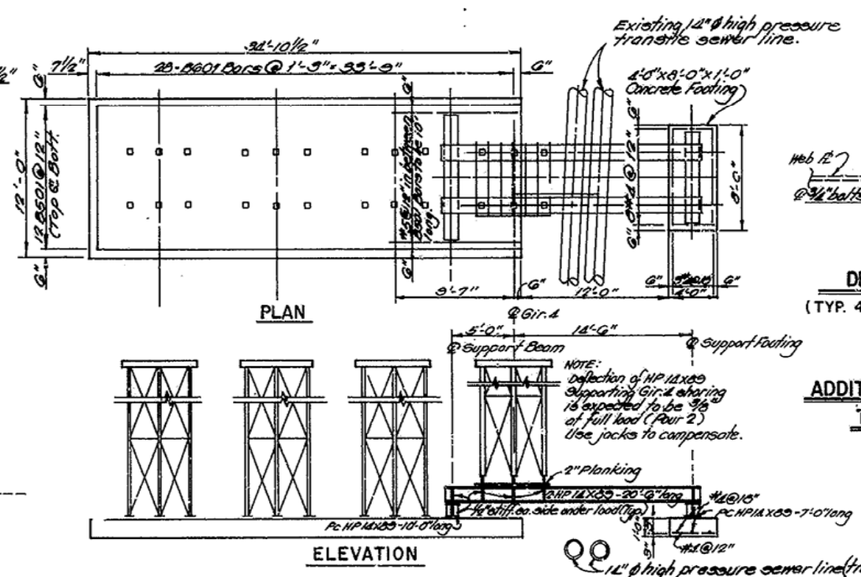

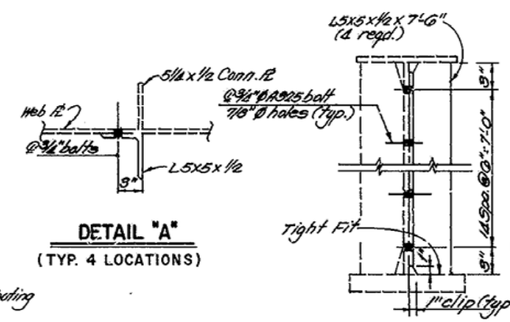

NOTE: FOR SPLICE DETAILS SEE SHOP DRAWINGS

ADDITIONAL STIFFENERS FOR TEMPORARY SHORING

(THESE FALSEWORK FOOTINGS ARE IN PLACE AND BURIED)

STRUCTURAL STEEL & FALSEWORK (AS BUILT)

Capital Plaza - West Frankfort Connector (Mero Street) Over The Kentucky River

SHEET 32A

COMMONWEALTH OF KENTUCKY
DEPARTMENT OF HIGHWAYS
FRANKFORT
COUNTY OF
FRANKLIN
CAPITAL PLAZA-WEST FRANKFORT CONNECTOR ROAD

STATION 153+50.00 | P.E. PROJECT NO.
CONSTRUCTION PROJECT NO. | MAINTENANCE PROJECT NO. | DRAWING NO. 21450

UPDATE DATE_____

LETTING DATE_____

Capital Plaza-West Frankfort Connector
Mero Street Bridge over Kentucky River
Frankfort, Kentucky

FALSEWORK JACKING SEQUENCE

In placing the deck pours in spans 1 and 3 of the subject structure, a jacking procedure should be followed. The following equipment is required:

1. 8- 100 ton single acting jacks with 6 5/8" stroke
2. 1- 100 ton pressure pumps (electric) and 1 manual 100 Ton pressure pump (stand-by)
3. 8- 100 ton pressure gauges
4. Necessary hoses and fittings

Screw jacks on the tower legs are to be used to plumb the towers. An arrangement of structural shapes should be selected so that the force from the girder jack will be equally distributed to all legs of the falsework tower. A downward deflection of 4" is expected when removing the girder jacks after the deck pours. For this reason three to four inches of steel plates should be placed under each jack to facilitate removal of the jacks after casting of the deck. Care should be taken so that no more than 1-1/2" of the ram travel on the girder jacks, is used in the initial setup. This will allow about 5" of stroke to remain to adjust the jack to compensate for any possible settlement of the falsework support slab. The purpose of the falsework is to prevent deflection of the girders at the falsework locations. The Engineer will install dial gauges in order to monitor these deflections and correct for any significant settlement of the falsework footings while placing concrete in the end spans. The compressibility of the hydraulic fluid will allow the jacks to compress slightly as the reaction increases, and this deflection should not be interpreted as settlement. The pressure gauges are used to monitor the load on the jacks. It should be noted that temperature changes will affect both the pressure in the hydraulic fluid and the falsework reactions due to the continuity of the structure. Therefore the jack pressures may vary more than the deflection readings.

After the falsework bents have been erected in span 1 and girder jacks brought to bear on the bottom flange, a preloading force of 50,000 lbs. shall be placed in each of the girder jacks and maintained for two hours. When increasing or decreasing pressure on the jacks, the differential between adjacent jacks shall be maintained as small as possible. An upward deflection of approximately 4" is expected due to the preloading force. At this time the deflection and jack pressure gauges shall be monitored to determine if any settlement is taking place in the falsework foundation slab. If no problem is apparent after two hours, the girder jack pressure shall be slowly reduced to produce a reaction of 1000 pounds per girder.

Before placing concrete in span 1, initial deflection readings shall be taken on the span 1 deflection gauges. Jack stops shall be installed at each jack to support the reaction in case of a jack failure. The jack stop shall have a clearance of 1/2" to 1" from the bottom of the flange. The deflection and pressure gauges shall be monitored during the pour and the deflection at the support towers shall be maintained within 1/2" of the initial reading. When deck pour 1 is complete and all construction equipment is removed from the span, final deflection and jack pressure readings shall be recorded. The deflection gauges and jack pressures shall then be monitored in accordance with a schedule to be determined by the Engineer. During this period the deflections shall be maintained within 1/2" of the final deflection readings and the jack reactions shall be monitored. After the span 1 deck concrete reaches a minimum compressive strength of 3000 psi, as indicated by test cylinders, the jacks in span 1 shall be locked-off before proceeding to pour span 3.

The procedure described for span 1 shall be repeated for the span 3 deck pour. When the span 3 deck concrete reaches a minimum strength of 3000 psi, the jacks and support towers in span 3 shall be removed, followed by the jacks and towers in span 1. A downward deflection of 4" is expected when removing the supports. In order to remove the jacks, the girders shall be slowly lowered on the jack stops and the shim plates under the jacks shall be removed. The jacks shall then be used to raise the girders approximately 1/4" clear of the jack stops. The jack stops can then be removed and the jacks can be slowly lowered and finally removed. Once the jacks in both end spans have been removed, span 2 may be poured in accordance with the pouring sequence.

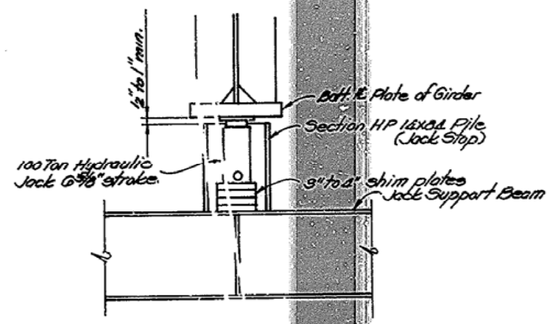

JACK & JACK STOP IN PLACE

Capital Plaza - West Frankfort Connector
(Mero Street) Over the Kentucky River

SHEET 32 B

COMMONWEALTH OF KENTUCKY
DEPARTMENT OF HIGHWAYS
FRANKFORT
COUNTY OF
FRANKLIN
CAPITAL PLAZA - WEST FRANKFORT CONNECTOR
ROAD

STATION 153+50.00 **P. E. PROJECT NO.**

CONSTRUCTION PROJECT NO.	MAINTENANCE PROJECT NO.	DRAWING NO.
		21450

DESIGNED BY_____ DATE_____ CHECKED BY_____ DATE_____ CHECKED BY_____ DATE_____
DETAILED BY_____ DATE_____ CHECKED BY_____ DATE_____
TRACED BY_____ DATE_____ CHECKED BY_____ DATE_____

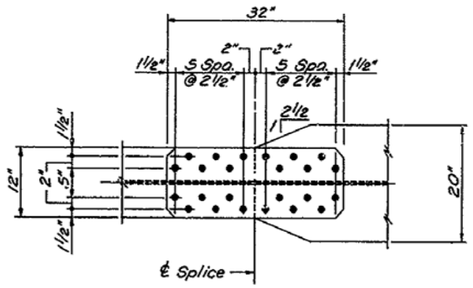

PLAN - TOP FLANGE SPLICE PLATE

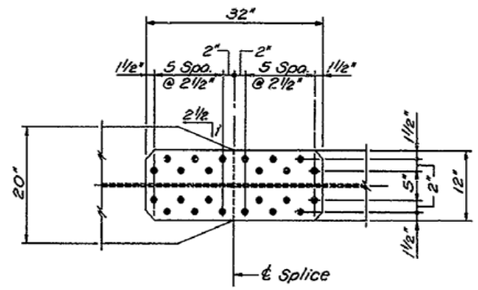

PLAN - TOP FLANGE SPLICE PLATE

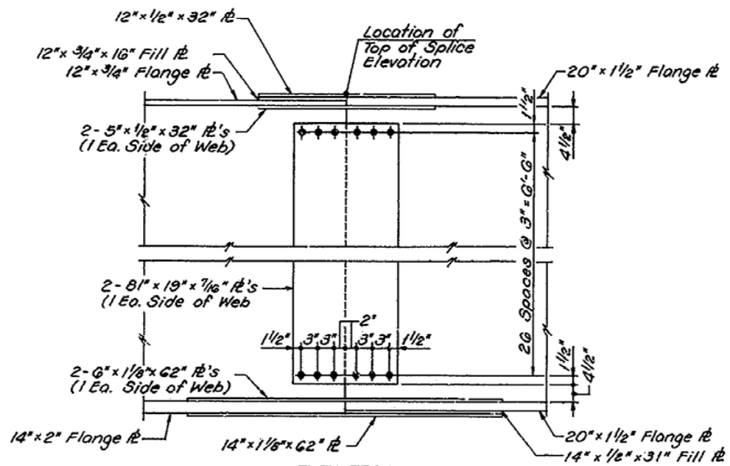

ELEVATION

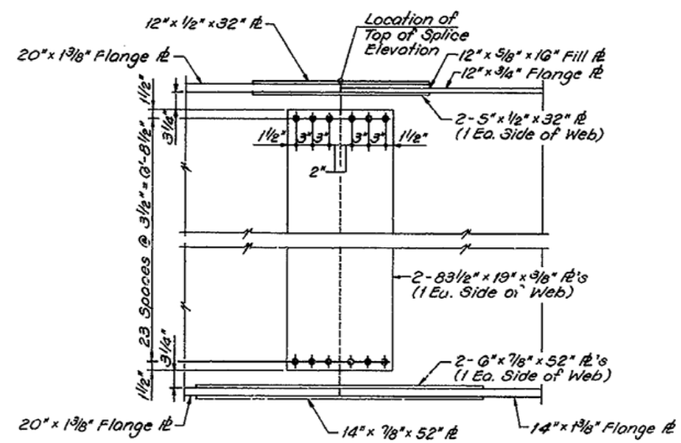

ELEVATION

NOTE:
All Splice Connections shall be made with ⅞" ϕ High Strength Bolts thru 15/16" ϕ Holes
All splice plates to be A588 steel.

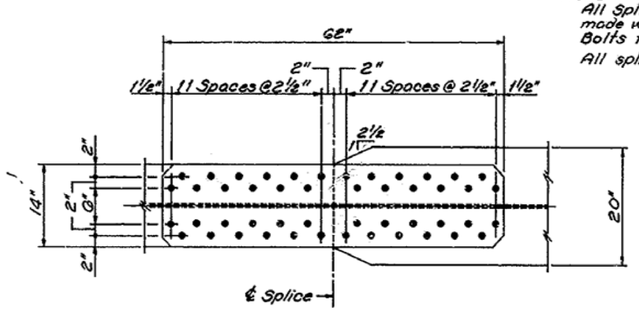

PLAN - BOTTOM FLANGE SPLICE PLATE

SPLICE 1 AND 4 DETAILS

SPLICE 1 SHOWN, SPLICE 4
SYMMETRICAL BY OPPOSITE HAND

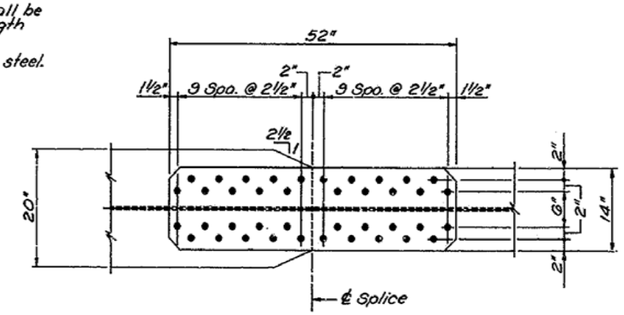

PLAN - BOTTOM FLANGE SPLICE PLATE

SPLICE 2 AND 3 DETAILS

SPLICE 2 SHOWN, SPLICE 3
SYMMETRICAL BY OPPOSITE HAND

TOP OF SPLICE ELEVATIONS

SPLICE NO.	GIRDER 1	GIRDER 2	GIRDER 3	GIRDER 4
1	525.716	525.439	525.239	525.039
2	532.752	532.386	532.186	531.986
3	532.752	532.386	532.186	531.986
4	523.716	525.439	525.239	525.039

NOTE:
ELEVATIONS TAKEN @ CL GIRDER & CL SPLICE
VALUES ARE FOR ALL STRUCTURAL STEEL ERECTED IN PLACE

STRUCTURAL STEEL

Capital Plaza-West Frankfort Connector
(Mero Street) Over The Kentucky River SHEET 33

COMMONWEALTH OF KENTUCKY
DEPARTMENT OF HIGHWAYS
FRANKFORT
COUNTY OF
FRANKLIN
CAPITAL PLAZA WEST FRANKFORT CONNECTOR
ROAD
STATION 153+50.00 P. E. PROJECT NO.

CONSTRUCTION PROJECT NO.	MAINTENANCE PROJECT NO.	DRAWING NO.
		21450

UPDATE DATE
LETTING DATE

DESIGNED BY DCD	CHECKED BY RHC	DATE 4-26	REVISED
DETAILED BY ALF	CHECKED BY RHC	DATE 4-26	REVISED
TRACED BY	CHECKED BY	DATE	REVISED

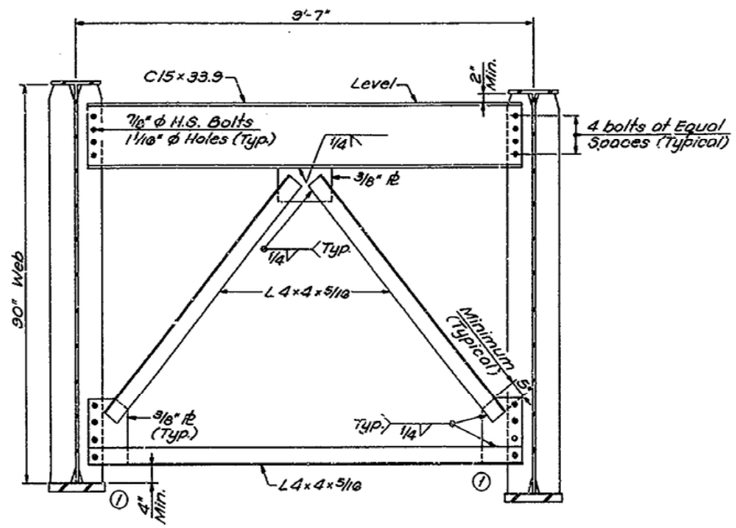

ABUTMENT CROSS FRAME

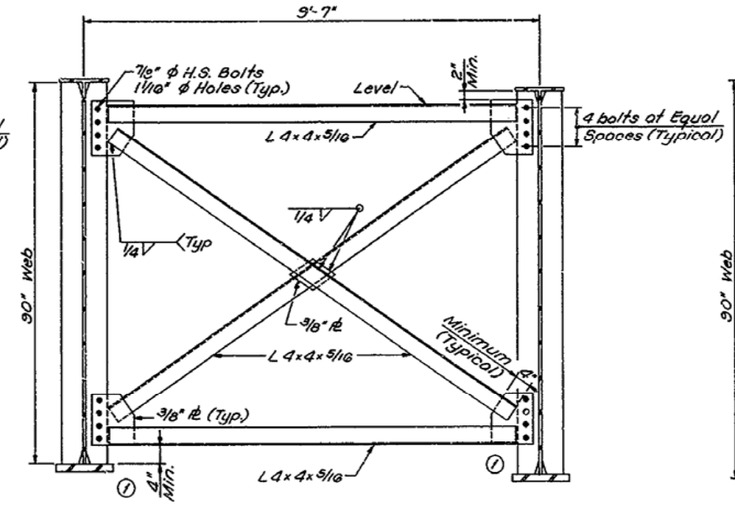

INTERMEDIATE CROSS FRAME

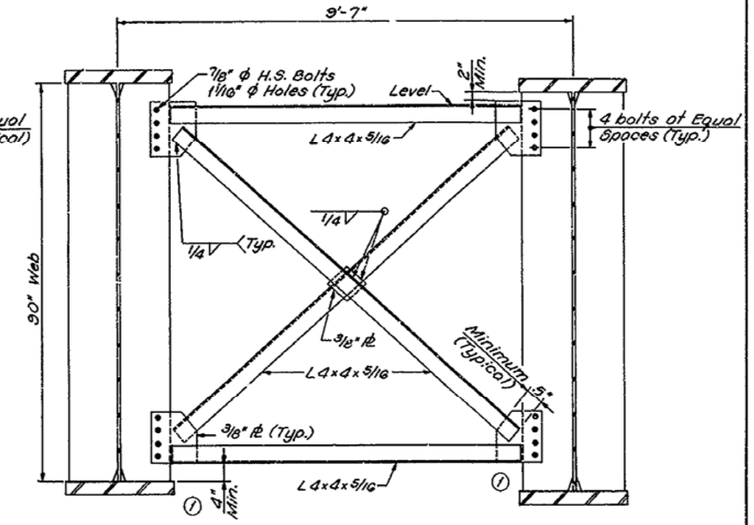

PIER CROSS FRAME

① For Lateral Bracing connection details, see Sheet #31.

NOTE:
All abutment, intermediate and pier cross frame members including connection plates, angles and channels shall be A36 steel.

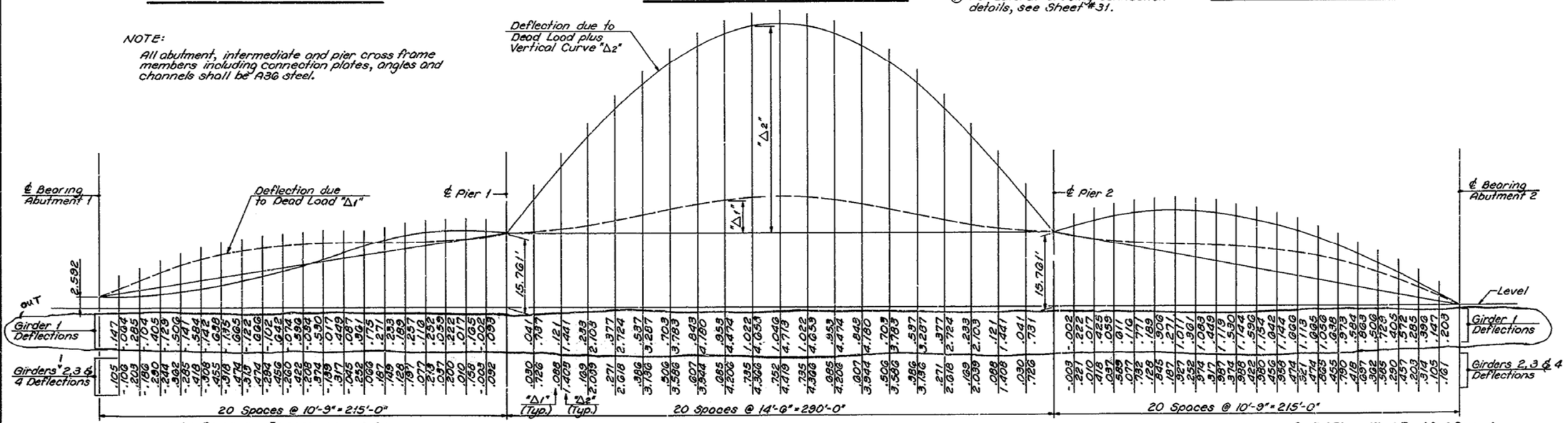

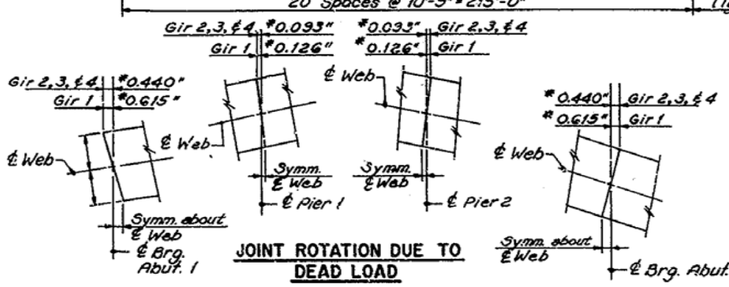

JOINT ROTATION DUE TO DEAD LOAD

DEAD LOAD DEFLECTION DIAGRAM

Δ1 = Deflection due to Steel and Concrete Dead Load

Δ2 = Deflection due to Dead Load plus the Vertical Curve

NOTE: Deflection values are in feet.

* Web displacement due to dead load joint rotation only. For the Bearing Stiffeners to be Vertical under dead load additional correction must be made.

STRUCTURAL STEEL

Capital Plaza-West Frankfort Connector (Mero Street) Over The Kentucky River SHEET 34

COMMONWEALTH OF KENTUCKY
DEPARTMENT OF HIGHWAYS
FRANKFORT
COUNTY OF
FRANKLIN
CAPITAL PLAZA WEST FRANKFORT CONNECTOR ROAD
STATION 153+50.00 P.E. PROJECT NO.

CONSTRUCTION PROJECT NO.	MAINTENANCE PROJECT NO.	DRAWING NO.
		21450

UPDATE DATE
LETTING DATE

DESIGNED BY DCO	CHECKED BY AHC	DATE 5-86	REVISED
DETAILED BY ALF	CHECKED BY AHC	DATE 4-86	REVISED
TRACED BY	CHECKED BY	DATE	REVISED

Delete Girder 1 Deflections - Use 2mm Deflections for Girder 1 as Girders 2,3,&4. - 2-8-88

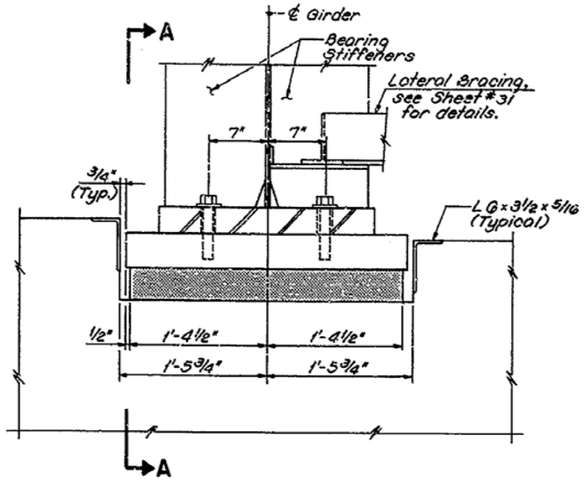

PIER BEARING ELEVATION

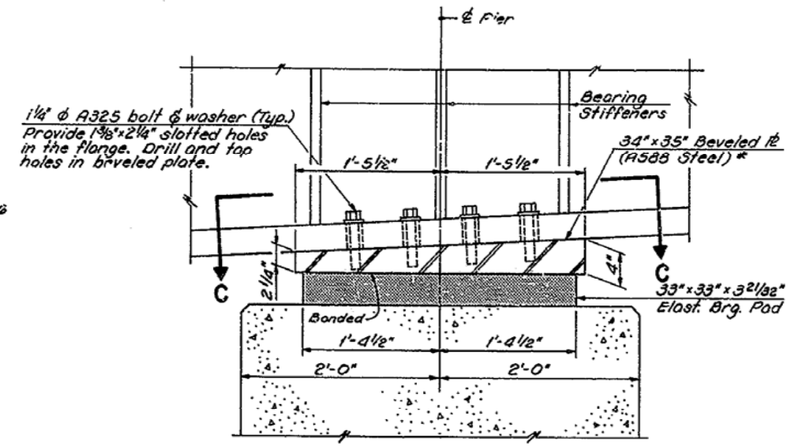

SECTION A-A

* NOTE: Beveled Plate shall be vulcanized to elastomeric pad. Cost of beveled plate shall be included in the unit price bid for Elastomeric Bearings.

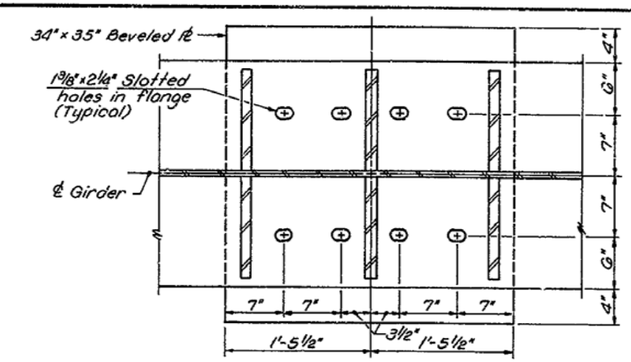

SECTION C-C

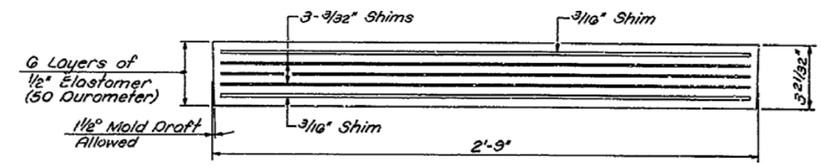

PIER BEARING PAD (8 Required)

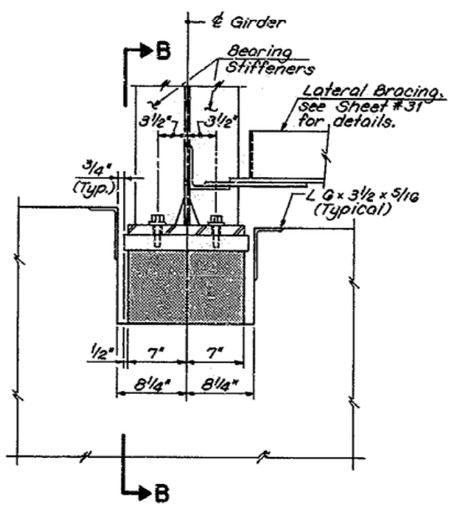

ABUTMENT BEARING ELEVATION

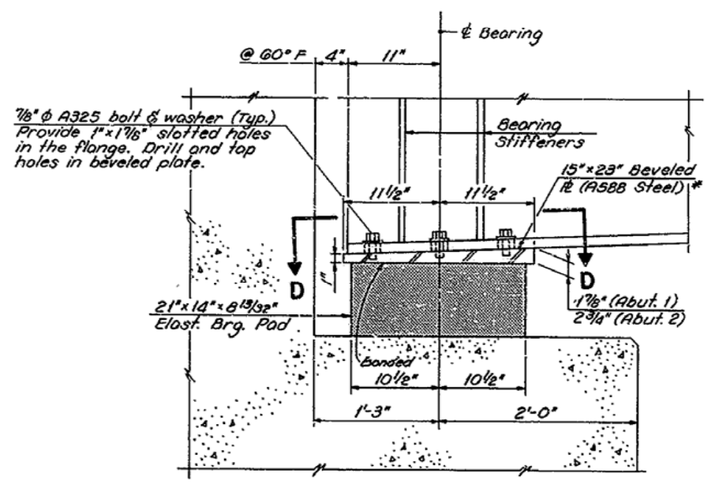

SECTION B-B

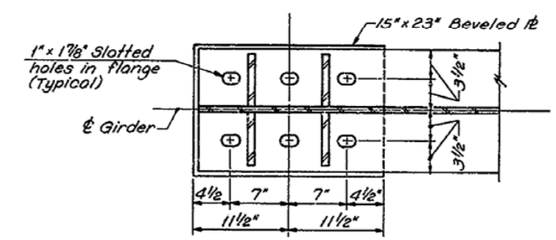

SECTION D-D

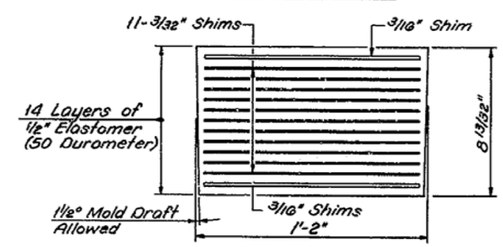

ABUTMENT BEARING PAD (8 Required)

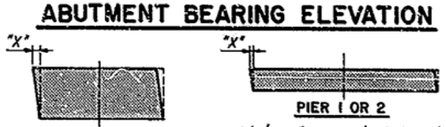

LOCATION	"X"
ABUT. 1 OR 2	1/4"
PIER 1 OR 2	1/8"

Note: For each 10°F above (or below) a median temperature of 60°F, the bearing shall be displaced by an amount "X" as tabulated. The displacements should be toward the bridge ends for temperatures above 60°F. For temperatures below 60°F the displacements should be toward the center of the bridge. See also the Special Note "Placement of Girders on Elastomeric Bearings".

CORRECTIONS FOR TEMPERATURE AT ELASTOMERIC BEARING

STRUCTURAL STEEL

Capital Plaza - West Frankfort Connector
(Mero Street) Over The Kentucky River SHEET 35

COMMONWEALTH OF KENTUCKY
DEPARTMENT OF HIGHWAYS
FRANKFORT
COUNTY OF
FRANKLIN
CAPITAL PLAZA WEST FRANKFORT CONNECTOR ROAD
STATION 153+50.00 P. E. PROJECT NO.

CONSTRUCTION PROJECT NO.	MAINTENANCE PROJECT NO.	DRAWING NO.
		21450

UPDATE DATE
LETTING DATE

DESIGNED BY DCD	CHECKED BY RHC	DATE 4-86	REVISED
DETAILED BY ALF	CHECKED BY RHC	DATE 4-86	REVISED
TRACED BY	CHECKED BY	DATE	REVISED

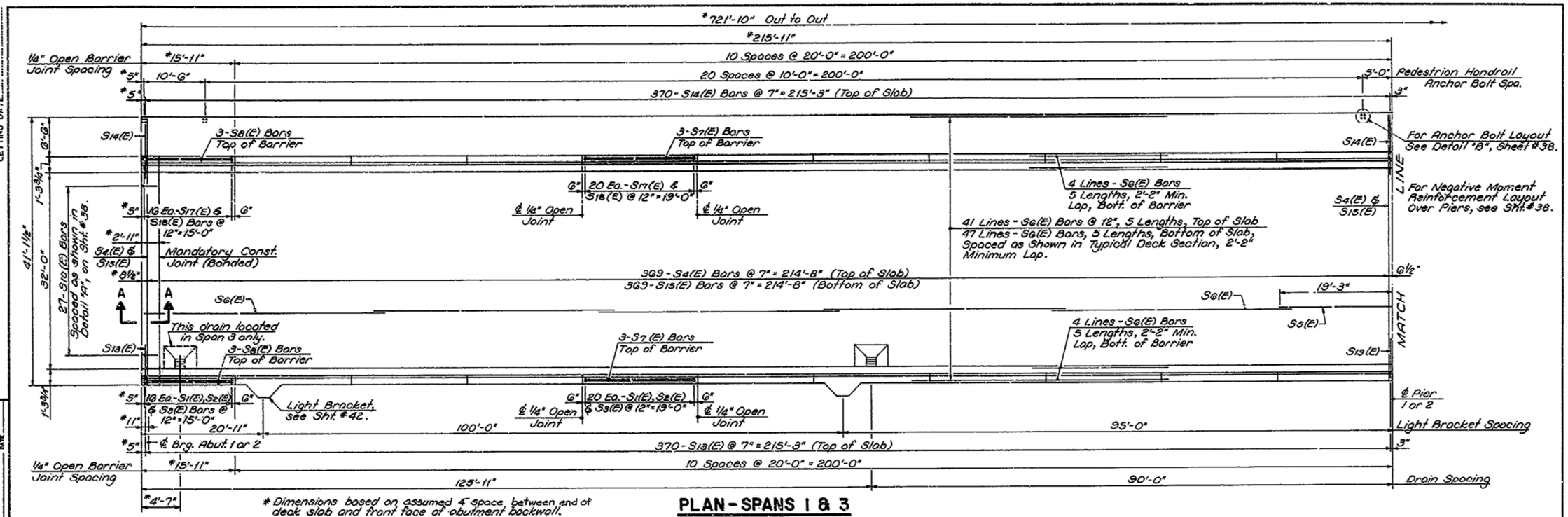

* Dimensions based on assumed 4" space between end of deck slab and front face of abutment backwall. Actual dimension depends on type of Expansion Dam used, see Sheet #41.

PLAN - SPANS 1 & 3

SPAN 1 SHOWN, SPAN 3 OPPOSITE HAND

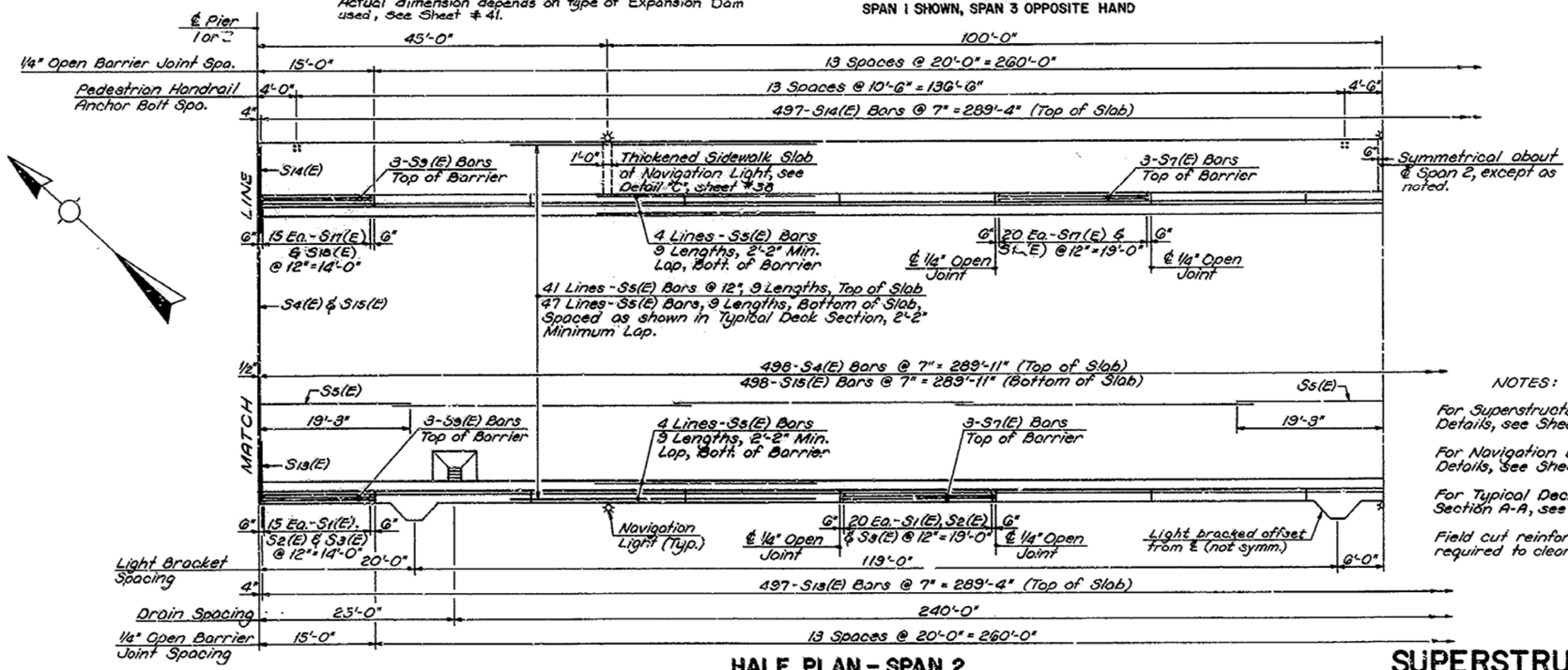

HALF PLAN - SPAN 2

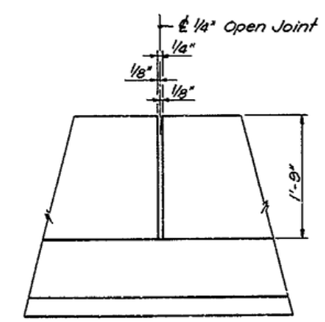

BARRIER JOINT DETAIL

NOTES:

For Superstructure Lighting Details, see Sheet #42.

For Navigation Lighting Details, See Sheet #43

For Typical Deck Section & Section A-A, see Sheet #37

Field cut reinforcement as required to clear deck drains.

SUPERSTRUCTURE

Capital Plaza - West Frankfort Connector
(Mero Street) Over The Kentucky River SHEET 36

COMMONWEALTH OF KENTUCKY
DEPARTMENT OF HIGHWAYS
FRANKFORT
COUNTY OF FRANKLIN
CAPITAL PLAZA WEST FRANKFORT CONNECTOR ROAD

STATION 153+50.00 P. E. PROJECT NO.

CONSTRUCTION PROJECT NO. | MAINTENANCE PROJECT NO. | DRAWING NO. 21450

UPDATE DATE
LETTING DATE

DESIGNED BY WBC CHECKED BY DCD DATE 4-86 REVISED
DETAILED BY RLF CHECKED BY RHC DATE 4-86 REVISED
TRACED BY CHECKED BY DATE REVISED

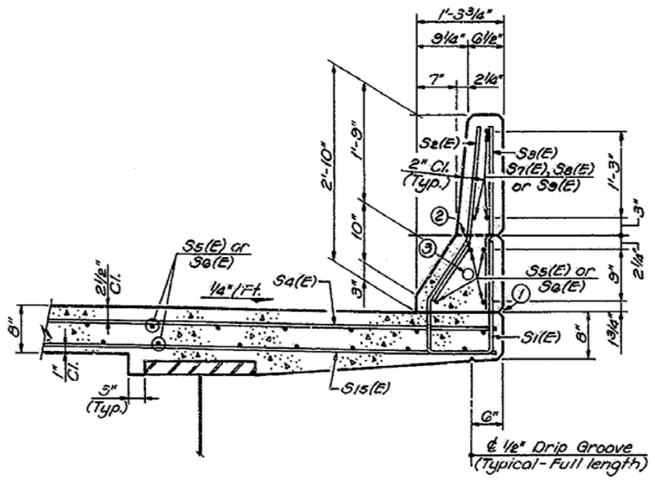

TYPICAL SECTION THRU SOUTH BARRIER

① Mandatory Construction Joint and Rustication Groove

② Optional Construction Joint and Rustication Groove, Limit of ¼" Open Barrier Joint (See Detail, Sheet #36).

③ Galvanized Steel Conduit, (See Typical Deck Section below).

④ Holes in ℞ to match Cast Alum. Post Base. Area between ℞ and concrete to be filled with an aluminastic compound. See Detail "B", sheet #

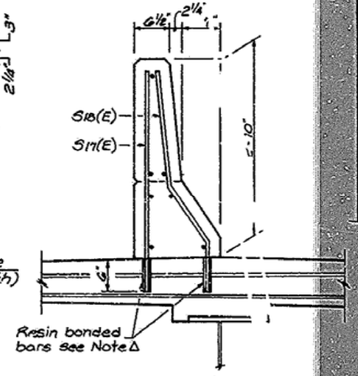

TYPICAL SECTION THRU NORTH BARRIER

(Similar to South Barrier Except as Shown)

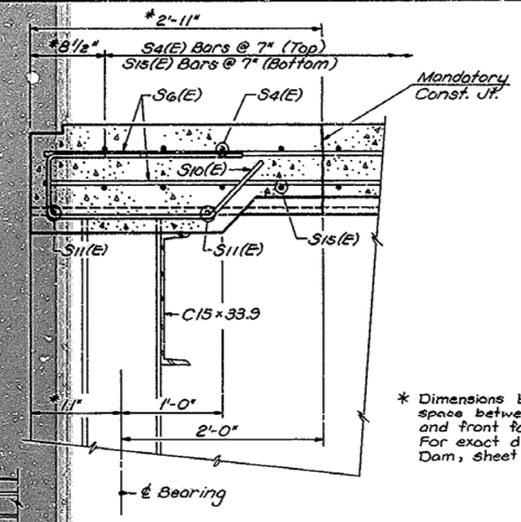

* Dimensions based on assumed 4" space between end of deck slab and front face of abutment backwall. For exact dimensions see Expansion Dam, sheet # 41.

SECTION A-A

Δ Note

The deck and sidewalk shall be placed and screeded as a unit. When the concrete has attained a compressive strength of 3,000 psi or more, six (6) inch deep holes are to be drilled and S11(E) & S18(E) bars are to be grouted in place with a resin system - See special notes "Resin Bonded Reinforcing Bars" Cost of drilling, resin, and installation of bars is incidental to Class "AA" Concrete.

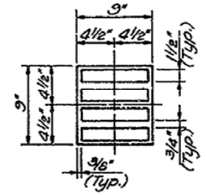

DECK DRAIN

Neenah R4006 or equivalent

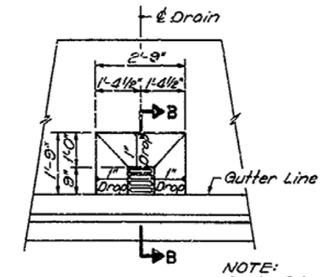

TYPICAL PLAN

NOTE: Drain Ribs are to be parallel to Gutter Line.

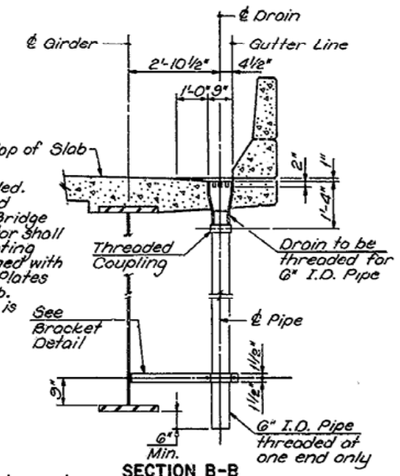

SECTION B-B

NOTE: Drains shall be as detailed. Other drains may be used with permission of the Bridge Engineer. The Contractor shall exercise caution in locating Drains so they are aligned with the Drain Pipe Bracket Plates bolted to the Girder Web. Estimated Drain weight is 60 lbs.

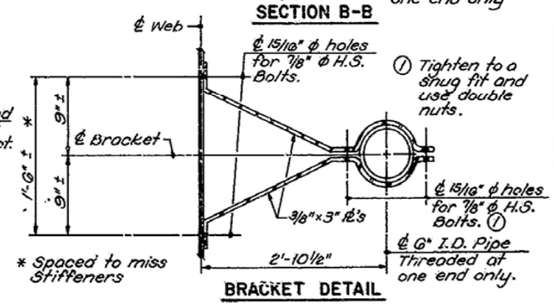

* Spaced to miss Stiffeners

BRACKET DETAIL

DRAIN DETAILS

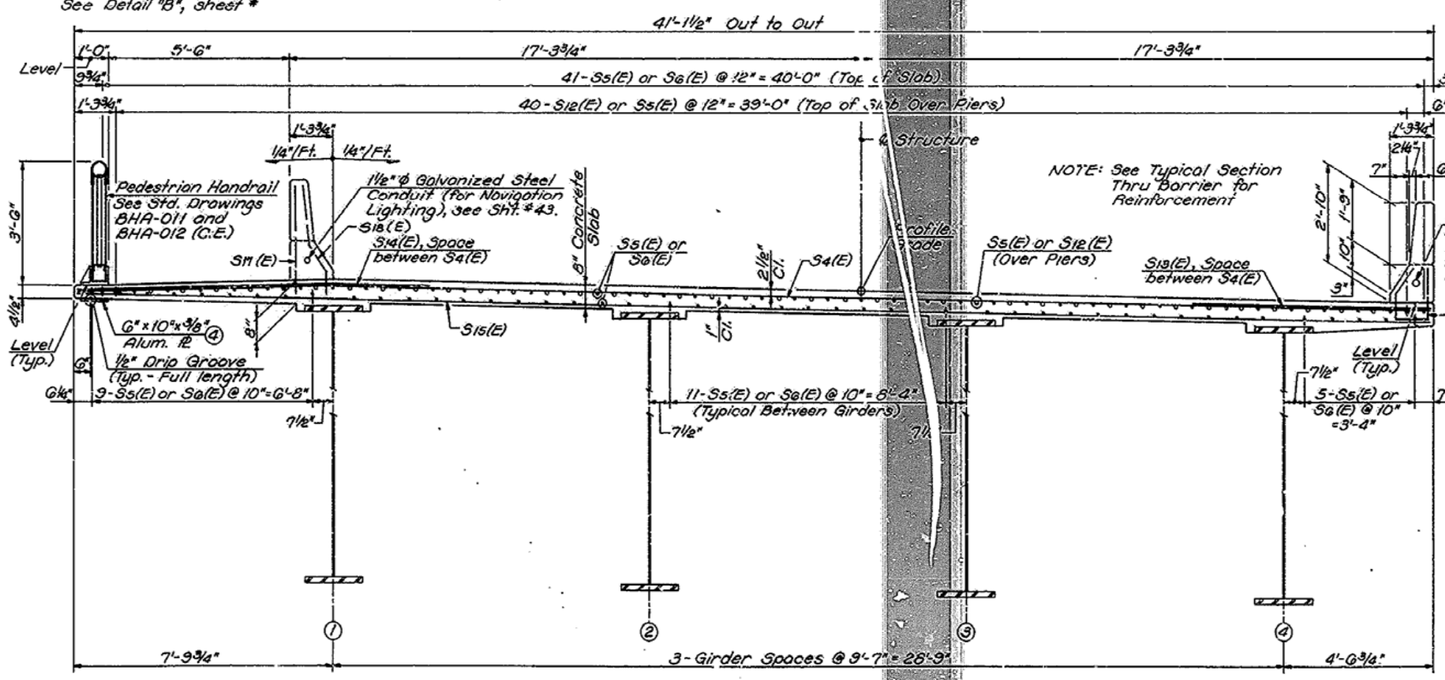

TYPICAL DECK SECTION

(LOOKING AHEAD STATION)

SUPERSTRUCTURE

Capital Plaza - West Frankfort Connector (Mero Street) Over The Kentucky River SHEET 37

COMMONWEALTH OF KENTUCKY
DEPARTMENT OF HIGHWAYS
FRANKFORT
COUNTY OF
FRANKLIN
CAPITAL PLAZA WEST FRANKFORT CONNECTOR
ROAD

STATION 153+ .00 P. E. PROJECT NO.

CONSTRUCTION PROJECT NO.	MAINTENANCE PROJECT NO.	DRAWING NO.
		21450

LUPDATE DATE
LETTING DATE

DESIGNED BY WBG	CHECKED BY DCD	DATE 5-1-86	REVISED
DETAILED BY ALP	CHECKED BY RHC	DATE 5-1-86	REVISED
TRACED BY	CHECKED BY	DATE	REVISED

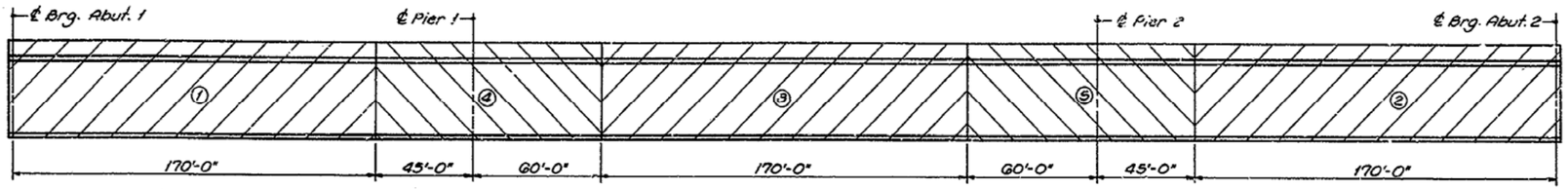

The Contractor shall pour the deck slab in the order shown above to avoid extremely large pours. The concrete placement may start at either end of bridge. The number of sections placed in a days time shall be controlled by the volume of concrete that can be placed and satisfactorily finished by the Contractor.

DECK SLAB POURING SEQUENCE

All reinforcing bars designated by suffix (E) in the plans shall be epoxy coated in accordance with the Specifications.

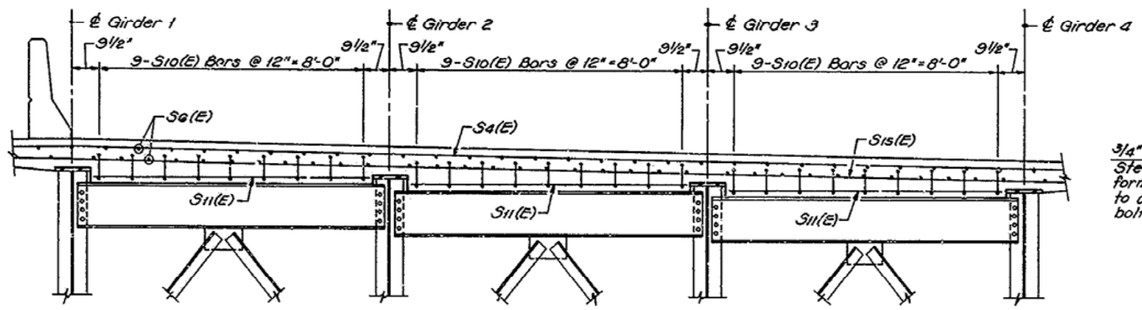

DETAIL "A"

(Showing Reinforcement at End of Slab, see Section A-A on Sheet #37).

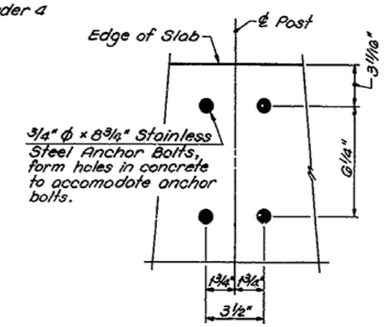

DETAIL "B"

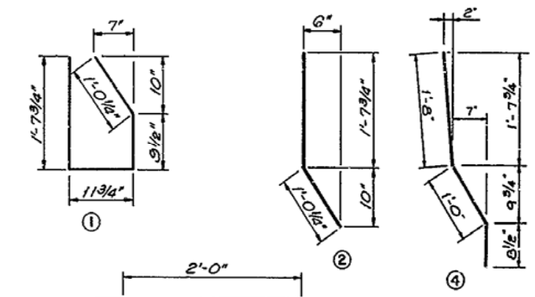

BILL OF REINFORCEMENT

MARK	TYPE	SIZE	NO.	LENGTH Ft.	LENGTH In.	LOCATION	a Ft.	a In.	b Ft.	b In.	c Ft.	c In.	d Ft.	d In.
S1(E)	①	#5	722	4	4	Slab/Sc.Barr.								
S2(E)	②	#5	722	2	8	So. Barrier								
S3(E)	Str.	#5	722	2	8	So. Barrier								
S4(E)	Str.	#6	1236	40	10	Top Slab								
S5(E)	Str.	#5	1024	38	6	Slab/Barrier								
S6(E)	Str.	#5	960	41	7	Slab/Barrier								
S7(E)	Str.	#5	722	3	2	Slab/No. Barr.								
S8(E)	④	#5	722	3	4	Slab/No. Barr.								
S7(E)	Str.	#5	188	19	8	Barrier								
S8(E)	Str.	#5	12	15	7	Barrier								
S9(E)	Str.	#5	12	14	8	Barrier								
S10(E)	③	#4	54	5	0	End of Slab								
S11(E)	Str.	#4	12	8	4	End of Slab								
S12(E)	Str.	#6	80	55	4	T. Slab @ Piers								
S13(E)	Str.	#4	1237	7	6	Top Slab								
S14(E)	Str.	#4	1237	10	9	Top Slab								
S15(E)	Str.	#5	1236	40	10	Bott. Slab								
S16(E)	Str.	#6	6	6	7	Sidewalk								

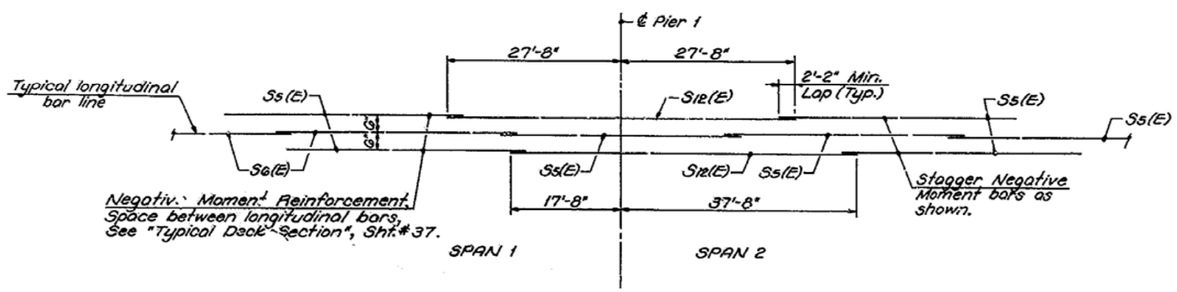

NEGATIVE MOMENT REINFORCEMENT LAYOUT

(At Pier 1 Shown, Pier 2 Opposite Hand)

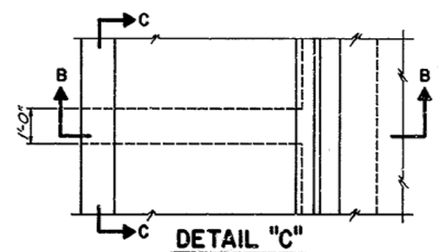

DETAIL "C"

THICKENED SIDEWALK SLAB AT NAVIGATION LIGHT

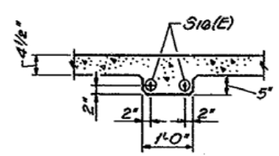

SECTION C-C

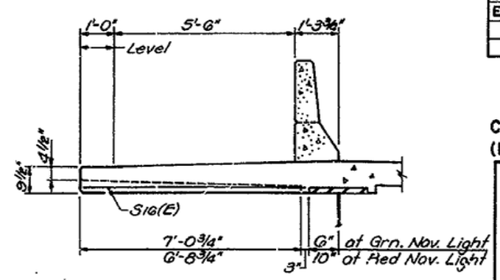

SECTION B-B

ESTIMATE OF QUANTITIES

ITEM	UNIT	QUANTITY
CLASS "AA" CONCRETE	CU. YD.	885.9
EPOXY COATED STEEL REINFORCING	LBS.	249,852

Capital Plaza - West Frankfort Connector
(Mero Street) Over The Kentucky River SHEET 38

COMMONWEALTH OF KENTUCKY
DEPARTMENT OF HIGHWAYS
FRANKFORT
COUNTY OF
FRANKLIN
CAPITAL PLAZA WEST FRANKFORT CONNECTOR
ROAD

STATION 153+50.00 P. E. PROJECT NO.

CONSTRUCTION PROJECT NO. | MAINTENANCE PROJECT NO. | DRAWING NO. 21450

SUPERSTRUCTURE

UPDATE DATE
LETTING DATE

DATE DATE DATE

REVISED REVISED REVISED

DESIGNED BY WAC CHECKED BY RHC DATE 4-86
DETAILED BY ALP CHECKED BY RHC DATE 4-86
TRACED BY CHECKED BY DATE

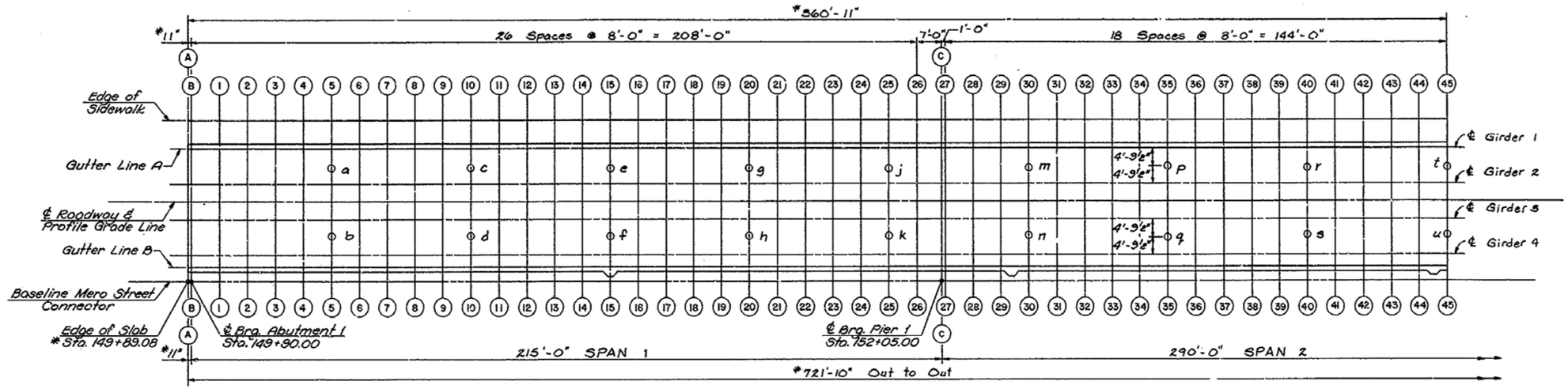

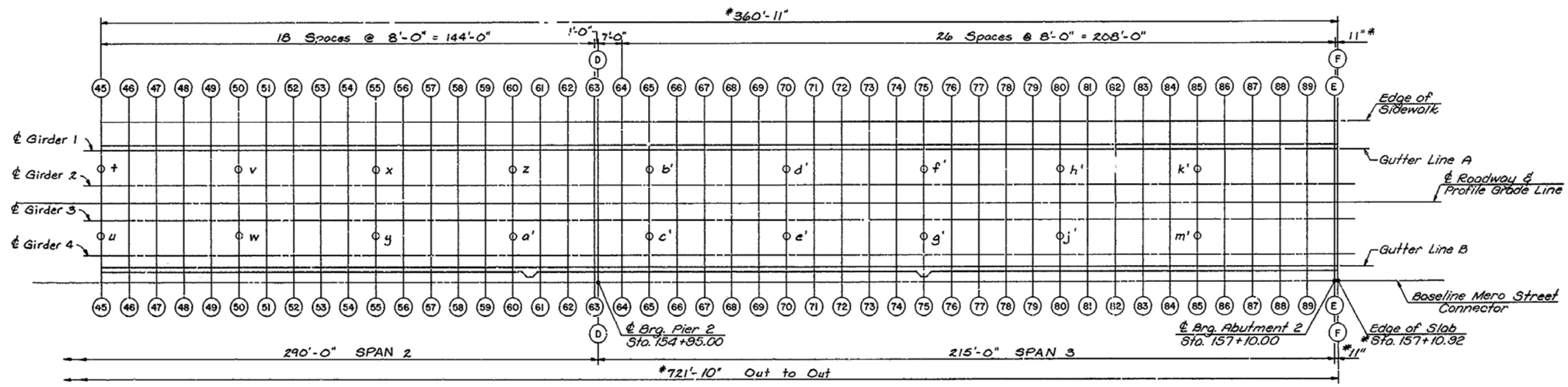

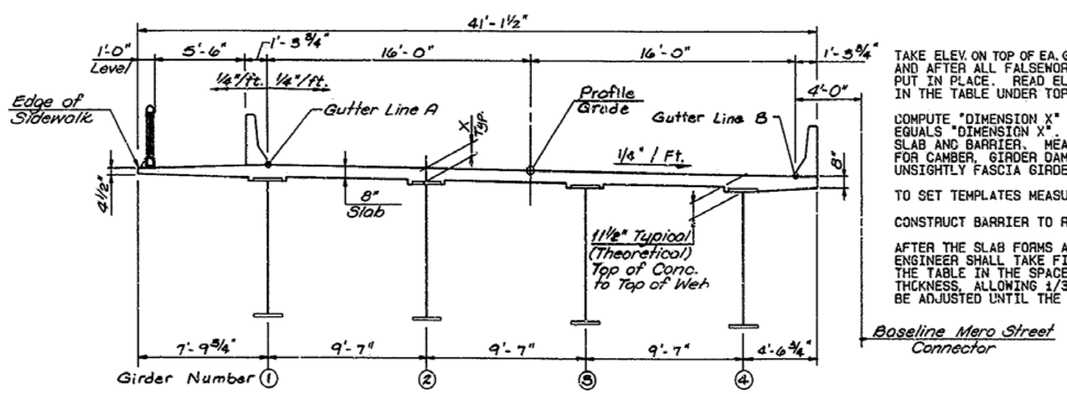

NOTES:

TAKE ELEV. ON TOP OF EA. GIRDER AT POINTS INDICATED AFTER THE CROSS FRAMES & LATERAL BRACING ARE IN PLACE AND AFTER ALL FALSEWORK HAS BEEN REMOVED, BUT BEFORE FORMS FOR CONCRETE SLABS HAVE BEEN PUT IN PLACE. READ ELEVATIONS TO THREE (3) DECIMALS USING A TARGET ROD AND ENTER READINGS IN THE TABLE UNDER TOP OF GIRDER ELEVATIONS.

COMPUTE "DIMENSION X" AS FOLLOWS: "CONSTRUCTION ELEVATION" MINUS "TOP OF GIRDER ELEVATION" EQUALS "DIMENSION X". "CONSTRUCTION ELEVATION" INCLUDES CAMBER DUE TO WEIGHT OF CONCRETE SLAB AND BARRIER. MEASURING OF "DIMENSION X" GIVES THE FINAL CHECK ON GIRDER TOLERANCES FOR CAMBER, GIRDER DAMAGE, AND ERRORS IN ERECTION THAT PRODUCE REVERSE CAMBERS, SAGS AND UNSIGHTLY FASCIA GIRDERS.

TO SET TEMPLATES MEASURE "DIMENSION X" ABOVE TOP OF GIRD. DO NOT SET TEMPLATES BY ELEVATIONS.

CONSTRUCT BARRIER TO ROADWAY GRADE. DO NOT ADD CAMBER TO BARRIER.

AFTER THE SLAB FORMS ARE ERECTED AND BEFORE THE SLAB REINFORCEMENT IS PLACED, THE RESIDENT ENGINEER SHALL TAKE FIELD ELEVATIONS AT THE SLAB THICKNESS CHECK POINTS AND ENTER THEM IN THE TABLE IN THE SPACE PROVIDED. IF THE SLAB THICKNESS VARIES MORE THAN 1/4" FROM THE PLAN THCKNESS, ALLOWING 1/360 OF THE SLAB SPAN FOR DEFLECTION OF THE FORM WORK, THE FORM SHALL BE ADJUSTED UNTIL THE COMPUTED SLAB THICKNESS IS WITHIN THE TOLERANCE ALLOWED.

*Dimensions are based on a 4" space between the end of the deck slab and the front face of the abutment backwall; for exact dimensions, see Expansion Dam, sheet #41.

Capital Plaza - West Frankfort Connector
(Mero Street) Over The Kentucky River SHEET 39

CONSTRUCTION ELEVATIONS

COMMONWEALTH OF KENTUCKY
DEPARTMENT OF HIGHWAYS
FRANKFORT
COUNTY OF
FRANKLIN
CAPITAL PLAZA-WEST FRANKFORT CONNECTOR
ROAD

STATION 153+50.00 P. E. PROJECT NO.

CONSTRUCTION PROJECT NO.	MAINTENANCE PROJECT NO.	DRAWING NO.
		21450

UPDATE DATE
LETTING DATE

DESIGNED BY RJD	CHECKED BY RHC	DATE 3/16	REVISED
DETAILED BY ALF & SWF	CHECKED BY RHC	DATE 5/66	REVISED
TRACED BY	CHECKED BY	DATE	REVISED

UPDATE DATE
LETTING DATE

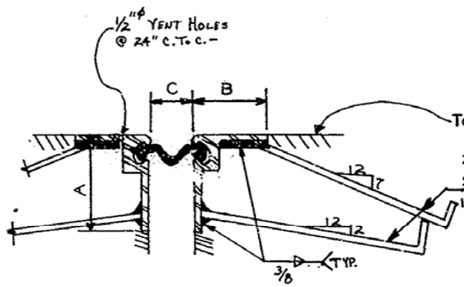

Shop Splice is Permissable in Steel using Continuous Groove Welds

~ CROSS SECTION - TYPE "A" ~

(Abut. 2)

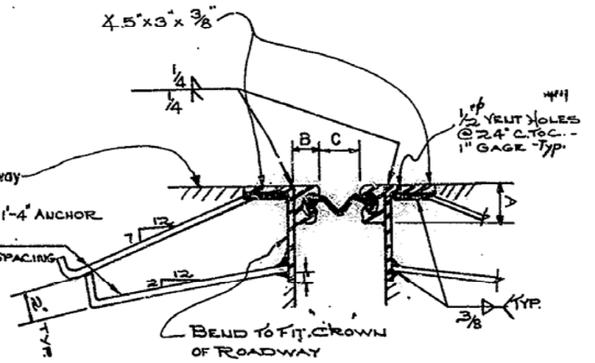

Shop Splice is Permissable in Steel using Continuous Groove Welds.

~ CROSS SECTION - TYPE "B" ~

(Abut. 2)

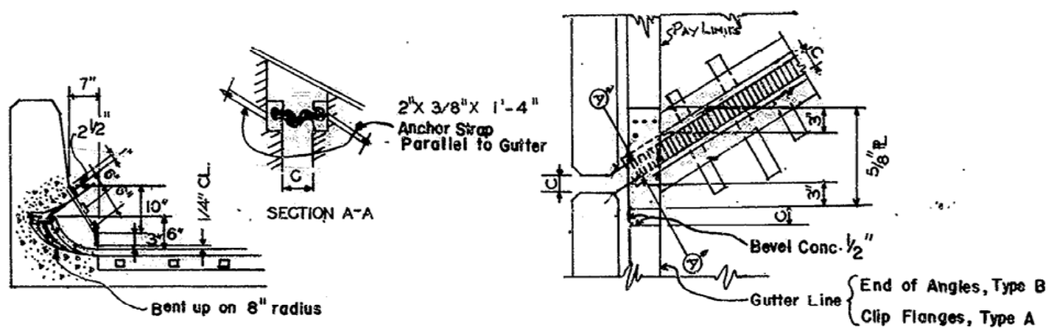

~ TYPICAL END TREATMENT - SKEWED BRIDGE ~

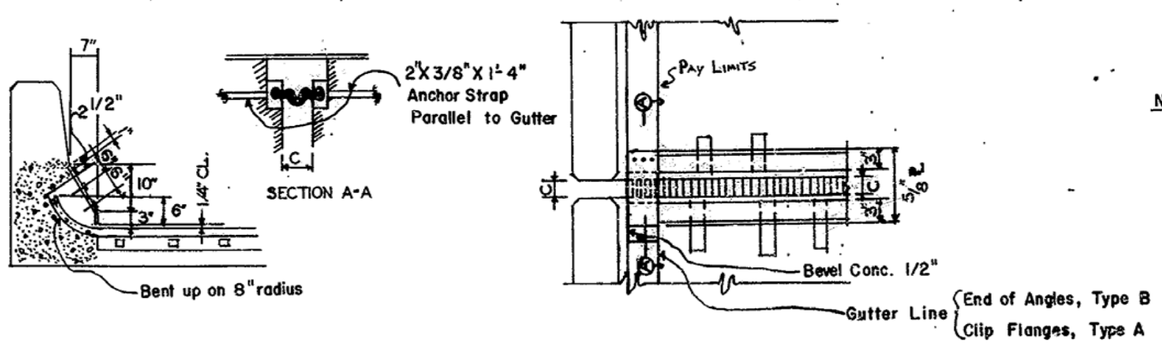

~ TYPICAL END TREATMENT - 0° SKEWED BRIDGE ~

~ ALTERNATE NEOPRENE EXPANSION DAMS ~

TYPE	MODEL	SUPPLIER		A	B	C *
A	WABO STRIP SEAL Type C extrusion with S-400 seal	Watson Bowman Associates Inc.		4 1/4"	3 3/4"	2"
B	WABO STRIP SEAL Type A extrusions with S-400 seal	Watson Bowman Associates Inc.		2"	1 1/2"	2"
B	STEELFLEX Type RS3 with 400 seal	D.S. Brown Co.		3"	1 1/4"	2 1/2"
B	GEN STRIP CD Profile A steel extrusion with Gen Strip CD seal	General Tire Co.		2"	1 3/8"	2 1/4"

GENERAL NOTES

* Joint Opening at 60 F

Specifications: The Kentucky Dept. of Highway Standard Specifications for Road and Bridge Construction, current edition with Revisions and Special Provision No 35 C.E.

Welding Specification: All Welding Materials, Welding Techiques and Welding Procedure shall Comply with American Welding Society D11-80 Structural Welding Code with Revisions.

Mill Test Reports: Notarized Statements in Triplicate shall be furnished to the Dept. of Highways showing that all Structural Steel Conform to the Specifications.

Basis of Payment: The accepted quantities of Expansion Dam will be paid for at the contract unit price per Lin. Ft. for each size, measured along the centerline of joint. This payment shall be full compensation for all materials (including armored edges, anchor straps, anchor bolts, curb plates, welding and welding materials and installing hardware.) and installation. Payment will be made under:

Pay Item	Pay Unit
Expansion Dam 4" Neoprene	Linear Foot

Material Specifications: Steel material shall conform to A.S.T.M. designation A-36. Joint Sealing Material shall be in accordance with Special Provision No. 35 C.E.

Location: The location of Expansion Dams shall be as shown on the Detail Plans.

Paint: All Structural Steel shall be cleaned and painted in accordance with the Specifications

Pay Limit: The pay limit shall be gutter line to gutter line.

NOTE: JOINT OPENINGS SHALL BE ADJUSTED FOR EACH 10° ABOVE OR BELOW 60°F, DECREASE OR INCREASE RESPECTIVELY BY INCREMENT SHOWN.

Increment for 10° Temp. Change		
~ Steel Span ~		
180'-240'	241'-320'	321'-365'
3/16"	1/4"	5/16"
~ Concrete Span ~		
320'-420'	421'-560'	561'-700'
3/16"	1/4"	5/16"

NEOPRENE EXPANSION DAM (4")

(Clinton Ave.) over THE KY. RIVER — SHEET 39A

COMMONWEALTH OF KENTUCKY
DEPARTMENT OF HIGHWAYS
FRANKFORT
COUNTY OF
FRANKLIN
CAPITAL PLAZA - WEST FRANKFORT CONNECTOR ROAD

STATION 153+75.00 — P. E. PROJECT NO.

Construction Project No. — Maintenance Project No. — Drawing No. 21449

DESIGNED BY — CHECKED BY — DATE — REVISED
DETAILED BY — CHECKED BY — DATE — REVISED
TRACED BY — CHECKED BY — DATE — REVISED

DRAWING 44-132 6/8/27

UPDATE DATE

LETTING DATE

GRID LINE	EDGE OF SIDEWALK CONST. ELEV.	CL GIRDER 1 & GUTTER LINE A TOP OF GIRDER CONST. ELEV.	DIMEN. "X"	CL GIRDER 2 TOP OF GIRDER CONST. ELEV.	DIMEN. "X"	CL GIRDER 3 TOP OF GIRDER CONST. ELEV.	DIMEN. "X"	CENTERLINE STRUCTURE CONST. ELEV.	CL GIRDER 4 TOP OF GIRDER CONST. ELEV.	DIMEN. "X"	GUTTER LINE B CONST. ELEV.	GRID LINE
A*	516.311	517.053						516.720	516.454		516.387	A*
B	516.961	517.103						516.704	516.504		516.437	B
1	517.358	517.500						517.095	516.893		516.828	1
2	517.771	517.913						517.502	517.298		517.230	2
3	518.199	518.340						517.924	517.718		517.650	3
4	518.636	518.778						518.358	518.150		518.083	4
5	519.087	519.228						518.804	518.595		518.527	5
6	519.546	519.690						519.262	519.050		518.983	6
7	520.018	520.160						519.730	519.518		519.450	7
8	520.499	520.641						520.208	519.996		519.928	8
9	520.988	521.130						520.696	520.483		520.416	9
10	521.487	521.629						521.195	520.982		520.914	10
11	521.995	522.137						521.705	521.490		521.423	11
12	522.513	522.655						522.223	522.010		521.943	12
13	523.043	523.185						522.754	522.542		522.474	13
14	523.583	523.725						523.297	523.084		523.017	14
15	524.135	524.277						523.851	523.640		523.572	15
16	524.702	524.844						524.421	524.212		524.144	16
17	525.283	525.425						525.006	524.796		524.730	17
18	525.856	525.998						525.582	525.376		525.308	18
19	526.407	526.549						526.137	525.932		525.865	19
20	526.940	527.082						526.673	526.469		526.401	20
21	527.454	527.596						527.189	526.986		526.918	21
22	527.949	528.091						527.686	527.485		527.417	22
23	528.427	528.569						528.167	527.966		527.898	23
24	528.889	529.031						528.630	528.430		528.362	24
25	529.335	529.477						529.077	528.877		528.809	25
26	529.765	529.907						529.508	529.308		529.241	26
C	530.130	530.272						529.873	529.673		529.605	C
27	530.181	530.323						529.924	529.724		529.657	27
28	530.983	530.725						530.324	530.125		530.057	28
29	530.989	531.111						530.709	530.509		530.442	29
30	531.340	531.482						531.079	530.877		530.809	30
31	531.695	531.837						531.431	531.228		531.160	31
32	532.033	532.175						531.766	531.563		531.495	32
33	532.355	532.497						532.084	531.879		531.812	33
34	532.659	532.801						532.385	532.177		532.110	34
35	532.945	533.087						532.667	532.458		532.390	35
36	533.211	533.353						532.928	532.718		532.650	36
37	533.454	533.596						533.170	532.995		532.867	37
38	533.672	533.814						533.388	533.184		533.100	38
39	533.865	534.007						533.581	533.354		533.286	39
40	534.030	534.172						533.746	533.513		533.446	40
41	534.166	534.308						533.882	533.646		533.578	41
42	534.273	534.415						533.989	533.749		533.682	42
43	534.350	534.492						534.045	533.823		533.756	43
44	534.396	534.538						534.090	533.868		533.801	44
45	534.411	534.553						534.105	533.884		533.816	45
46	534.396	534.538						534.090	533.868		533.801	46
47	534.350	534.492						534.045	533.823		533.756	47
48	534.273	534.415						533.970	533.749		533.682	48
49	534.166	534.308						533.865	533.646		533.578	49
50	534.030	534.172						533.732	533.513		533.446	50
51	533.865	534.007						533.570	533.354		533.286	51
52	533.672	533.814						533.382	533.168		533.100	52
53	533.454	533.596						533.167	532.950		532.887	53
54	533.211	533.353						532.928	532.718		532.650	54
55	532.945	533.087						532.667	532.458		532.390	55
56	532.659	532.801						532.385	532.177		532.110	56
57	532.355	532.497						532.084	531.879		531.812	57
58	532.033	532.175						531.766	531.563		531.495	58
59	531.695	531.837						531.431	531.228		531.160	59
60	531.340	531.482						531.079	530.877		530.809	60
61	530.989	531.111						530.709	530.509		530.442	61
62	530.583	530.725						530.324	530.125		530.057	62
63	530.181	530.323						529.924	529.724		529.657	63
D	530.130	530.272						529.873	529.673		529.605	D
64	529.765	529.907						529.508	529.308		529.241	64
65	529.335	529.477						529.077	528.877		528.809	65
66	528.880	529.031						528.630	528.430		528.362	66
67	528.427	528.569						528.167	527.966		527.898	67
68	527.949	528.091						527.686	527.485		527.417	68
69	527.454	527.596						527.189	526.986		526.918	69
70	526.940	527.082						526.673	526.469		526.401	70
71	526.407	526.549						526.137	525.932		525.865	71
72	525.856	525.998						525.582	525.376		525.308	72
73	525.283	525.425						525.006	524.798		524.730	73
74	524.696	524.838						524.414	524.205		524.137	74
75	524.104	524.246						523.885	523.609		523.541	75
76	523.508	523.650						523.222	523.010		522.942	76
77	522.907	523.049						522.684	522.405		522.338	77
78	522.299	522.440						522.073	521.794		521.727	78
79	521.681	521.823						521.457	521.177		521.109	79
80	521.057	521.199						520.833	520.552		520.484	80
81	520.424	520.566						520.195	519.919		519.852	81
82	519.782	519.924						519.556	519.279		519.211	82
83	519.131	519.273						518.905	518.630		518.563	83
84	518.471	518.613						518.382	517.974		517.906	84
85	517.803	517.945						517.587	517.311		517.243	85
86	517.127	517.269						516.915	516.642		516.574	86
87	516.443	516.587						516.237	515.965		515.898	87
88	515.757	515.898						515.554	515.284		515.216	88
89	515.064	515.206						514.867	514.596		514.532	89
E	514.369	514.511						514.178	513.912		513.844	E
F*	514.271	514.413						514.080	513.814		513.746	F*

* THESE GRID LINES ARE NOT LOCATED AT THE END OF SLAB BUT ARE 11" OFF THE CL BEARING. THE END OF SLAB DEPENDS ON THE TYPE OF EXPANSION DAM CHOSEN.

CONSTRUCTION ELEVATIONS

TABLE OF ELEVATIONS FOR CONTROL OF SLAB THICKNESS

POINT	TOP OF SLAB ELEV.	BOTTOM OF SLAB ELEV.	COMPUTED SLAB THICKNESS
a	519.122		
b	518.700		
c	521.520		
d	521.085		
e	524.171		
f	523.746		
g	526.980		
h	526.571		
j	529.377		
k	528.977		
m	531.381		
n	530.978		

POINT	TOP OF SLAB ELEV.	BOTTOM OF SLAB ELEV.	COMPUTED SLAB THICKNESS
p	532.981		
q	532.563		
r	534.062		
s	533.623		
t	534.441		
u	533.995		
v	534.062		
w	533.623		
x	532.982		
y	532.563		
z	531.381		

POINT	TOP OF SLAB ELEV.	BOTTOM OF SLAB ELEV.	COMPUTED SLAB THICKNESS
a'	530.978		
b'	529.377		
c'	528.977		
d'	526.980		
e'	526.571		
f'	524.139		
g'	523.715		
h'	521.090		
j'	520.660		
k'	517.839		
m'	517.416		

Capital Plaza - West Frankfort Connector
(Mero Street) Over The Kentucky River SHEET 40

COMMONWEALTH OF KENTUCKY
DEPARTMENT OF HIGHWAYS
FRANKFORT
COUNTY OF
FRANKLIN
CAPITAL PLAZA-WEST FRANKFORT CONNECTOR ROAD

STATION 153 + 50.00 P.E. PROJECT NO.

CONSTRUCTION PROJECT NO. | MAINTENANCE PROJECT NO. | DRAWING NO. 21450

DESIGNED BY DCO CHECKED BY GLAC DATE 10/1/87 REVISED
DETAILED BY TLL CHECKED BY DCO DATE 10/1/87 REVISED
TRACED BY CHECKED BY DATE REVISED

DATE 10-29-87 DATE DATE DATE

This Sheet Revised

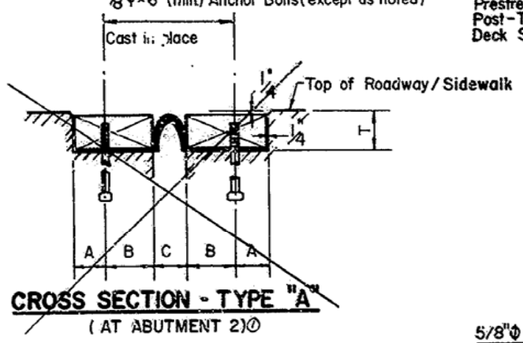

CROSS SECTION - TYPE "A"
(AT ABUTMENT 2)①

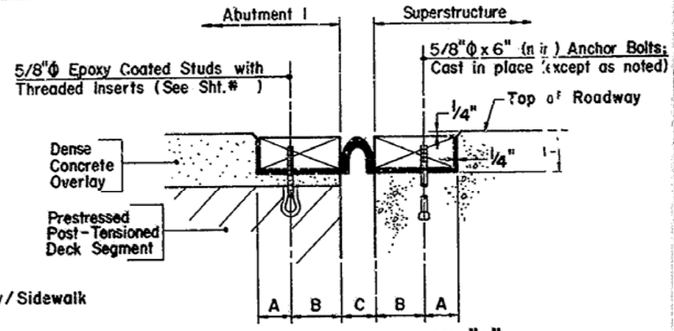

CROSS SECTION - TYPE "A"
(AT ABUTMENT - ROADWAY)

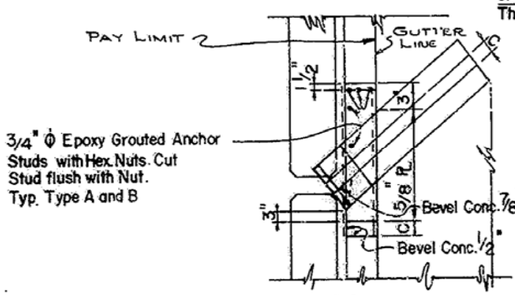

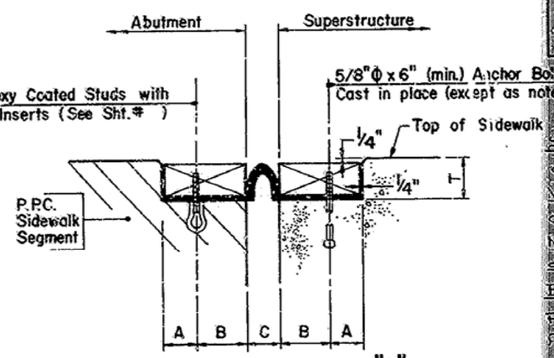

CROSS SECTION - TYPE "A"
(AT ABUTMENT 1 - SIDEWALK)

NOTE: EXPANSION DAM (4") - TYPE "B" SHALL NOT BE USED.

① FOR EXPANSION DAM AT ABUT. 2, SEE SHEET 41A.

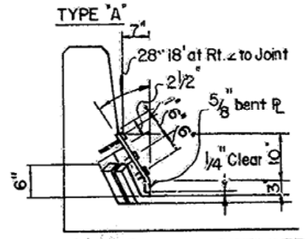

~ TYPICAL END TREATMENT — SKEWED BRIDGE ~

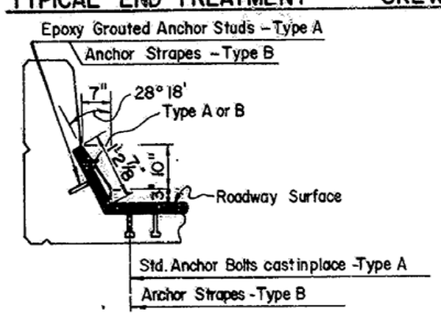

INCREMENT FOR 10° TEMP. CHANGE		
~ STEEL SPAN ~		
180'-240'	241'-320'	321'-395'
3/16"	1/4"	5/16"
~ CONCRETE SPAN ~		
320'-420'	421'-560'	561'-700'
3/16"	1/4"	5/16"

~ TYPICAL END TREATMENT — 0° SKEW BRIDGE ~

~ ALTERNATE NEOPRENE EXPANSION DAMS ~

TYPE	MODEL	SUPPLIER	T	A	B	C *
A	FEL-SPAN, MODEL T-40 A-CS	Fel-Pro Construction Products	2 3/8"	1 5/8"	2 7/8"	2 1/4"
A	ONFLEX, MODEL 40 with elastomeric hold down panels	Structural Accessories Inc.	1 7/8"	1 5/8"	2 5/8"	3"
A	WABO ELASTOFLEX with elastomeric hold down panels	Watson Bowman Associates Inc.	1 5/8"	1 3/8"	2 7/8"	2 1/2"
B	WABO STRIP SEAL Type A extrusions with S-400 seal	Watson Bowman Associates Inc.				2"
B	STEELFLEX Type RS3 with 400 seal	D.S. Brown Co				2 1/2"
B	GEN STRIP CD Profile A steel extrusion with Gen Strip CD seal	General Tire Co.				2 1/4"

GENERAL NOTES

* JOINT OPENING AT 60°F

SPECIFICATIONS: The Kentucky Dept. of Highway Standard Specifications for Road and Bridge Construction, Current edition with Revisions and Special Provision No 35 C.E.

WELDING SPECIFICATION: All Welding Materials, Welding Techiques and Welding Procedure shall comply with American Welding Society D11-80 Structural Welding Code with Revisions.

MILL TEST REPORTS: Notarized Statements in Triplicate shall be furnished to the Dept. of Highways showing that all Structural Steel Conform to the Specifications.

BASIS OF PAYMENT: The accepted quantities of Expansion Dam will be paid for at the contract unit price per Lin. Ft for each size, measured along the Centerline of joint. This payment shall be full compensation for all materials (including armored edges, anchor straps, anchor bolts, curb plates, welding and welding materials and installing hardware) and installation. Payment will be made under:

PAY ITEM	PAY UNIT
Expansion Dam 4" Neoprene	Linear Foot

MATERIAL SPECIFICATIONS: Steel material shall conform to A.S.T.M. designation A-36. Joint Sealing Material shall be in accordance with Special Provision No. 35 C.E.

LOCATION: The location of Expansion Dams shall be as shown on the Detail Plans.

PAINT: All Structural Steel shall be cleaned and painted in accordance with the Specifications.

PAY LIMIT: The pay limit shall be gutter line to gutter line.

NOTE: JOINT OPENINGS SHALL BE ADJUSTED FOR EACH 10° ABOVE OR BELOW 60°F, DECREASE OR INCREASE RESPECTIVELY BY INCREMENT SHOWN.

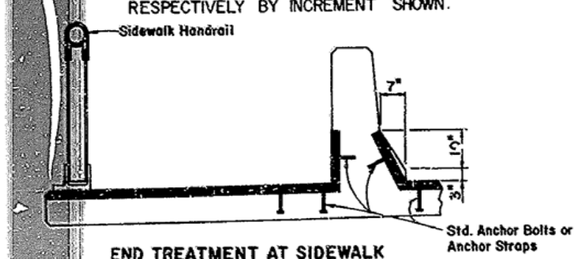

END TREATMENT AT SIDEWALK

NEOPRENE EXPANSION DAM (4")
(AT ABUTMENT 1)

Capital Plaza - West Frankfort Connector (Mero Street) Over The Kentucky River SHEET 41

COMMONWEALTH OF KENTUCKY
DEPARTMENT OF HIGHWAYS
FRANKFORT
COUNTY OF FRANKLIN
CAPITAL PLAZA WEST FRANKFORT CONNECTOR ROAD

STATION 153+50.00 | P.E. PROJECT NO. | CONSTRUCTION PROJECT NO. | MAINTENANCE PROJECT NO. | DRAWING NO. 21450

UPDATE DATE
LETTING DATE
REVISED Added End Treatment of Sidewalk Detail
DESIGNED BY
DETAILED BY
TRACED BY
CHECKED BY

UPDATE DATE

LETTING DATE

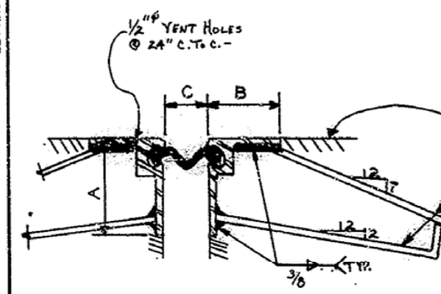

Shop Splice is Permissable in Steel Using Continuous Groove Welds

~ CROSS SECTION - TYPE "A" ~

(Abut. 2)

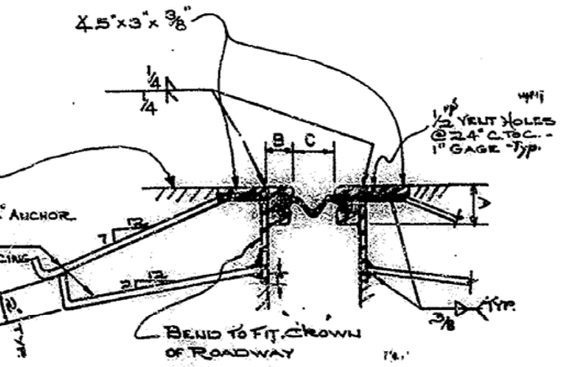

Shop Splice is Permissable in Steel Using Continuous Groove Welds.

~ CROSS SECTION - TYPE "B" ~

(Abut. 2)

~ ALTEF NEOPRENE EXPANSION DAMS ~

TYPE	MODEL	SUPPLIER		A	B	C *
A	WABO STRIP SEAL Type C extrusion with S-400 seal	Watson Bowman Associates Inc.		4 1/4"	3 3/4"	2"
B	WABO STRIP SEAL Type A extrusions with S-400 seal	Watson Bowman Associates Inc.		2"	1 1/2"	2"
B	STEELFLEX Type RS3 with 400 seal	D.S. Brown Co.		3"	1 1/4"	2 1/2"
B	GEN STRIP CD Profile A steel extrusion with Gen Strip CD seal	General Tire Co.		2"	1 3/8"	2 1/4"

GENERAL NOTES

* Joint Opening at 60°F

Specifications: The Kentucky Dept. of Highway Standard Specifications for Road and Bridge Construction, Current edition with Revisions and Special Provision No 35 C.E.

Welding Specification: All Welding Materials, Welding Techiques and Welding Procedure shall Comply with American Welding Society D11-80 Structural Welding Code with Revisions.

Mill Test Reports: Notarized Statements in Triplicate shall be furnished to the Dept. of Highways showing that all Structural Steel Conform to the Specifications.

Basis of Payment: The accepted quantities of Expansion Dam will be paid for at the contract unit price per Lin. Ft. for each size, measured along the Centerline of joint. This payment shall be full compensation for all materials (including armored edges, anchor straps, anchor bolts, curb plates, welding and welding materials and installing hardware) and installation. Payment will be made under:

Pay Item	Pay Unit
Expansion Dam 4" Neoprene	Linear Foot

Material Specifications: Steel material shall conform to A.S.T.M. designation A36. Joint Sealing Material shall be in accordance with Special Provision No. 35 C.E.

Location: The location of Expansion Dams shall be as shown on the Detail Plans.

Paint: All Structural Steel shall be cleaned and painted in accordance with the Specifications

Pay Limit: The pay limit shall be gutter line to gutter line.

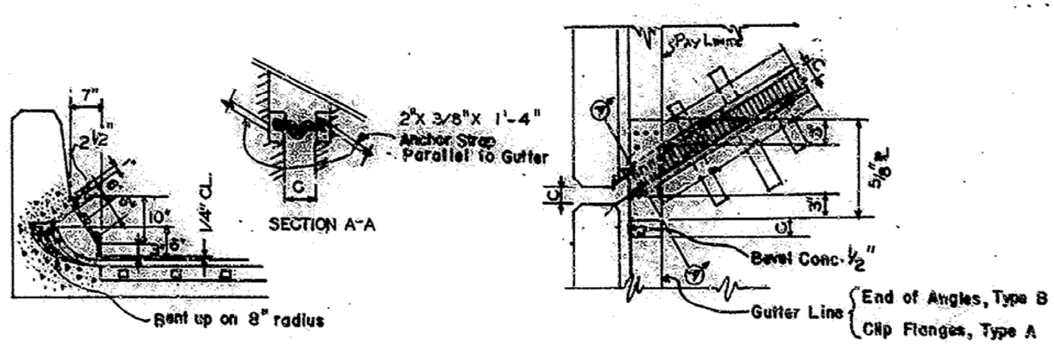

~ TYPICAL END TREATMENT - SKEWED BRIDGE ~

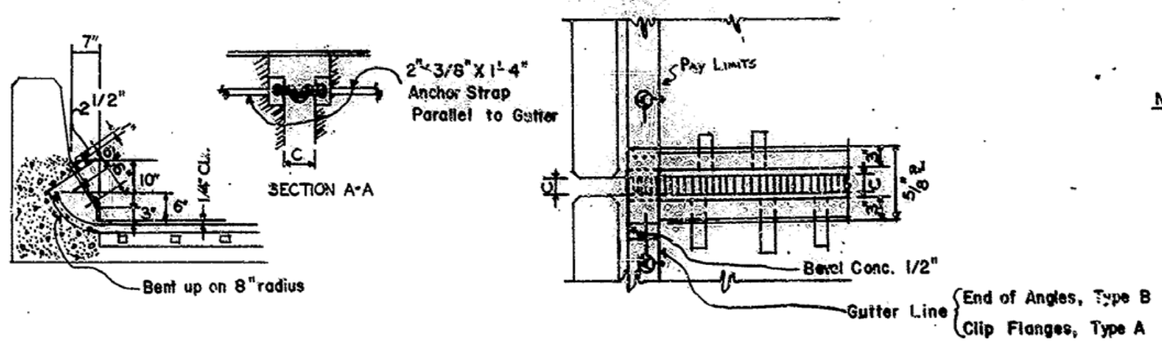

~ TYPICAL END TREATMENT - 0° SKEWED BRIDGE ~

NOTE: For End Treatment at Sidewalk, See Sheet #41.

NOTE: JOINT OPENINGS SHALL BE ADJUSTED FOR EACH 10° ABOVE OR BELOW 60°F, DECREASE OR INCREASE RESPECTIVELY BY INCREMENT SHOWN.

Increment for 10° Temp. Change		
~ Steel Span ~		
60'-240'	241'-320'	321'-395'
3/16"	1/4"	5/16"
~ Concrete Span ~		
320'-420'	421'-560'	561'-700'
3/16"	1/4"	5/16"

NEOPRENE EXPANSION DAM (4")

(AT ABUTMENT 2)

Capital Plaza - West Frankfort Connector
(Mero Street) Over The Kentucky River SHEET 41A

COMMONWEALTH OF KENTUCKY
DEPARTMENT OF HIGHWAYS
FRANKFORT
COUNTY OF
FRANKLIN
CAPITAL PLAZA WEST FRANKFORT CONNECTOR
ROAD

STATION 153+50.00 P. E. PROJECT NO.

CONSTRUCTION PROJECT NO. | MAINTENANCE PROJECT NO. | DRAWING NO. 21450

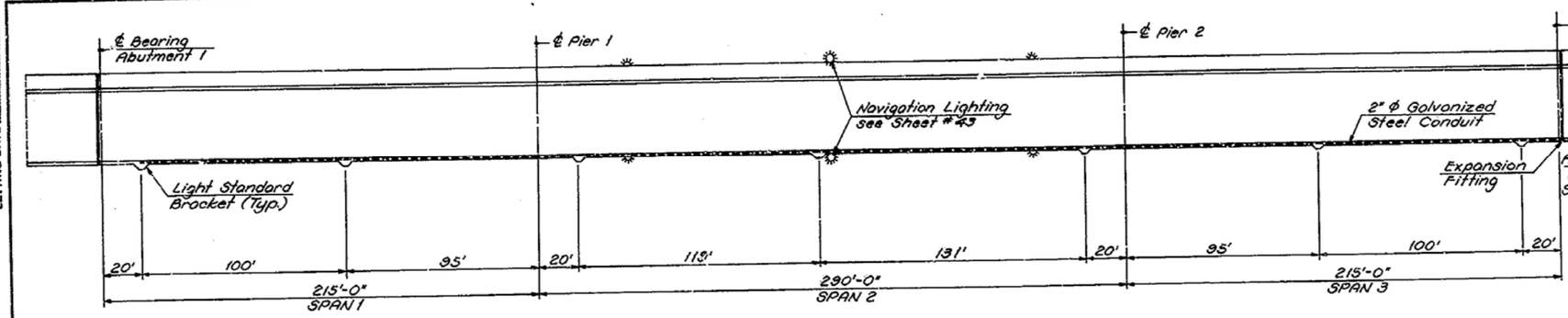

BILL OF REINFORCEMENT

MARK	TYPE	SIZE	NUMBER	LENGTH Ft.	LENGTH In.	LOCATION
X1(E)	1	#5	28	9	11	Light Bracket
X2(E)	2	↓	14	6	11	↓
X3(E)	3	↓	14	6	8	↓
X4(E)	4	#5	21	9	7	Light Bracket

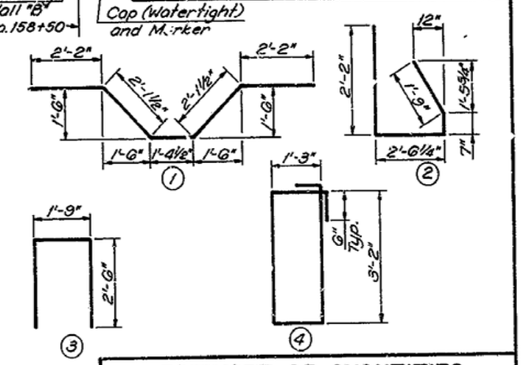

ESTIMATE OF QUANTITIES

ITEM	UNIT	QUANTITY
CLASS "AA" CONCRETE	CU.YD.	4.1
EPOXY COATED STEEL REINFORCING	LBS.	698

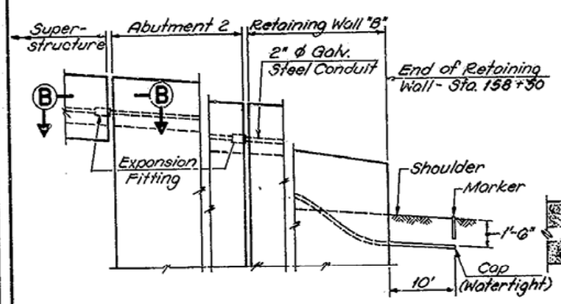

PART ELEV. AT RET. WALL "B"

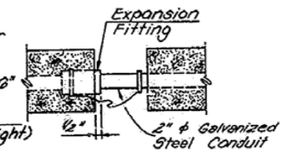

SECTION B-B
Typical Expansion Fitting for 2" ϕ Conduit

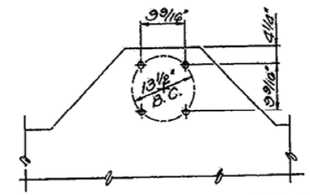

LIGHT STANDARD BOLT CIRCLE DETAIL

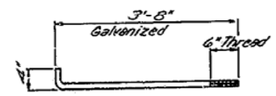

ANCHOR BOLT
(Steel - Minimum Yield Strength - 50,000 psi)

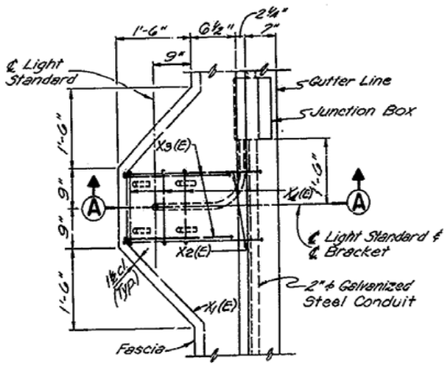

PLAN
FASCIA BRACKET DETAIL

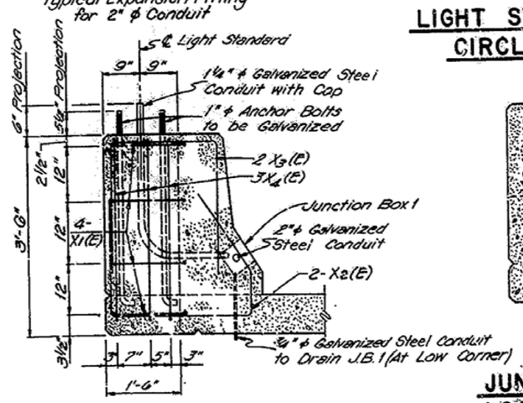

SECTION A-A

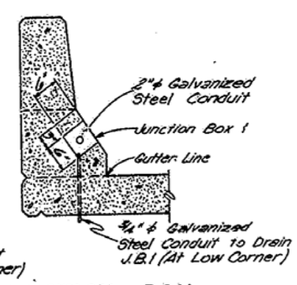

JUNCTION BOX LOCATION DETAIL

NOTES

All conduit to be rigid galvanized steel.

Concrete and reinforcement for brackets, where required, are included in Superstructure quantities.
Junction Boxes and Conduit are to be placed so as to interfere with a minimum amount of reinforcement. Bend reinforcement where necessary. Bond conduit to junction box.

Concrete Marker at terminal points of conduit is to consist of a 4" x 4" x 36" reinforced concrete post with 4 size No.2 deformed reinforcing steel rods. Marker to be 2" above grade.

Expansion Fitting for 2" conduit; manufacturer and number may be of any of the following:

Manufacturer	Number		
Crouse-Hinds Co.	Type XJ641	with GC100	Bonding Jumper
O-Z/Gedney Co.	Type EX200	with BJ1520-24	Bonding Jumper
Spring City Electric Co.	Type EF200	with EJ200	Bonding Jumper

*J.B.1 = Junction Box (NEMA 4); manufacturer and number may be any of the following:

Manufacturer	12" x 6" x 6"	18" x 6" x 6"
O-Z/Gedney Co.	Type YU	~~Type YR~~
Spring City Electric Co.	Type JR	~~Type FR~~
Hope Electric Products Co.	Type H6200	~~Type H7DQ~~

BILL OF MATERIALS

2" ϕ Galvanized Steel Conduit	850	Lin. Ft.
Concrete Markers	1	Each
* J.B.1 Junction Boxes	7	Each
Expansion Fittings	2	Each
2" ϕ Galvanized Conduit Cap	1	Each
¾" ϕ Galvanized Steel Conduit	7	Lin. Ft.
1¼" ϕ Galvanized Steel Conduit	35	Lin. Ft.
1" ϕ Anchor Bolts (See Detail)	28	Each
1¼" ϕ Galvanized Cap	7	Each

Cost of these materials is incidental to Class "AA" Concrete.

SUPERSTRUCTURE LIGHTING

Capital Plaza - West Frankfort Connector
(Mero Street) Over The Kentucky River SHEET 42

COMMONWEALTH OF KENTUCKY
BUREAU OF HIGHWAYS
FRANKFORT
COUNTY OF
FRANKLIN
CAPITAL PLAZA WEST FRANKFORT CONNECTOR
ROAD

STATION 153+50.00 P.E. PROJECT NO.

CONSTRUCTION PROJECT NO. | MAINTENANCE PROJECT NO. | DRAWING NO. 21450

UPDATE DATE
LETTING DATE

DIETZGEN 11-76

UPDATE DATE.....

LETTING DATE.....

NAVIGATION LIGHTING		
ITEM	STATION ℄	B & B ELECTROMATIC CORP. STD.
RED NAVIGATION LIGHT # 1	152+68.11	MSC302LKRTOW - AR180
RED NAVIGATION LIGHT # 2	154+73.49	↕
RED NAVIGATION LIGHT # 3	152+76.51	↕
RED NAVIGATION LIGHT # 4	154+81.89	MSC302LKRTOW - AR180
GREEN NAVIGATION LIGHT # 1	153+70.80	MSC30LK-RTOW - AR360
GREEN NAVIGATION LIGHT # 2	153+79.20	MSC30LK-RTOW - AR360

NOTE:
R.N.L.- denotes Red Navigation Light
G.N.L.- denotes Green Navigation Light

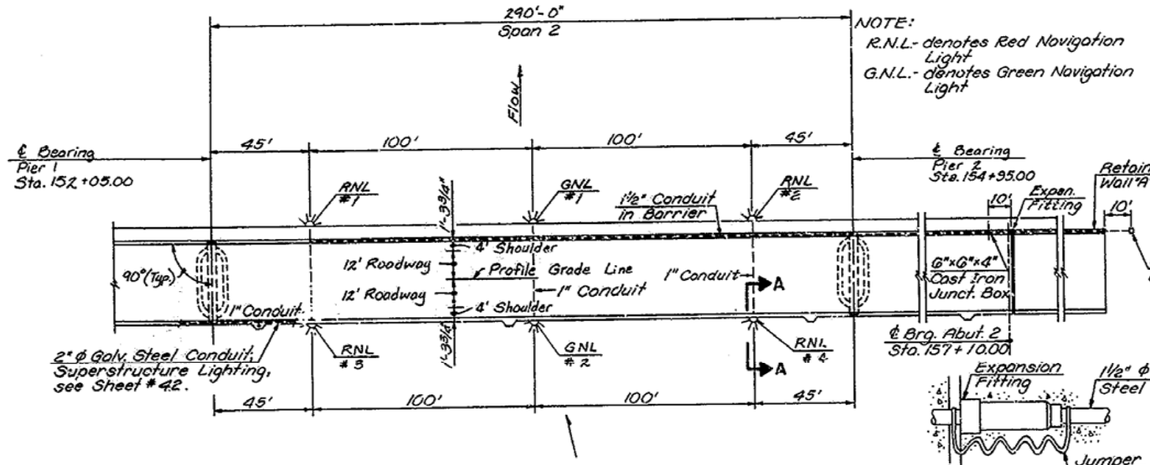

PLAN

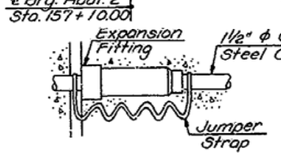

EXP. FITTING DETAIL

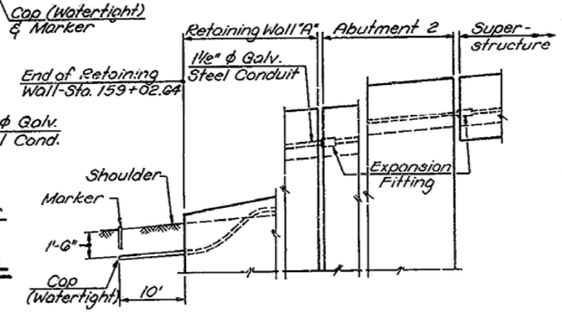

PART ELEV. AT RET. WALL "A"

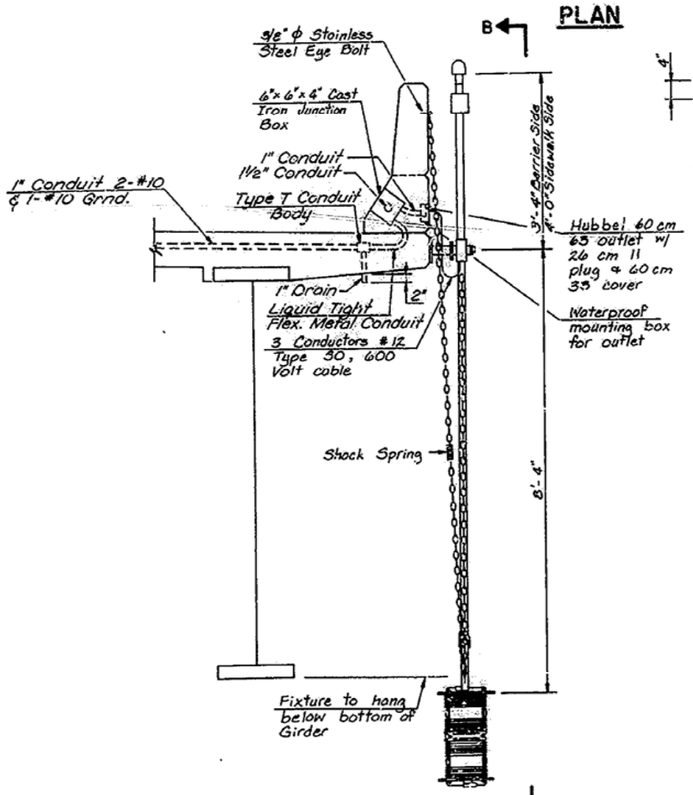

SECTION A-A

NOTE: South Barrier side shown, Sidewalk side similar. See also Sheet #38.

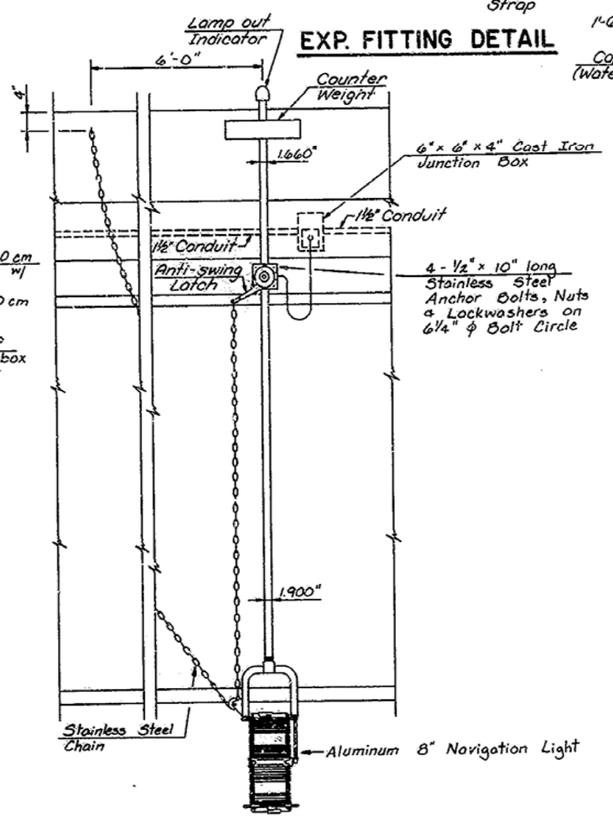

VIEW B-B

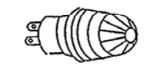

INDICATOR LIGHT

NOTES - INDICATOR LIGHT

1. An Indicator Light shall be provided for each circuit and mounted as shown in View B.
2. Indicator Light shall be a "Dialco" Cat. No. 95-0410-09-031 with stovepipe transparent lens as manufactured by Dialight Corp. Brooklyn, N.Y.
3. One spare light shall be supplied and stored in the Service Panel.

NOTES:

1. The Navigation Lighting shall be installed to conform to the following:
   a) Standard Specifications for Road and Bridge Construction, KY Transportation Cabinet.
   b) Current edition of the National Electric Code (1981).
   c) Federal Regulation Title 33, Part 8
2. The Ground Conductor and all non-current carrying parts of the Navigation lighting system shall be connected to the Service pole ground system via messenger cables.
3. Drains shall be installed in all Junction boxes. Conduits should be connected to boxes with threaded hubs or approved threaded hub fittings.
4. All conduits should be heavy wall Hot Dipped Galvanized.
5. Wire splicing shall only be permitted in fully accessible junction boxes.
6. Manufactured items shown on this drawing may be substituted with approved equals.

Lump Sum Bid for Navigation Lighting shall include Navigation Lights, Conduit, Junction Boxes, Expansion Fittings and other Materials, equipment and labor necessary to construct the Navigation Lights in place.

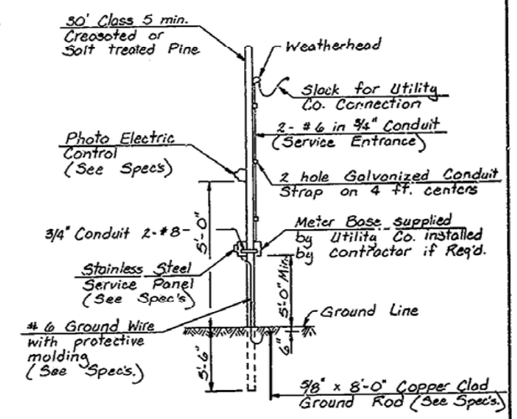

SERVICE POLE

NAVIGATION LIGHTING

Capital Plaza - West Frankfort Connector
(Mero Street) Over The Kentucky River SHEET 43

COMMONWEALTH OF KENTUCKY
DEPARTMENT OF HIGHWAYS
FRANKFORT
COUNTY OF FRANKLIN
CAPITAL PLAZA WEST FRANKFORT CONNECTOR ROAD

STATION 153+50.00 P.E. PROJECT NO.

CONSTRUCTION PROJECT NO. | MAINTENANCE PROJECT NO. | DRAWING NO. 21450

DESIGNED BY WAC	CHECKED BY RHO	DATE 1-86	REVISED
DETAILED BY SWF	CHECKED BY DCD	DATE 2-86	REVISED
TRACED BY TLK	CHECKED BY DCD	DATE 3-86	REVISED

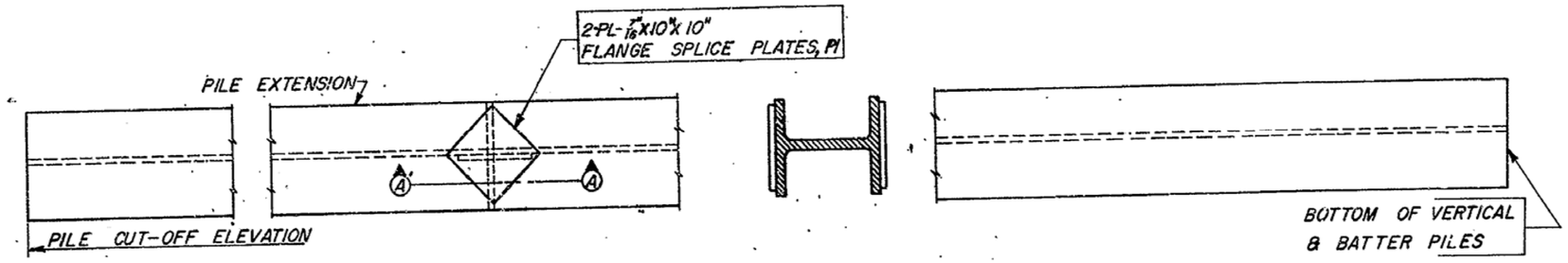

NOTE: Bevel Flanges And Web of Pile Extension on 1:1 bevel as shown and employ conventional butt weld.

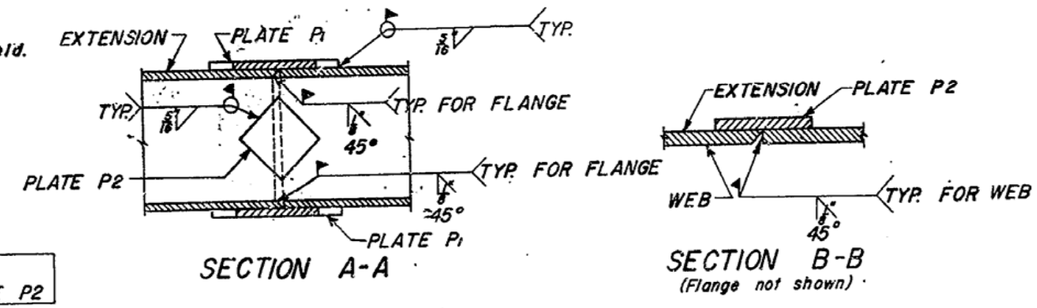

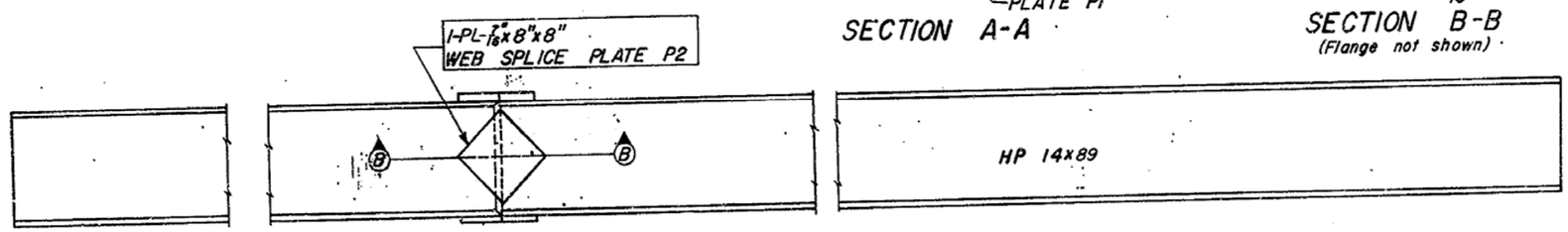

GENERAL NOTES

SPECIFICATIONS: The Kentucky Department of Highways Standard Specifications for Road and Bridge Construction, current edition.

MATERIALS: Structural steel piles shall conform to A.S.T.M. A36, current specifications.
SPLICE PLATES: Splice plates shall conform to A.S.T.M. A36, current specifications.
FIELD WELDING: Field Welding Material and Workmanship for all piling shall conform to the requirements of the Kentucky Department of Highways Standard Specifications, current edition. Piles shall be spliced as indicated above only when driven below cut-off elevation.
PAYMENT: Payment for the piles in accordance with plans and specifications shall be made at the contract price per linear foot.

PAINT: No paint shall be required on steel piles.
MILL TEST REPORTS: Notarized mill test reports in triplicate shall be furnished the Department showing that all materials furnished conform to the specifications.

14" STRUCTURAL STEEL BEARING PILE AT 89 LBS.

Capital Plaza - West Frankfort Connector
(Mero Street) Over The Kentucky River SHEET 44

COMMONWEALTH OF KENTUCKY
DEPARTMENT OF HIGHWAYS
FRANKFORT
COUNTY OF
FRANKLIN
CAPITAL PLAZA WEST FRANKFORT CONNECTOR
ROAD
STATION 153+50.00 P. E. PROJECT NO.
CONSTRUCTION PROJECT NO. MAINTENANCE PROJECT NO. DRAWING NO. 21450

DRAWN J.B.S. 6-71
CHECKED W. Overstreet 6-71
RECOMMENDED S. J. Amato 6-71

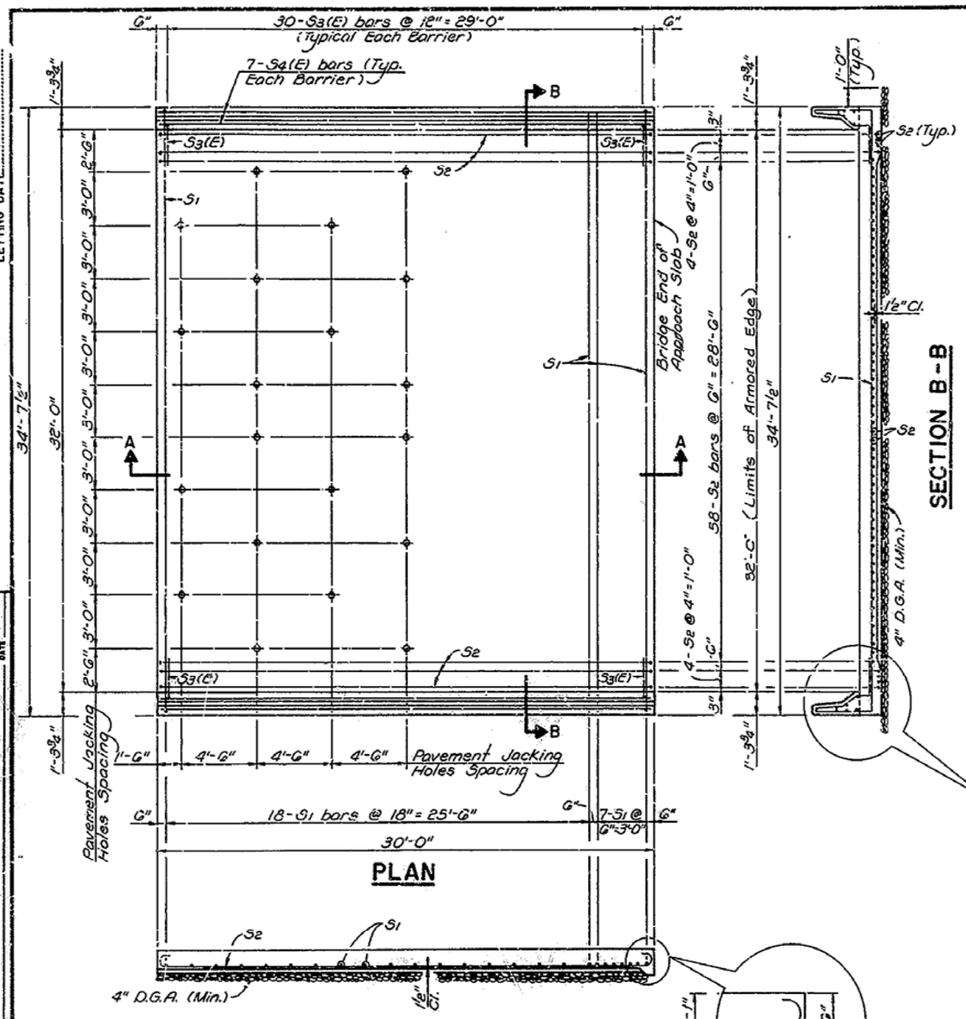

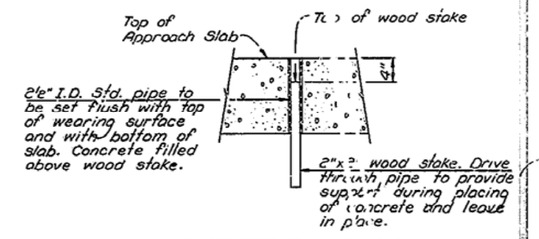

PAVEMENT JACKING HOLE DETAIL

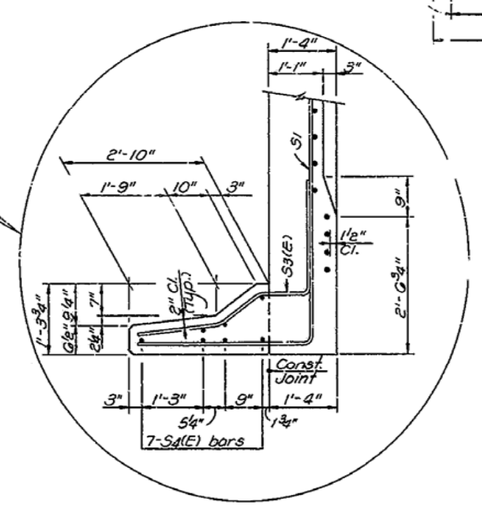

(TYPICAL EACH SIDE OF PAVEMENT)

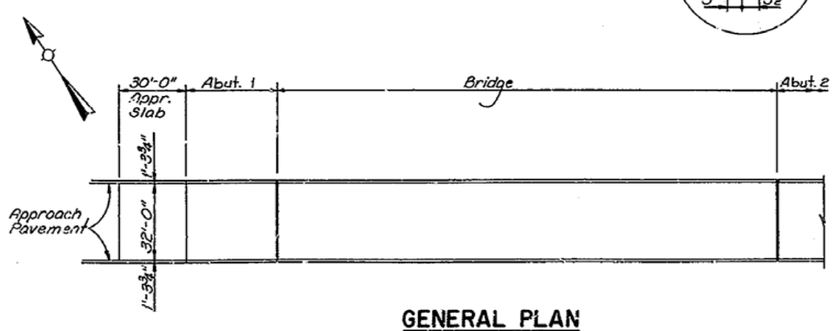

GENERAL PLAN

GENERAL NOTES

CROWN:
Crown shall conform to the rate of crown at the approach pavement and bridge deck. If the rate of crown at the bridge deck differs from that of approach pavement, a smooth transition shall be provided within the limits of the approach slab.

CONCRETE:
Concrete shall be Class "AA".

REINFORCEMENT:
All bar reinforcement shall be grade 60. Bars designated by suffix (E) shall be epoxy coated in accordance with Specifications.

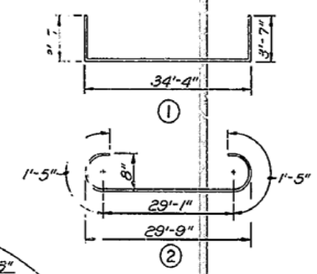

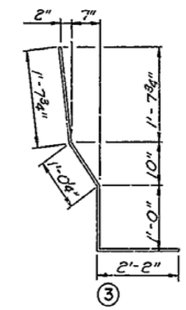

BILL OF REINFORCEMENT

MARK	TYPE	SIZE	NUMBER	LENGTH Ft.	LENGTH In.	LOCATION
S1	1	#5	25	41	5	Approach Slab
S2	2	#8	66	31	11	Approach Slab
S3(E)	3	#5	60	5	9	Approach Slab
S4(E)	Str.	#5	14	29	9	Barrier

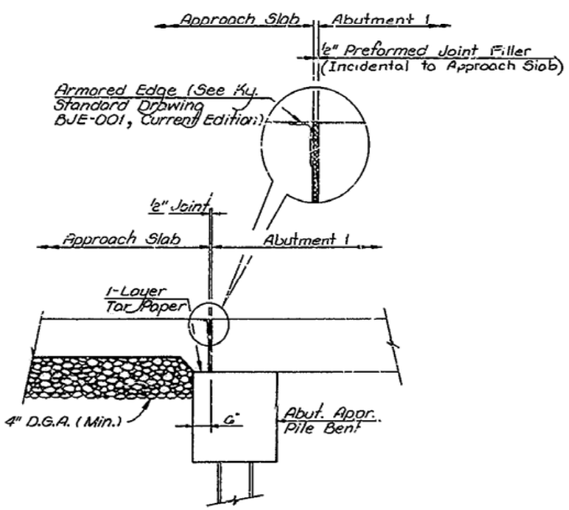

SECTION SHOWING JUNCTION OF APPROACH SLAB WITH ABUTMENT

ESTIMATE OF QUANTITIES*

ITEM	UNIT	QUANTITY
CLASS "AA" CONCRETE	CU. YD.	60.4
STEEL REINFORCEMENT	LBS.	6,704
EPOXY COATED STEEL REINFORCEMENT	LBS.	794

* Bid Item is Approach Slab (S.Y.) and Includes all Class "AA" Concrete, Steel Reinforcement, plain and epoxy coated, DGA, Structural Steel for Armored Edge, and Preformed Joint Filler required to construct the Approach Slab.

Capital Plaza-West Frankfort Connector (Mero Street) Over the Kentucky River SHEET 45

COMMONWEALTH OF KENTUCKY
DEPARTMENT OF HIGHWAYS
FRANKFORT
COUNTY OF
FRANKLIN
CAPITAL PLAZA-WEST FRANKFORT CONNECTOR ROAD
STATION 153+50.00 P.E. PROJECT NO.
CONSTRUCTION PROJECT NO. | MAINTENANCE PROJECT NO. | DRAWING NO. 21450

APPROACH SLAB DETAILS

UPDATE DATE
LETTING DATE

DESIGNED BY KDOT CHECKED BY WBC DATE 5-87 REVISED
DETAILED BY RRV CHECKED BY WBC DATE 5-87 REVISED
TRACED BY CHECKED BY DATE REVISED

7-13-73 FORM NO 2