SPECIAL NOTES FOR KENTUCKY LAKE BRIDGE PROJECT

NOT FOR CONSTRUCTION - *DRAFT* - OCTOBER 15, 2013

SPECIAL NOTES (BRIDGE):
FOR DYNAMIC PILE TESTING
FOR STEEL PIPE PILES – FURNISH
FOR STEEL PIPE PILES – INSTALL
FOR VIBRATION MONITORING
FOR STEEL ERECTION – ARCH SPAN
FOR STEEL ERECTION – APPROACH SPANS
FOR STAINLESS STEEL REINFORCEMENT
FOR BRIDGE STRAND HANGERS
FOR DISK BEARINGS
FOR SEISMIC ISOLATION BEARINGS – LEAD CORD ELASTOMERIC
FOR SEISMIC ISOLATION BEARINGS – FRICTION
FOR SEISMIC DAMPERS
FOR FINGER EXPANSION JOINT
FOR MODULAR EXPANSION JOINT
FOR LIGHTNING PROTECTION SYSTEM
FOR DECORATIVE FENCE PANEL
FOR SHOP DRAWINGS & WELDING PROCEDURES
(6U) FOR STRUCTURAL MASS CONCRETE

SPECIAL PROVISIONS (BRIDGE):
(69) FOR EMBANKMENT AT BRIDGE END BENT STRUCTURES

SPECIAL NOTES (GENERAL/ROADWAY):
FOR HELPER BOAT
FOR REMOVAL OF EXISTING BRIDGE
FOR CONSTRUCTION TRAILER
FOR WEB CAMERA CONSTRUCTION MONITORING SYSTEM
FOR CPM SCHEDULING
FOR PROJECT INSPECTION BOAT
FOR COMMUNUCATING ALL PROMISES

SPECIAL NOTE FOR DYNAMIC PILE TESTING - **DRAFT**

Marshall/Trigg Counties Item No. 1-180.70
Kentucky Lake Bridge

1.0 GENERAL

1.1 Scope of Work

The scope of work includes furnishing all labor, equipment and analyses associated with dynamic testing of driven piles as specified in this Special Note and in general accordance with ASTM D4945, High-Strain Dynamic Testing of Piles. Dynamic testing involves attaching strain transducers and accelerometers, as defined in Section 2.3.2 of this Special Note, to the pile near the pile head during initial driving or at an appropriate location during restrike testing. A cable or wireless transmission connects the sensors near the pile head with the Pile Driving Monitoring Hardware located a safe distance from the pile. The piles that are to be tested must be of sufficient extra length to ensure that sensors are not driven into the ground or water.

For the purposes of this Special Note, "Department" refers to the Kentucky Department of Highways and/or consultants acting on behalf of the Department of Highways. Engineer is defined in Section 101.03 of the Standard Specifications.

1.2 Test Locations

Perform testing on piles designated in the plans or as directed by the Engineer. The Department reserves the right to require the contractor to perform dynamic testing on additional piles, if deemed necessary.

1.3 Personnel Qualifications

Perform dynamic pile testing using the services of an independent Dynamic Pile Testing Consultant with qualified personnel assigned to this project as described below. Personnel should demonstrate experience similar to the type and magnitude of the project.

- Pile Driving Monitoring – A licensed professional engineer with a minimum of 5 years dynamic pile testing and analysis experience or who has achieved Advanced or better certification under the High-Strain Dynamic Pile Testing Examination or Certification process of the Pile Driving Contractors Association or Foundation QA.

- Wave Equation and Pile Driving Analyses – A licensed professional engineer with a minimum of 10 years dynamic pile testing and analysis experience or who has achieved Master or better certification under the High-Strain Dynamic Pile Testing Examination or Certification process of the Pile Driving Contractors Association or Foundation QA.

1.4 Equipment

Supply equipment such as sensors, cables or wireless transmitters, etc. conforming to ASTM D4945, High-Strain Dynamic Testing of Piles and furnished by the dynamic testing consultant. Submit the product name and manufacturer of the hardware and software components below for acceptance by the Department in Submittal Number 2. If requested by the Department, submit additional information including technical specifications, etc.

- Pile Driving Modeling – Wave Equation Software
- Pile Driving Monitoring – Hardware & Software
- Pile Driving Analysis – Signal Matching Software

1.5 Submittals and General Testing & Analysis Requirements

Refer to the Summary of the October 22, 2013, Contractor Information Meeting for information regarding the submittal, review, and acceptance process. See Tables 1 and 2 below. The Department will respond to the Contractor regarding acceptability of submittals within 10 business days.

Table 1 – Schedule of Dynamic Pile Testing Submittals

Submittal Number	Submittal Item	Calendar Days	Event
1	Proposed independent dynamic pile testing consultant, and a listing of assigned personnel and their experience and qualifications.	30 After	Notice to Begin Work
2	Details of the hardware and software components, method of testing, and materials to be used. Include sensor calibration documentation. Include pile hammer warm-up procedure for restrike tests.	45 Before	Start of Pile Driving/Monitoring
3	Complete *Pile and Driving Equipment Data Form* (Figure 1 of the Special Note) and the results of wave equation analyses.	30 Before	Start of Pile Driving/Monitoring
4	Preliminary report(s) as defined in Section 3.1 of this Special Note.	1 After (24 hrs.)	Completion of Each Field Test
5	Summary Report(s) as defined in Section 3.2 of this Special Note.	10 After	Completion of All Field Tests

Table 1 – Schedule of Dynamic Pile Testing Submittals
Provide all submittals and reports in .pdf format

Table 2 – General Testing and Analysis Requirements	
Item	Requirements
Wave Equation Analysis	Perform analyses in Table 3 and sufficient additional analyses as needed to define performance for all combinations of piles, driving systems, and subsurface conditions anticipated.
End of Initial Driving Test Frequency	Minimum of one pile for each substructure or as directed by the Engineer.
Beginning of Restrike Test Frequency	Minimum of one pile for each substructure or as directed by the Engineer.
Time Interval between End of Initial Driving and Restrike Tests	Perform restrike tests on dynamically tested piles at 72 hours (+/- 6 hours) and 168 hours (maximum of 192 hours) after driving unless directed otherwise by the Engineer.
Pile Driving Analyses using Signal Matching Techniques	For each End of Initial Driving Test and each Restrike Test
Perform testing, analyses and reporting in accordance with this table and ASTM D4945, *High-Strain Dynamic Testing of Piles.*	

Perform and submit wave equation analyses for one pipe pile at each end bent location and one pipe pile of each diameter within the station ranges indicated below using the representative pier for each driving hammer and system proposed for use. Perform analyses to demonstrate that the pile hammer has sufficient energy to install the piles to the design tip elevation and required nominal resistances at the end of driving (EOD) and beginning of restrike (BOR) without overstressing or damaging the piles. Dynamic testing results will determine the driving criteria and control the final pile tip elevation.

Table 3- Wave Equation Analyses Locations	
Pier or End Bent Group	**Representative Pier or End Bent for Wave Equation Analyses**
End Bent 1	End Bent 1
Pier 1	Pier 1
Piers 2 and 3	Pier 3
Pier 4	Pier 4
Pier 5	Pier 5
Pier 6	Pier 6
Piers 7 and 8	Pier 8
Pier 9	Pier 9
End Bent 2	End Bent 2

2.0 TESTING AND ANALYSES

2.1 Preconstruction Wave Equation Analyses

At least 30 calendar days before beginning pile driving, submit to the Department the completed Pile and Driving Equipment Data Form (Figure 1 of this Special Note) and preconstruction wave equation analyses performed by the Independent Dynamic Pile Testing Consultant in accordance with Table 2 in this Special Note and a summary report of the results. The required driving criteria are outlined in Section 2.2.1 of the Special Note for Driven Pipe Pile Installation.

Prior to bidding, additional wave equation analyses may be performed by the bidders to select the appropriate driving system. Bidders are advised to retain an engineering consultant to perform independent wave equation analyses in order to select hammer(s) that meets the specified requirements for this project. This engineering consultant should meet the criteria for "Wave Equation and Pile Driving Analyses" in Section 1.3 of this Special Note and have extensive experience performing wave equation analyses, dynamic pile testing and signal matching analyses on projects with pile and hammer sizes similar to those to be used on this project.

The purpose of the wave equation analyses is to assess the ability of all proposed pile driving systems to install piles per the outlined driving criteria. Model the 72-inch diameter pipe piles with the constrictor plates with a double toe, to account for bearing resistance at the bottom of the constrictor plate. The contractor will select the pile hammers for the 72-inch-diameter pipe piles at the pier locations and 30-inch diameter pipe piles at the end bents based upon the criteria described below.

Select hammer(s) with the following characteristics:

- Capable of producing 0.33 to 0.1 inches of set (3 to 10 blows per inch) when verifying 75% of the required nominal axial resistance at the end of initial drive and the required nominal axial resistance on restrike, and
- Produce driving stresses not exceeding 90% of the yield stress of the steel based on wave equation analysis.
- Capable of varying the stroke or energy to control driving stresses. The results of wave equation analyses may be used to assess the need for varying the stroke or energy.
- Refer to the Special Note for Pipe Pile Installation for additional driving system criteria, including minimum hammer energies based upon pipe pile diameters and type of substructure.

Do not mobilize hammer(s) to site until the wave equation analysis and hammer selection have been reviewed and accepted by the Department.
In the Wave Equation Summary Report, include:

- drivability graph relating pile resistance (i.e. capacity), blow count and driving stresses to depth;
- bearing graph relating the pile resistance (i.e. capacity) to the pile driving resistance which indicates blow count versus resistance (i.e. capacity) and stroke or energy;
- constant resistance (i.e. capacity) analysis or inspectors chart to assist the Department in determining the required driving resistance at other field-observed strokes or energy; and
- discussion and interpretation of the results.

2.1.1 The Department will base acceptance of the proposed pile driving system upon the wave equation analyses indicating that the proposed system can meet the driving criteria outlined in Section 2.2.1 of the Special Note for Driven Pipe Pile Installation.

2.1.2 If any changes or modifications are made to the approved pile driving system, submit additional wave equation analyses in accordance with Section 2.1 of this Special Note.

2.2 High-Strain Dynamic Pile Testing

2.2.1 Perform dynamic pile testing at the locations and frequency required in accordance with Table 2 and Section 1.2 in this Special Note.

2.2.2 Dynamic pile testing involves monitoring the response of a pile subjected to heavy impact applied by the pile hammer at the pile head. The testing will provide information on the driving stresses, pile resistance (i.e. capacity), structural integrity, and hammer efficiency.

2.2.3 Engage an independent dynamic pile testing consultant and qualified personnel in accordance with Section 1.3 of this Special Note. Prior to testing, the Department will review and accept the proposed independent dynamic pile testing consultant, the experience and qualifications of assigned personnel, details of the method of testing, a list of equipment, and the method of analysis of test results.

2.2.4 Perform all field testing and measurements in the presence of the Engineer or authorized representative.

2.2.5 Remote Dynamic Pile Testing where data is collected in the field and sent to the office of the Dynamic Pile Testing Consultant will not be allowed on this project. The testing consultant is required to have at least one person meeting the requirements for "Pile Driving Monitoring" as defined in Section 1.3 of the Special Note for Dynamic Pile Testing in the field during all dynamic pile testing. However, "wireless" technology that eliminates cables from the test pile to the data acquisition equipment will be allowed.

2.3 Field Testing

2.3.1 Equipment

Perform dynamic pile testing field measurements using equipment, software and recording equipment approved in accordance with Section 1.4 of this Special Note. Consultant will analyze the data collected at the end of initial driving and the beginning of restrike using accepted signal matching techniques and software.

Provide safe access to the piles allowing the independent testing consultant to attach the sensors, including man lifts, shelters, etc.

2.3.2 Monitoring During Driving

During pile driving, instrument the piles and monitor them with testing equipment satisfying the requirements of Section 1.4 of this Special Note. Prior to lifting the pile to be dynamically tested in to place, provide a minimum of 3 feet of clearance to the gage locations on the pile for pile preparation, then drill and prepare holes for sensor attachment. Attach sensors a minimum of two diameters below the pile head.

- Install strain transducers and accelerometers near the head of each pile to be tested, and use a compatible measuring and recording system to record the data during driving.
- Install a minimum of four sets of transducers/accelerometers (arranged at a 90 degree spacing around the pile).

- Appropriately position and fix the equipment required to be attached to the pile to the satisfaction of the Engineer.
- Use the testing equipment to monitor pile stresses during driving to prevent pile damage and ensure pile integrity and resistance (i.e. capacity).
- Do not exceed driving stresses of 45 ksi (90% of specified 50 ksi yield stress steel) or 40.5 ksi (90% of specified 45 ksi yield stress steel).
- Refer to the driving criteria in Section 2.2.1 of the Special Notes for Driven Pipe Pile Installation.

2.3.3 Preparation of the Pile Head

Preparation of the pile head for the application of dynamic test load may involve, where appropriate, trimming the head, cleaning, and building up the pile using materials that, at the time of testing, safely withstand the impact stresses. Provide an impact surface that is flat and at right angles to the pile axis.

2.3.4 Dynamic Measurement and Analysis

Monitor pile driving when pile driving begins unless otherwise allowed by the Engineer. Record and process the data immediately in the field by the pile driving monitoring equipment and software. Unless monitoring indicates that additional driving will damage the pile, continue pile driving and monitoring until the driving criteria outlined in Section 1.2.1 is satisfied. Make any required adjustments to the fuel and/or power setting of the hammer if necessary to verify the resistance within the specified range of blow counts or to meet other applicable testing objectives. When the level of the sensors is within 1 foot of any obstruction endangering the survival of sensors or cables, halt driving and remove sensors from the pile. If additional driving is required, remove the obstruction or splice the pile and reattach the sensors near the head of the next pile segment prior to resuming driving. For each initial drive and restrike dynamic pile test, as defined in Section 5.0 of this Special Note, perform pile driving analysis using signal matching techniques for up to 3 selected hammer blows to determine the relative resistance (capacity) from end bearing and skin friction along the length of the pile.

- Perform beginning of restrike (BOR) tests at the frequency indicated in Table 2 of this Special Note with the time interval between end of initial driving and beginning of restrike in accordance with Table 2 of this Special Note. During restrike, instrument and monitor the pile

in a manner similar to that used during initial driving. For each restrike test, perform pile driving analysis using signal matching techniques for selected blows from the beginning of restrike to determine the relative resistance from end bearing and skin friction along the length of the pile.

- Perform restrike tests with a warmed-up hammer (if applicable) by striking the pile a maximum of 5 blows unless testing equipment indicates overstressing or damage to the pile. Include the hammer warm-up procedure in Submittal No. 2. If hammer warm-up is not required, the hammer operation should at least be checked and confirmed by a qualified operator.

- If directed by the Engineer, advance the pile and perform re-drive dynamic testing immediately after performing a restrike test. Perform one or more selected hammer blows at the end of the re-drive.

- If such overstressing or damage to the pile is indicated, immediately discontinue driving and notify the Engineer. If the contractor overdrives the pile during restrike testing, additional wait/setup time may be required by the Engineer. In the event initial restrike testing indicates a pile resistance below the specified resistance, additional driving may be required as directed by the Engineer.

- The Engineer may require dynamic pile testing on additional piles if inconclusive results are obtained or unusual driving conditions are encountered.

- Evaluate pile resistance and integrity based on the standard procedure used in practice.

- Provide the Department within 24 hours with tabular records of the dynamic pile testing field measurements obtained at the end of initial driving and at the beginning of restrike.

3.0 DYNAMIC PILE TEST REPORTS

3.1 Preliminary Dynamic Pile Test Reports

Submit a preliminary test report for each pile tested (for both EOD and BOR tests) for review by the Department. In the reports, include narrative, tabular as well as graphical presentation of the dynamic test results versus depth of the pile tested. Also include the following:

- Maximum force applied to the pile head.
- Maximum pile head velocity.
- Maximum energy imparted to the pile.
- Assumed soil damping factor and wave speed.
- Static resistance (i.e. capacity) estimate.
- Maximum compressive and tensile forces in the pile.
- Pile integrity.
- Blows per inch.
- Stroke length.
- Datum elevation and description of datum (i.e. template, water surface, mudline, etc.).
- Mudline elevation.
- Elevation of soil inside the pile above the constrictor plate at end of drive and beginning of restrike.
- Elevation of soil inside the pipe piles at the end bents at end of drive and indicate whether plugging has occurred in the pipe pile.
- Pile tip elevation.
- Signal matching analysis for EOD and/or BOR. Both BOR and EOD if a re-drive is requested.
- Impact of driving shoe on the signal matching model.
- Number of usable (in-calibration and operational) accelerometers and strain gages.
- Actual elapsed hours since end of drive, for restrikes only.
- Refined wave equation based upon dynamic testing analysis, including inspector's chart.

Provide data files of the results for independent analyses by the Department.

3.2 Dynamic Pile Test Summary Report

Submit a summary report, including signal matching, for each pile tested for review by the Department. Include the results of hammer performance, pile driving stresses, and pile resistance during initial driving and restrike for all piles tested. Resolve any issues between the saximeter, inspector's records and the blow counts recorded on the

dynamic testing equipment in the summary report. Also include the following for both EOD and BOR tests:

- Pile number and location.
- Date of testing and date of pile installation.
- Pile identification number and location.
- All information given in preliminary reports not listed here.
- Hammer type, stroke length, hammer energy and other relevant details.
- Blow selected for signal matching analysis.
- Maximum compressive and tensile stresses, stroke, and resistance (i.e. capacity) versus penetration depth.
- Temporary compression.
- Pile integrity and location of damage, if any.
- Force/velocity versus time trace.
- Wave up and wave down versus time trace
- Force/velocity match curve.
- Resistance distribution along the pile.
- Detailed graphical and tabular results from blow analyzed using signal matching techniques and software.
- Narrative description of second toe used in the signal matching model and the amount of resistance applied at the base of the second toe and the pile toe for the 72-inch diameter pipe piles.
- Discussion of impact of the constrictor plate on the pile impedance, wave speed and any other dynamic properties of the pile for the 72-inch diameter pipe piles.
- Discussion of match quality and impacts assumptions within the signal matching model may have had on the match quality of the signal matching results.
- Narrative describing the data, results, and their interpretation.

4.0 INCIDENTAL EQUIPMENT

Prior to the beginning of dynamic testing, provide one electronic device to aid in recording pile hammer blows, stroke, and energy such as an "E-Saximeter" or approved equivalent meeting the specifications in the Appendix to this Special Note. This device will immediately become property of the Department for use on this project.

Provide field training by someone proficient in the use of the device to ensure that approximately 3 to 5 employees of the Department are competent in the use of the device. This training may be performed by a representative of the

independent Dynamic Pile Testing Consultant who is proficient in the use of the device or a manufacturer's representative. The required training time is anticipated to be no more than one day.

The cost of furnishing this device and providing the training is incidental to the contract price for the "Dynamic Pile Testing" items and no separate payment will be made.

5.0 MEASUREMENT

DYNAMIC PILE TESTING

Dynamic pile testing on selected production piles will be measured per each. Payment for each restrike test performed will be separate from payment for each test performed during initial driving. Payment for each test will include pile driving monitoring and pile driving analysis (including wave equation and signal matching work) performed. Payment for the below described work, including all material, equipment, tools, labor, reporting and any other incidental work necessary to complete these items.

5.1 Dynamic Pile Testing-On Water-Initial

Initial drive is the end of drive (EOD) condition when the initial driving conditions defined in the Special Note for Driven Pipe Pile Installation. On water refers to the bridge piers where access will be from barges situated on the lake.

5.2 Dynamic Pile Testing-On Land-Initial

Initial drive is the end of drive (EOD) condition when the initial driving conditions defined in the Special Note for Driven Pipe Pile Installation. On land refers to the end bents were the piles can be accessed from land.

5.3 Dynamic Pile Testing-On Water-Restrike

Restrike is applying hammer blows to the pile head after a prescribed time period to determine the pile resistance at the specified time period. Apply no more than five (5) hammer blows during restrike after the specified time period has elapsed. The cost of any re-drive dynamic testing performed immediately after restrike is incidental to the restrike. On water refers to the bridge piers where access will be from barges situated on the lake.

5.4 Dynamic Pile Testing-On Land-Restrike

Restrike is applying hammer blows to the pile head after a prescribed time period to determine the pile resistance at the specified time period. Apply no more than five (5) hammer blows during restrike after the specified time period has elapsed. The cost of any re-drive dynamic testing performed immediately after restrike is incidental to the restrike. On land refers to the end bents were the piles can be accessed from land.

6.0 PAYMENT

Payment will be made under:

BID ITEM CODE	ITEM	UNIT
23233EC	DYNAMIC PILE TESTING - ON WATER – INITIAL	EACH
23233EC	DYNAMIC PILE TESTING - ON WATER – RESTRIKE	EACH
23233EC	DYNAMIC PILE TESTING - ON LAND - INITIAL	EACH
23233EC	DYNAMIC PILE TESTING - ON LAND - RESTRIKE	EACH

Contract No.: _____ Structure Name and/or No.: _____
Project: _____
_____ Pile Driving Contractor or Subcontractor: _____
County: _____ _____
(Piles driven by)

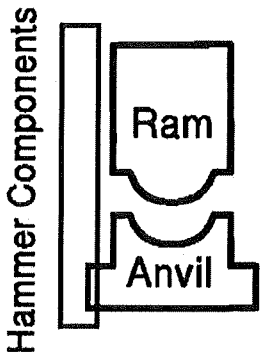

Hammer

Manufacturer: _____ Model No.: _____
Hammer Type: _____ Serial No.: _____
Manufacturers Maximum Rated Energy: _____ (ft-lbs)
Stroke at Maximum Rated Energy: _____ (ft)
Range in Operating Energy: _____ to _____ (ft-lbs)
Range in Operating Stroke: _____ to _____ (ft)
Ram Weight: _____ (lbs)
Modifications: _____
_____
_____

Striker Plate

Weight: _____ (lbs) Diameter: _____ (in)
Thickness: _____ (in)

Hammer Cushion

	Material #1	Material #2 (for Composite Cushion)
Name:	_____	_____
Area:	_____ (in^2)	_____ (in^2)
Thickness/Plate:	_____ (in)	_____ (in)
No. of Plates:	_____	_____

Total Thickness of Hammer Cushion: _____

Helmet (Drive Head)

Weight: _____ (lbs)

Pile Cushion

Material: _____
Area: _____ (in^2) Thickness/Sheet: _____ (in)
No. of Sheets: _____
Total Thickness of Pile Cushion: _____ (in)

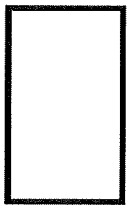

Pile

Pile Type: _____
Wall Thickness: _____ (in) Taper: _____
Cross Sectional Area: _____ (in^2) Weight/Meter: _____

Ordered Length: _____ (ft)
Design Load: _____ (kips)
Ultimate Pile Capacity: _____ (kips)

Description of Splice: _____
_____
Driving Shoe/Closure Plate Description: _____
_____
Submitted By: _____ Date: _____
Telephone No.: _____ Fax No.: _____

Figure 1

Pile and Driving Equipment Data Form (From FHWA-HI-097-014)

SPECIAL NOTE FOR STEEL PIPE PILES – FURNISH

This Special Provision shall apply to all steel pipe piling with a wall thickness greater than 1 inch. The Pile thickness shall be as indicated in the Contract Plans. It supplements information provided in Section 604 pertaining to "cast-in-place concrete piles", "cast-in-place piles", "cast-in-place pile shells", "steel pipe piles", "steel shells" or "pile shells", except as modified herein. Where a conflict exists between this Special Note and Section 604, the provisions herein shall govern.

Section references herein are to the Department's 2012 Standard Specifications for Road and Bridge Construction except as noted otherwise.

1.0 DESCRIPTION. This work consists of fabricating and furnishing steel pipe piles and test piles to their final length, including constrictor plates and pile shoes of the sizes required for installation and as shown on the Contract Plans. This includes performing all other incidental work as described herein and as measured in Section 8 of this Special Note. Within these provisions "final length" has the meaning defined in Section 8.

2.0 MATERIALS.

02.01 Steel Pipe Piles, including Test Piles. Conform to ASTM A 252, Grade 3.

The carbon equivalency in steel pipe piles shall not exceed 0.45 percent, using the following formula from AWS D1.1 to calculate the percent carbon equivalent:

$$CE = C + (Mn + Si)/6 + (Cr + Mo + V)/5 + (Ni + Cu)/15$$

Sulfur content in steel shall be limited to 0.05%.

02.02 Pile Shoes. Conform to ASTM A 148, Grade 90/60 or ASTM A694, Grade F60.

02.03 Constrictor Plate and Stiffeners. Conform to ASTM A 572, Grade 50.

Steel in constrictor plates and stiffeners shall satisfy the same carbon equivalency and sulfur content limitations as required for steel pipes in Section 2.01 of this Special Note.

02.04 Concrete. For pipe pile concrete infill see Special Note for STEEL PIPE PILES – INSTALL.

02.05 Steel Reinforcement. For reinforcing steel in concrete infill see Special Note for STEEL PIPE PILES – INSTALL.

3.0 EQUIPMENT.

03.01 Equipment for Driving. Installation is not part of this Special Provision.

Conform to Special Note for STEEL PIPE PILES - INSTALL in the Contract Documents.

4.0 FABRICATION.

04.01 Steel Pipe Piles. Fabrication of steel pipe piles, including dimensions and tolerances, shall conform to American Petroleum Institute Specification 2B (API 2B). Appendix A, Supplementary Requirements SR1 through SR4 shall not apply.

Spiral welded pipe with wall thickness greater than 1 in. shall not be permitted.

04.02 Pile Shoes. Pile shoe shall consist of cast steel or machined steel open-ended, inside flange cutting shoe of the size shown on the plans. Pile shoes shall have full contact with pile cross-section at the tip of the pipe to avoid stress concentration and possible damage to the pile during installation.

04.03 Constrictor Plate and Stiffeners. Conform to Section 607 and the Contract Plans.

04.04 Welding Procedure and Operator Qualifications. Conform to API 2B.

04.05 Shop Welding. Shop welding of steel pipe piling is defined as welding performed at the pipe manufacturer's facility. Shop welding of steel pipe piles shall conform to API 2B.

04.06 Field Welding. Field welding of steel pipe piling is defined as welding performed after the material has been transported from the pipe manufacturer's facility. Field welding of pipe splices (girth welds) shall conform to the requirements of API 2B and the following:

A. Girth welds shall be complete joint penetration welds conforming to AWS D1.1.

B. Welds shall be located at least 12 in. away from a skelp end weld.

C. Match marking of pipe ends at the manufacturing or fabrication facility is recommended for piling to ensure weld joint fit-up. Prior to positioning any 2 sections of steel pipe to be spliced by field welding, including those that have been match marked at the manufacturing or fabrication facility, the Contractor shall equalize the offsets of the pipe ends to be joined and match mark the pipe ends.

D. Welds made in the flat position or vertical position (where the longitudinal pipe axis is horizontal) shall be single-vee or double-vee groove welds. Welds made in the horizontal position (where the longitudinal pipe axis is vertical) shall be single-bevel groove welds. Joint fit-ups shall conform to the requirements in AWS D1.1, Section 5.22.3.1, "Girth Weld Alignment (Tubular)," and these special provisions.

E. For field welding limited to attaching backing rings and handling devices, the preheat and interpass temperature shall be in conformance with the requirements in AWS D1.1, Section 3.5, "Minimum Preheat and Interpass Temperature Requirements," and with AWS D1.1 Table 3.2, Category C.

F. The minimum preheat and interpass temperature for production splice welding and for making repairs shall be 150°F, regardless of the pipe pile wall thickness or steel grade. In the event welding is disrupted, preheating to 150°F must occur before welding is resumed.

G. Welds shall not be water quenched. Welds shall be allowed to cool unassisted to ambient temperature.

5.0 INSPECTION AND REPAIR. Mill test reports: Furnish notarized certified mill test reports to the Engineer and Department showing that all materials furnished conform to the specifications.

Inspection and repair of welds shall conform to API 2B except Subsection 7.3 shall be modified for field splices (girth welds) as follows:

25% of each girth weld shall be examined by radiographic or ultrasonic inspection in accordance with the requirements of Section 6, and Part E with Paragraph 6.12.3, and Part F with Paragraph 6.13.3.1, of AWS D1.1. The Engineer may select several locations on a given splice. The cover pass must be ground smooth at locations to be tested. If repairs are required in a portion of the tested weld:

1. Perform NDT on the repaired portion.
2. Perform additional NDT on untested areas on each side of the repaired portion. The length of additional NDT on each side of the repaired portion must equal 10 percent of the pipe's outside circumference.
3. After this additional 20 percent of NDT is performed, and if additional repairs are required, determine and document the total cumulative repair lengths from all NDT. If the cumulative weld repair length is equal to or more than 10 percent of the pipe's outside circumference, then perform NDT on the entire weld.

6.0 HANDLING. Working drawings shall be submitted to the Engineer before attaching handling devices to steel pipe piling. Welds used to attach handling devices to steel pipe piling shall be aligned parallel to the axis of the pile and shall conform to the requirements for field welding specified herein. Working drawings shall include locations, handling and fitting device details, and connection details. Attachments shall not be made to steel pipe piling until the working drawings are approved in writing by the Engineer. The Contractor shall allow the Engineer 14 days for review.

7.0 SUBMITTALS. Conform to Subsection 607.03.01. The following submittals are required:

1. Pile fabrication details
2. Pile fabrication section lengths

3. Pile field splice details and procedures
4. Constrictor plate fabrication details
5. Pile shoe fabrication details
6. Schedule for fabrication and delivery
7. Repair procedures for any fabrication defects

8.0 MEASUREMENT.

08.01 Steel Pipe Piles - Furnish. Quantity for Furnishing Steel Pipe Piles will be measured per linear foot. Payment for the furnished piles does not include pile shoes, constrictor plates, concrete fill or reinforcement for concrete fill, but payment shall include splices and all incidental material and labor necessary to install the piles to their final length. "Final length" is defined as the distance between the pile cutoff elevation indicated on the plans and the final tip elevation after installation.

08.02 Test Piles Steel Pipe - Furnish. Quantity for Furnishing Steel Pipe Test Piles will be measured per linear foot as the distance between PILE CUTOFF ELEVATION and ESTIMATED POINT OF PILE ELEVATION shown in the Contract Plans plus 20 feet. Payment for the furnished piles does not include pile shoes, constrictor plates, concrete fill or reinforcement for concrete fill, but payment shall include splices and all incidental material and labor necessary to install the piles to their final tip elevation after installation.

08.03 Pile Shoes for Steel Pipe Pile. Payment for pile shoes shall be at the contract unit price per each individual unit and shall include all material, labor and incidentals to fabricate, furnish and attach the shoes to the pile ends prior to driving.

08.04 Constrictor Plates for Steel Pipe Pile. Payment for constrictor plate shall be at the contract unit price per each individual unit and shall include all material, labor and incidentals to fabricate, furnish and attach the constrictor plates to the piles prior to driving.

9.0 PAYMENT. The Department will make payment for the completed and accepted quantities under the following:

Code	Pay Item	Pay Unit
24618EC	PIPE PILES (FURNISH – 72 IN - 2 IN)	LF
24618EC	PIPE PILES (FURNISH – 30 IN – 1.25 IN)	LF
8033	TEST PILES (FURNISH – 72 IN PIPE - 2 IN)	LF
8033	TEST PILES (FURNISH – 30 IN PIPE - 1.25 IN)	LF
24627EC	OPEN END INSIDE FIT CUTTING SHOE (72 IN - 2 IN)	EACH
24627EC	OPEN END INSIDE FIT CUTTING SHOE (30 IN – 1.25 IN)	EACH
24628EC	PILE CONSTRICTOR PLATE (72 IN - 2 IN)	EACH

SPECIAL NOTE FOR STEEL PIPE PILES-INSTALL - DRAFT

Marshall/Trigg Counties Item No. 1-180.70

Kentucky Lake Bridge

1.0 SCOPE OF WORK

The following sections provide the requirements for driven pipe pile installation, schedule requirements for submittals, and Contractor/Department Responsibilities.

1.1 Driven Pipe Pile Installation Objectives and Qualifications

The scope of work includes furnishing all labor, driving equipment, ancillary equipment necessary, templates and analyses associated with installation of driven steel pipe piles as specified in this Special Note and in general accordance with Section 604 of the Standard Specifications, except as modified by this special note. Driven pile installation includes installing 30-inch outside diameter, open-ended steel pipe piles with driving shoes at the end bent locations and installing 72-inch outside diameter, open-ended steel pipe piles with driving shoes and internal steel constrictor plates at the approach span pier and main span pier locations per the plans, project specifications and this special note. Refer to the Special Note for Steel Pipe Piling and the Special Note for Dynamic Pile Testing for additional information regarding the manufacture/fabrication of the piles and the testing of the pipe piles.

For the purposes of this Special Note, “Department” refers to the Kentucky Department of Highways and/or consultants acting on behalf of the Department of Highways. Engineer is defined in Section 101.03 of the Standard Specifications.

1.1.1 Bridge Pier Contractor’s Qualifications

1.1.1.1 Qualifications of Bridge Pier Contractor: Submit qualifications demonstrating that the Contractor has at least five (5) years experience in heavy marine construction, and at least three (3) projects in a marine environment using pipe piles of at least 48-inch diameter and driven greater than 60 feet in penetration.

1.1.1.2 Supervisor of pipe pile installation: Submit qualifications showing that the Supervisor of the pipe pile installation has at least five (5) years experience within the last ten (10) years in marine pile driving environment and at least three (3) projects

driving pipe piles 48-inches or larger in diameter and driven greater than 60 feet in penetration. Some or all of the experience may be with a different contractor.

1.1.1.3 Employ an independent testing agency for Dynamic Pile Testing. Submit qualifications of the testing agency and personnel per the Special Note for Dynamic Pile Testing.

1.1.1.4 Employ a Professional Land Surveyor and/or Professional Engineer licensed in the State of Kentucky with at least three (3) years experience in project survey control for projects of similar type and complexity, including preconstruction layout of bridge foundations and determining as-built locations and elevations of driven piles.

1.1.2 End Bent Construction Qualifications

1.1.2.1 Qualifications of End Bent Contractor: Submit qualifications showing that the Contractor has had at least three (3) years experience pile driving construction, and at least two (2) projects where pipe piles of at least 18-inch diameter and driven greater than 30 feet in penetration.

1.1.2.2 Supervisor of end bent pipe pile installation: Submit qualifications showing that the Supervisor of the end bent, open-ended, pipe piles has at least five (5) years experience with pile driving and at least two (2) projects driving pipe piles 18-inches or larger in diameter and driven greater than 30 feet in penetration. Some or all of the experience may be with a different contractor.

1.1.2.3 Employ an independent testing agency for Dynamic Pile Testing. Submit qualifications of the testing agency and personnel per the Special Note for Dynamic Pile Testing.

1.1.2.4 Employ a Professional Land Surveyor and/or Professional Engineer licensed in the State of Kentucky with at least three (3) years experience in project survey control for projects of similar type and complexity, including preconstruction layout of

bridge foundations and determining as-built locations and elevations of driven piles.

1.1.3 Install 72-inch outside diameter, open-ended, pipe piles to the specified driving criteria at the locations and depths specified in the contract documents. Refer to the Subsurface Data Sheets and additional geotechnical information posted on the Division of Construction Procurement's website for the anticipated materials that the piles will be driven through.

1.1.4 Install 30-inch outside diameter, open-ended pipe piles to the specified driving criteria at the locations and estimated depths specified in the contract documents Refer to the Subsurface Data Sheets and additional geotechnical information posted on the Division of Construction Procurement's website for the anticipated materials that the piles will be driven through.

1.1.5 Perform and submit wave equation analyses for one (1) pipe pile at each end bent location and one (1) pipe pile of each diameter within the station ranges indicated below using the representative pier, as defined below, for each driving hammer and system proposed for use. Perform analyses to demonstrate that the pile hammer has sufficient energy to install the piles to the design tip elevation and required nominal resistances at the end of driving (EOD) and beginning of restrike (BOR) without overstressing or damaging the piles. Dynamic testing results will determine the driving criteria and control the final pile tip elevation.

Pier or End Bent Group	Representative Pier or End Bent for Wave Equation Analyses
End Bent 1	End Bent 1
Pier 1	Pier 1
Piers 2 and 3	Pier 3
Pier 4	Pier 4
Pier 5	Pier 5
Pier 6	Pier 6
Piers 7 and 8	Pier 8
Pier 9	Pier 9
End Bent 2	End Bent 2

1.1.6 Subcontract an independent pile testing firm to perform dynamic monitoring on the test piles. Provide the subcontractor necessary assistance including, but not limited to, crane assistance and safety equipment, and safe access to the top of the piles prior to pile driving to facilitate installation and/or repair of the instruments. Refer to the Special Note for Dynamic Pile Testing for additional details. The test piles will also serve as production piles, once the test piles are accepted.

1.1.7 Perform layout, elevation and location survey control, provide templates and support spuds, and measurement and marking in general accordance with the requirements of Standard Specification Section 201.

1.1.8 Provide and perform all field and shop pile splicing per Special Note for Steel Pipe Piling.

1.1.9 Perform 72-hour (+/- 6 hour) restrikes on each test pile indicated on the plans. Perform restrikes on additional test piles and/or production piles as selected by the Department. The Department will determine the need of additional restrikes based on results of the initial restrikes. The Department will pay for additional restrikes based upon the applicable established unit prices for restrikes.

1.1.10 Perform 168 hour (maximum 192 hours) restrikes on at least one test pile per substructure, unless additional restrikes are indicated on the plans. Perform restrikes on additional test piles and/or production piles as selected by the Department. The Department will determine the need of additional restrikes based on results of the initial restrikes.

1.1.11 Furnish and place reinforcing steel in the pipe piles to connect with the pile caps and fill the pipe piles with concrete as shown on the contract documents.

1.1.12 After completing the pipe pile cut-offs, all unused excess materials become the property and responsibility of the Contractor to legally dispose of off-site at no additional cost to the Department.

1.2 Pre-Activity Meeting

A pre-activity meeting to cover the activities in the Special Note for Driven Pipe Pile Installation and Special Note for Dynamic Pile Testing will be scheduled and shall occur after all the submittal items in Sections 1.3 and 2.1 have been

submitted and accepted by the Department and not later than three (3) weeks prior to commencement of pile driving testing and construction activities. As a minimum, this meeting shall be attended by representatives of the Prime Contractor and Pile Driving Sub-Contractor(s) (if applicable) including the pile driving supervisor(s), Department District personnel as designated by the Branch Manager for Project Delivery and Preservation, Central Office Construction, Geotechnical Branch, and applicable Department Consultants. No pile construction or testing activity shall be performed until the contractor's final submittals have been approved as having satisfactorily resolved all review comments and the pre-activity meeting has been held.

1.3 Materials

1.3.1 Steel Pipe Piles

Conform to Special Note for Steel Pipe Piles-Furnish and contract drawings and specifications.

1.3.2 Driving shoes

Fit each steel pipe pile with a driving shoe. Conform to Special Note for Steel Pipe Piles-Furnish.

1.3.3 Constrictor Plate and Stiffeners

Pipe piles at the pier substructure locations will contain steel constrictor plates and stiffeners installed on the interior of the pipe piles as indicated in the project plans.

1.3.4 Field Splices

Conform to Special Note for Steel Pipe Piles-Furnish.

1.3.5 Concrete

Class A, Mod (Pipe Pile Infill) – Provide Class A Modified Concrete conforming to contract drawings and Standard Specifications.

1.3.6 Reinforcing Steel

Conform to contract drawings and Standard Specifications.

1.4 Pile Driving Equipment

1.4.1 General - Acceptance of Driving System: Furnish all pile driving equipment (including the hammer, hammer cushion, drive head, pile cushion, and other appurtenances to be furnished by the Contractor) and submit for acceptance by the Department per the Special Note for Dynamic Pile Testing. Obtain acceptance prior to mobilizing the hammer(s) and the beginning the pile driving.

Submit calculations based on wave equation analyses demonstrating that the piles can be driven to the required length and required nominal resistances at the end of driving (EOD) and beginning of restrike (BOR) using the selected driving system without damage to the piles.

For the driving equipment to be accepted, the maximum compressive driving stress is 90 percent of the yield stress (0.9 fy) of the pile.

During pile driving operations, use the accepted driving system. No changes in the driving system or equipment will be allowed unless the Contractor has submitted revised pile driving equipment data and wave equation analyses for the corresponding driving criteria and pile stresses and the Department has accepted the revised submittal.

The Department's acceptance of the pile driving equipment does not relieve the Contractor of its responsibility to drive the piles, free of damage, as specified in this Special Note and/or other applicable contract documents**.**

1.4.2 Hammers:

1.4.2.1 Drive the 72-inch outside diameter steel pipe piles with hammer(s) having a rated energy of at least 589,000 ft-lbs and conforming to this Special Note and the Special Note for Dynamic Pile Testing. Select the hammer(s) to suit the conditions expected to be encountered. If the selected hammer(s) used is(are) found to be unsatisfactory in the field, replace it with a different hammer of the same type or an alternate hammer type, as accepted by the Department. Use

the same hammer(s) to drive the test piles and the production piles at each pier.

1.4.2.2 Drive the 30-inch outside diameter steel pipe piles with hammer(s) having a rated energy of at least 60,000 ft-lbs and conforming to this Special Note and the Special Note for Dynamic Pile Testing. Select the hammer(s) to suit the conditions expected to be encountered. If the selected hammer(s) used is found to be unsatisfactory in the field, replace it with a different hammer of the same type or an alternate hammer type, as accepted by the Department. Use the same hammer(s) to drive the test piles and the production piles at each end bent.

1.4.2.3 The Contractor may use a vibratory hammer to initially install the top section of the piles at the piers, only if the proposed equipment and procedures are submitted in writing and accepted by the Department in writing. Do not use a vibratory hammer to advance the pile tip below a depth of 50 feet below the encountered mudline.

1.4.2.4 The Contractor may use a vibratory hammer to initially install the top section of the piles at the end bents, only if the proposed equipment and procedures are submitted in writing and accepted by the Department in writing. Do not use a vibratory hammer to advance the pile tip below Elevation 310 feet.

1.4.3 Hammer Cushions - Equip all impact driving equipment, where required, with a cushion of suitable material thickness to prevent damage to the pile or hammer and to ensure uniform driving behavior. Provide hammer cushions made of durable manufactured materials which will retain uniform properties during driving. Wood, wire rope, and asbestos hammer cushions will not be permitted. Place a striker plate on the hammer cushion to ensure uniform compression of the cushion material. The Department may inspect the hammer cushion prior to beginning pile driving and after each 100 hours of pile driving. Replace the hammer cushion when the thickness is less than 75 percent of the original cushion thickness. Include appropriate cushion material and thickness in the wave equation analyses.

1.4.4 Helmets – Fit piles driven with impact hammers with an adequate helmet to uniformly distribute the hammer energy to the pile head. Align the helmet axially with the hammer and pile. Fit the helmet around the pile in such a manner to prevent transfer of torsional forces during driving, while maintaining proper alignment of the hammer and pile. Cut off the pile square, and a provide the helmet to hold the pile in line with the axis of the hammer. Locate the helmet plane and perpendicular to the longitudinal axis of the pile to prevent eccentric impacts from the drive head.

1.4.5 Pile Cushion – Provide pile cushion, where required, with dimensions such that the hammer energy is uniformly distributed to the pile head, when a pile cushion is required. Include appropriate cushion material and thickness in the wave equation analyses.

2.0 CONSTRUCTION

2.1 Submittals: Refer to the Summary of the October 22, 2013, Contractor Information Meeting for information regarding the submittal, review, and acceptance process. The following submittals apply to the installation of pipe piles for review and acceptance by the Department 60 calendar days prior to start of the pile installation, unless the submittal date is specifically addressed in a different Special Note. Conform to all submittal requirements of the Contract, including submitting the information specified herein:

2.1.1 Bridge Pier Construction Qualifications – Refer to Section 1.1.1

2.1.2 End Bent Construction Qualifications – Refer to Section 1.1.2

2.1.3 Sequence of Operations: Submit a Sequence of Operations Plan, showing the order and sequence for each pile installation, for review and acceptance by the Department prior to driving piles. Prepare the Sequence of Operations Plan to minimize impacts to adjacent construction and the existing bridge. Conform the Sequence of Operation Plan to the requirements in the contract plans and specifications and the Special Notes.

2.1.4 Shop Drawings: Submit shop drawings showing pipe pile sizes, drive shoe details, joint or splice details, welding, pick up points, and other items pertinent to the pile design and handling.

2.1.5 Pile Installation Equipment and Methods:

Items to be submitted as part of this section:

2.1.5.1 The manufacturer's literature, including technical and performance literature for the pile driving hammer, the cushions, and other equipment for pile driving.

2.1.5.2 The details of the monitoring system for determination of the elevation of the pile tip during and after driving.

2.1.5.3 The details of equipment and procedures for clearing obstructions encountered during pipe pile installation such as drilling, jetting, augering, or excavation.

2.1.5.4 Provide a project hazard analysis for the pile driving operations that will be incorporated into the project safety plan that will be submitted by the Contractor.

2.1.6 Pile Design:

Items to be submitted as part of this section:

2.1.6.1 See Special Note for Steel Pipe Piles-Furnish for a list of required submittals regarding pipe pile manufacturing and materials.

2.1.6.2 Qualifications and experience of the Contractor's Licensed Professional Engineer performing the wave equation analyses conforming to the qualifications and experience outlined in the Special Note for Dynamic Pile Testing.

2.1.6.3 The results of calculations using wave equation analyses of piles performed by a Professional Engineer, per the Special Note for Dynamic Pile Testing, that demonstrate that the equipment, cushions and cap are capable of installing the pipe piles without damage to the pile due to driving stresses. See Special Note for Dynamic Pile Testing for further details and requirements.

2.1.6.4 Settlement monitoring at the End Bents is part of the Advance Contract. This data is critical for determining when the end bent

piles can be driven. Drive End Bent piles once telltale settlement readings are less than 1/8 inch (0.01 feet) over a four week period. The Department will respond regarding the driving of the end bent piles within five calendar days after reviewing the data presented from the Advance Contract.

2.1.7. Site Plan and Pile Location Data:

2.1.7.1 Submit a Site Plan including the method to access the site (barge access, timber cribbing, any trestles, etc.), the proposed equipment laydown area, the method to secure the area from unauthorized access, the method of providing temporary support of the equipment, and methods of erosion control as required per the contract plans and specifications. The plan will be subject to the review and written acceptance of the United States Coast Guard (USCG) and the United States Army Corps of Engineers (USACE) and other applicable governmental agencies. Comply with the stipulations established by the applicable governmental agencies as included in their permits, included in the contract documents. Comply with all stipulations the governing and the permitting agencies may have regarding access to the site prior to making their submittal. If requested by the permitting agencies following review of the Contractor's plan, modify the proposed submittal and methods at no additional cost to the Department. The Department will not be liable for any delay as a result of rejection of the Contractor's submittal by the permitting agencies.

2.1.7.2 Within ten (10) days after the completion of all pile driving at each pier or end bent location including all restrikes, submit to the Department a final as-driven pile location drawing, certified by a Kentucky Licensed Professional Land Surveyor and/or Engineer. The plan shall be to scale and include the following:

2.1.7.2.1 North arrow and graphical scale.

2.1.7.2.2 Identify each pile by a separate number consistent with the Contract Documents.

2.1.7.2.3 The elevation of each pile top to the nearest one-tenth (0.1) foot prior to and after cutting it off.

2.1.7.2.4 Deviation in feet, to the nearest one-tenth (0.1) foot, of the axial center of the pile at cutoff elevation from the design location and coordinates of the final location of the axial center of the pile at cutoff elevation.

2.1.7.2.5 The elevation to the nearest one-tenth (0.1) foot of the pile tip to the top of the internal steel restrictor plate after final driving.

2.1.7.2.6 The deviation, to the nearest ¼-inch per foot, of the pile axis from vertical.

2.1.8 Pile Lengths and Order Lists:

2.1.8.1 Furnish all piles in accordance with the Contract Documents and the Contractor's accepted submittals.

2.2 Pipe Pile Installation

2.2.1 Driving Criteria for the Pipe Piles: Unless directed otherwise by the Engineer, drive the piles on which dynamic testing is performed to the following installation criteria, whichever occurs first:

2.2.1.1 The End of Driving (EOD) Resistance is 75% of the Required Nominal Axial Resistance (RNAR). This assumes a setup factor (SF) of 1.33 (= 100% / 75%). This setup factor may be adjusted based on the actual setup observed as testing proceeds.

2.2.1.2 Driving stresses exceed 45 ksi (90% of 50 ksi yield stress) or 40.5 ksi (90% of 45 ksi yield stress).

2.2.1.3 A set of 0.1 inch/blow (i.e. a blow count of 10 blows per inch) is obtained for a sustained length of pile penetration and the pile is driven to at least the highest allowable pile tip elevation indicated on the project plans.

2.2.1.4 Prior to driving test piles, drive at least one production pile at Pier 4 or 5 to at least the highest allowable pile tip elevation and

perform dynamic pile testing on the selected pile. Select a pile that has not been designated as a test pile. The purpose will be to help the contractor select power settings on the hammer to maintain blow counts of at least 36 blows per foot while not exceeding the specified driving stresses and to familiarize the contractor and independent testing agency with the selected pile driving system. Perform signal matching on a selected hammer blow at or near the end of drive to help determine dynamic testing parameters to estimate the axial pile resistance during dynamic testing of the selected test piles. The Department will pay for the dynamic pile testing per the applicable unit bid price and the pile driving per the applicable pile install unit bid price.

2.2.1.5 Upon completion of the test pile driving and submission of the dynamic testing reports for end of drive and beginning of restrike, the Engineer will provide driving criteria for the remaining production piles within three calendar days of submitting the dynamic testing results.

2.2.2. Inspection of Pipe Piles: Provide access using man- lifts, crane-lifts, or other equipment as may be required or requested, for the Department to regularly inspect the interior of the pipe piles during driving, for observing any damage to the pipe and to measure the elevation of the soil plug and water surface inside the pile. No pipe pile will be accepted unless inspected and accepted by the Department.

2.2.3. Prepare a written Quality Control Plan for Pile Installation. Submit the plan to the Department for review and acceptance. Perform all work in the this section in accordance with the accepted Quality Control Plan for the Pile Installaiton.

2.2.4. Sequence: Drive all test piles at a pier or end bent, as specified on the plans, including the restrikes, until accepted by the Department before any of the production piles at that pier or end bent are driven below 30 feet above the plan tip elevation. Restrike indicated test piles at 72 hours and 168 hours following the end of the initial driving. The Department will provide the recommended production pile driving criteria based upon the dynamic pile testing results within 3 working days of receiving the dynamic pile testing report at each substructure.

After the test piles at a pier or end bent are driven initially and before the restrike, the Contractor may continue driving the remaining production piles at the same substructure to a depth no deeper than 30 feet above the plan tip elevation. Drive the remaining production piles by driving those located nearest the existing bridge first and in a sequence so as to minimize the impacts on the existing bridge foundations and to reduce the potential effects of densification on the installation of the rest of the piles within a pier.

Perform a 72-hour restrike on all test piles after the end of the initial driving and any production piles selected by the Department. At each pier and end bent location, restrike at seven days up to two production piles, if selected by the Department.

2.2.5. Cleanout: After final driving and restrike, clean out the pipe removing materials above the constrictor plate insert shown on the Contract Drawings. Use methods as needed and appropriate, including but not limited to excavating, augering, chiseling, air-lifting or jetting to remove the materials encountered, which do not result in damage to the driven pipe pile.

At all times during excavation, maintain the water or drill fluid level inside the pipe no more than 5 feet below the surrounding lake level including during fluctuations resulting from operation of the dam. Do not dewater the interior of the pipe pile without prior acceptance by the Department.

In no case remove any materials below the constrictor plate.

Remove soil from the interior of the pipe pile to create a level soil surface at the top of the stiffeners associated with the constrictor plate insert to be left in place. Remove all loose silt, clay, sand, gravel and all other soil materials above the top of the constrictor plate stiffeners, and all soft material, leaving not more than a maximum of 3-inches of soft material above the stiffeners after cleanout, unless otherwise accepted by the Department.

2.2.6 Determination of pile resistance:

Evaluate the nominal resistance of each test pile using dynamic pile testing as described in the Special Note for Dynamic Pile Testing.

2.2.7 Preparation for Driving:

2.2.7.1. Layout and Elevation and Location Control: Layout all pile locations. Establish a benchmark at each of the proposed driving locations on an object that is not influenced by surrounding lake levels to the nearest 0.1-foot, and is referenced to the project elevation datum and visible above maximum anticipated surrounding lake level.

Verify the tip elevation of driven piles to the nearest 0.1-foot relative to the project elevation datum. Confirm each pile tip elevation prior to and following pile restrike, and as required by the Engineer.

2.2.7.2. Templates: Pile driving templates are deemed temporary works and are incidental to the construction of the permanent works. Include templates in the work as necessary to align and maintain the piles at their proper location and alignment. Adjust the elevation of the template relative to the mudline elevation to prevent the tip of the piles from moving (i.e. “walking”) from their planned location. Securely fix the templates using temporary spud piles and/or other appropriate bracing and supports at the option of the Contractor. Situate the template configurations and spud piles so as not to injure or displace driven piles nor interfere with pile driving or other portions of the work. Maintain the templates in place after initial driving and until restriking has been completed. Dismantle and remove the templates and temporary bracing, supports and spud piles in a manner so as not to damage, or misalign completed piling. Templates, bracing, supports, and spud piles remain the property of the Contractor. Repair any damage to the pipe piles as a result of the construction and removal of templates, bracing, supports, and spud piles at no additional cost to the Department.

2.2.7.3 Measurement and Marking of Piles: Clearly and accurately mark all piles prior to installation at 1-foot vertical intervals and

marked numerically at 5 feet vertical intervals starting at the pile tip.

Notify the Department of the total measured length of each pile and allow the Department to verify the length and accept the pile marking prior to the start of driving.

During driving, provide a graduated gauge 24 inches in length, with 1-inch increments clearly marked, and that is used as part of an elevation monitoring system situated at template level to allow verification of the final driving resistance for each pile driven. Secure and reference the monitoring system to an object that is not influenced by changes in surrounding lake levels.

2.2.8 Driving Piles:

2.2.8.1 Test Pile Driving Records: For each test pile driven, keep records of the number of blows for each foot of penetration for the entire pile and the penetration under the final series of blows (pile set over the last 10 hammer blows). Include the type and size of hammer used, rate of hammer operation and stroke, type and dimensions of driving helmet and cushion block in the records. Include the date, starting time, total driving time, pile location and identification number, pile type and size, “ground” or “mudline” elevation from which the pile is driven, elevation of soil within the interior of the pile above the constrictor plate, and final elevation of the pile tip and butt in the records. Indicate the elevation to which soil or interior of pipe pile was removed prior to concrete placement, volume and elevations of concrete, and pipe pile fill that was placed in the pile. Provide a copy of the records to the Engineer at the conclusion of each day’s driving.

2.2.8.2 Production Pile Driving Records: Keep records for each production pile driven of the number of blows for each foot of penetration for approximately the last 10 feet of pile length (estimated upon the test pile driving results) and the penetration under the final series of blows to confirm the the end of driving (EOD) criteria (pile set over the last 10 hammer

blows). Include the type and size of hammer used, rate of hammer operation and stroke, type and dimensions of driving helmet and cushion block in the records. Include the date, starting time, total driving time, pile location and identification number, pile type and size, "ground" or "mudline" elevation from which the pile is driven, elevation of soil within the interior of the pile above the constrictor plate, and final elevation of the pile tip and butt in the records. Indicate the elevation to which soil or interior of pipe pile was removed prior to concrete placement, volume and elevations of concrete, and pipe pile fill that was placed in the pile. Provide a copy of the records to the Engineer at the conclusion of each day's driving.

2.2.8.3 Driven Pile Location and Alignment Tolerances: Drive all piles at the locations and alignments shown on the Contract Drawings unless otherwise directed or accepted in writing by the Engineer. Drive piles to within an axial tolerance not to exceed 1/4-inch per foot variation from the vertical. Drive the piles such that the final position of the axial center of driven foundation piles, measured in the plane of the cut-off elevation, does not deviate from the design location by more than 6 inches. Do not manipulate the piles after driving in order to force them into a tolerable position.

Perform accepted corrective action(s), as may be required, including replacement of misaligned piles and/or furnishing materials at no additional cost to the Department. Remove, or, if space allows and as allowed by the Engineer, cut off the misaligned piles and then redrive or replace misaligned piles to the satisfaction of the Engineer.

2.2.8.4 Pile Heave and Restriking: Determine the elevation of the top of each pile immediately after driving and re-striking and again after completion of the driving of all piles in the group. Redrive any pile, by either the restrike criteria or to the original tip elevation, whichever is the greater distance, which has heaved more than 0.5-inch. Restrike the piles in accordance with these Special Notes.

2.2.9 Defective, Damaged or Broken Piles:

Do not subject the piles to excessive or undue injury or stresses or to splitting or excessive deformation driving as a result of the driving operations and procedures. Correct any defective, damaged, or broken pile(s) by one of the following methods as accepted by the Engineer:

2.2.9.1 Withdraw the pile and replace with a new, and if necessary, longer pile; or

2.2.9.2 Cut off the defective or damaged pile at an elevation accepted by the Engineer, and splice another section to provide the required final elevation.

2.2.9.3 Perform any and all such remedial materials and work at no additional expense to the Department.

2.2.10 Pile Cut-offs:

2.2.10.1 Do not cut off piles until all piles within a group have been checked for heave and until all required restriking has been completed to the satisfaction of the Engineer. Redrive any piles exhibiting heave of 0.5-inches or more to the required resistance or original tip elevation, whichever is deeper.

2.2.10.2 Unless otherwise specified, cut off all piles perpendicular to the longitudinal axis of the pile at the elevations specified on the Contract Drawings.

2.2.10.3 The cut-offs may be used in splicing or building up other piles as required until all pipe pile driving is complete. Upon completion of the work, all unused or excess materials become the property of the Contractor to be legally disposed of off-site.

3.0 METHOD OF MEASUREMENT

3.1 PIPE PILE (72-INCH DIAMETER and 30-INCH DIAMETER) – INSTALL will be measured for payment to the nearest “Linear Foot” of pile, calculated from the measured mudline to the as-driven tip elevation at pier locations or to the bottom of pile cap elevation at the end bents, inspected and accepted in accordance with

the Contract Documents and/or as directed by the Engineer. Pile length from cut-off to mudline will not be measured or paid for installation. The mudline varies at the pier locations and will be defined as the mudline at each pile location which will be reported to the Engineer as measured by the Contractor in the presence of the Engineer.

3.2 PIPE PILE (30-INCH DIAMETER) – INSTALL will be measured for payment to the nearest “Linear Foot” of pile, calculated from the bottom of pile cap elevation to the as-driven tip elevation at the end bents, inspected and accepted in accordance with the Contract Documents and/or as directed by the Engineer. Pile length from cut-off to bottom of pile cap will not be measured or paid for installation.

4.0 PAYMENT

Payment will be made under:

BID ITEM CODE	ITEM	UNIT
24618EC	PILES – (INSTALL - 30 IN PIPE -1 IN)	LF
24618EC	PILES – (INSTALL - 72 IN PIPE – 2 IN)	LF
08033	TEST PILES (INSTALL - 30 IN PIPE -1 IN)	LF
08033	TEST PILES (INSTALL - 72 IN PIPE - 2 IN)	LF

SPECIAL NOTE FOR VIBRATION MONITORING

Marshall/Trigg Counties Item No. 1-180.70
Kentucky Lake Bridge

Vibration-producing activities (such as pile driving, or operation of heavy construction equipment) will be required during the construction and testing activities related to the Kentucky Lake bridge construction. The Contractor is advised that existing bridge structures are located close to the proposed work and that construction activities shall be conducted so as to preclude damage to same. The Contractor shall be responsible for any damage caused by his activities.

Within 30 days after receiving a Notice To Begin Work, submit a written plan to the Engineer, which includes, but is not limited to the following: vibration monitoring plan (including the format for reporting the vibration readings), anticipated vibration levels at the closest structures, condition survey format, and communications activities. Submit a copy of all final reports to the Engineer within 14 days after completing the Condition Survey and Vibration Monitoring field activities. Refer to the Summary of the October 22, 2013 Contractor Information Meeting for information regarding the submittal, review and acceptance process.

1. Condition Survey

Conduct a Pre-Construction Condition Survey (PCS) on the existing Eggner Ferry Bridge Spans A through F Piers, prior to the commencement of any vibration-producing activity. Include documentation of the Piers as viewed from the waterline. Detail (by engineering sketches, video, photographs, and/or notes) any existing structural or cosmetic damage. The survey will be conducted by a licensed Professional Engineer with at least 4 years of experience in pre-construction condition surveys, and who has conducted a minimum of 4 pre-construction survey projects on transportation facilities.

Submit a Pre-Construction Condition Survey report that summarizes the pre-construction condition of the structure(s) and identifies areas of concern, including potential personnel hazards (falling debris) and structural elements that may require support or repair such as, but not limited to, existing visible cracks.

Install crack displacement monitoring gages as appropriate across any significant existing cracks as defined by the Pre-Construction Condition Survey (PCS) engineer to help verify any additional structure distress if it should develop. The appropriate location, number, and type of gages will be established by the Contractor and/or the Department. Read the gages prior to vibration-producing activities, as well as during these activities. Obtain data on a weekly basis for as long as vibration-producing activities are being conducted. Submit a brief weekly report that confirms the data was obtained. Submit a final summary report which summarizes the data obtained on a weekly basis. Alert the Department if any significant movement as defined by the PCS engineer is detected by the monitoring gages.

Conduct a Post-Construction Condition Survey within 10 calendar days after the pile-driving activities for the bridge construction have been completed. The survey will follow the same procedures, and the report will have the same format, as the Pre-Construction Survey.

2. Vibration Controls

Employ a qualified vibration specialist to establish a Safe Vibration Level for the existing Eggner Ferry Bridge Spans A through F piers. The Contractor's vibration-monitoring personnel shall include a qualified Vibration Instrumentation Engineer who is a licensed Professional Engineer,

and who has at least 4 years of experience in the installation and use of vibration-monitoring instrumentation and in interpreting instrumentation data for ground vibrations caused by heavy construction, and who has conducted a minimum of 5 vibration monitoring projects for ground vibrations caused by heavy construction. This specialist shall also supervise the Contractor's vibration-monitoring program. During all vibration-producing activities, monitor vibration levels at Spans A through F piers, and shall not exceed the Safe Vibration Level established in the Contractor's Vibration Monitoring Plan to preclude damage to these structures.

Submit a Vibration Monitoring Plan which shows the planned locations of the vibration monitors, vibration monitoring equipment to be used, safe vibration levels (which may be established from a baseline monitoring program), and the expected schedule for monitoring to the Department for acceptance.

Provide vibration monitoring equipment capable of continuously recording the peak particle velocity, recording and transmitting a permanent record of the entire vibration event, and transmitting alarms when threshold values are exceeded. Provide vibration monitoring equipment with the following minimum features:

2.1. Seismic range: 0.01 to 4 inches per second with an accuracy of +5 percent of the measured peak particle velocity or better at frequencies between 10 Hertz and 100 Hertz, and with a resolution of 0.01 inches per second or less.
2.2. Frequency response (+3 dB points): 2 to 200 Hertz.
2.3. Three channels for simultaneous time-domain monitoring of vibration velocities in digital format on three perpendicular axes.
2.4. Two power sources: internal rechargeable battery and charger and backup power source.
2.5. Capable of internal, dynamic calibration.
2.6. Capability to transfer data from memory to permanent digital storage. Instruments must be capable of transmitting vibration data readings to the Contractor within 15 minutes of obtaining the readings. Provide computer software to perform analysis and produce reports of continuous monitoring.
2.7. Continuous monitoring mode must be capable of recording single-component peak particle velocities, and frequency of peaks with an interval of one minute or less.

Submit a brief report weekly that confirms vibration monitors are working and contains the highest vibration level (PPV) and frequency observed at each monitoring location, starting after the first vibration monitor is installed, and continuing until vibration monitoring is terminated. Submit a final report which summarizes the data collected on a weekly basis. Include copies of all vibration records and associated construction activity (pile driving) data in the final report, submitted to the Engineer, in a format approved by the Engineer, within 14 calendar days of completing vibration monitoring.

The Contractor's Vibration Instrumentation Engineer shall interpret the data collected, including making correlations between seismograph data and specific construction activities. Evaluate the data to determine whether the measured vibrations can be reasonably attributed to construction activities. Include these evaluations in the final report.

Unless otherwise provided for in the Vibration Monitoring Plan, the Response Values for vibration shall include a Threshold Value of 0.4 inches per second and a Limiting Value of 0.5 inches per second. The actions associated with these Response Values are defined below. Plans for such actions are referred to herein as plans of action, and actual actions to be

implemented are referred to herein as response actions. Response Values are subject to adjustment by the Engineer as indicated by prevailing conditions or circumstances.

If a Threshold Value is reached, take the following actions:

1. Immediately notify the Engineer.
2. Meet with the Engineer to discuss the need for response action(s).
3. If directed by the Engineer during the above meeting that a response action is needed, submit within 24 hours a detailed specific plan of action based as appropriate on the generalized plan of action submitted previously as part of the vibration-monitoring plan specified in Article 2.
4. If directed by the Engineer, implement response action(s) within 24 hours of submitting a detailed specific plan of action, so that the Limiting Value is not exceeded.

If a Limiting Value is reached, take the following actions:

1. Immediately notify the Engineer and suspend activities in the affected area, with the exception of those actions necessary to avoid exceeding the Limiting Value.
2. Meet with the Engineer to discuss the need for response action(s).
3. If directed by the Engineer during the above meeting that a response action is needed, submit within 24 hours a detailed specific plan of action based as appropriate on the generalized plan of action submitted previously as part of the vibration-monitoring plan specified in Article 2.
4. If directed by the Engineer, implement response action(s) within 24 hours of submitting a detailed specific plan of action, so that the Limiting Value is not exceeded.

3. Communications

Maintain a log of any complaints and make this available to the Engineer on request. Notify the Department at least 2 weeks prior to commencement of any vibration-producing activity that might affect the structure.

4. Measurement

Payment for Vibration Monitoring is for all work described in this special note including but not necessarily limited to surveys, instrumentation, monitoring, and reports.

5. Pay Items

Payment will be made under:

BID ITEM CODE	ITEM	UNIT
24550EC	VIBRATION MONITORING	LS

SPECIAL NOTE FOR STEEL ERECTION - ARCH SPAN

1.0 DESCRIPTION. This work shall consist of fabricating, furnishing and installing the arch span superstructure, including tied arch rib, tie girder, knuckle, hanger attachments, floor beams, stringers and bracing. (Note: This work does not cover fabrication and installation of the arch hanger system, which is covered under Special Note for Bridge Strand Hangers.)

Materials and workmanship shall be in accordance with the KYTC Standard Specifications for Road and Bridge Construction, 2012 Edition (KYTC); AASHTO/ AWS D1.5M/D1.5 "Bridge Welding Code"; AWS D1.1/D1.1M "Structural Welding Code – Steel"; the Contract Drawings; and this Special Note.

Where a conflict exists between this Special Note and KYTC Section 607, the provisions herein shall govern.

2.0 MATERIALS. Materials shall conform to the Contract Drawings and KYTC Section 607.

3.0 ERECTION ANALYSIS AND STABILITY.

3.1 Steel Erection Responsibility. The stability of the structure during erection, and the final geometry of the structure, is the responsibility of the Contractor. The Contractor shall retain an erection engineer for the purpose of evaluating the stability, state of stress and geometry of the structure during and after erection. The Contractor shall erect the bridge in a safe manner without over stressing the structural components during erection and shall leave the structure in a state of stress compatible with the design.

Structural steel shall be in conformance with KYTC Section 607. Steel erection shall be in conformance with the AASHTO/NSBA "Steel Bridge Erection Guide Specification", S10.1-2007.

3.2 Conceptual Erection Sequence. The assumed erection sequence, as described in the General Note "Arch Erection and Camber" in the Contract Drawings, is that the arch rib, tie, bracing and floor system is constructed on blocking in the "no-load condition" with four bearing support points. The blocking is assumed to be removed only after the superstructure steel is completely erected. This would require floating in of the completed steel superstructure for placement on top of Piers 4 and 5. The Contractor may choose and develop any sequence that can safely erect the bridge without overstress or damage to the structural steel. The design of any necessary shoring / falsework and its foundations is the responsibility of the contractor.

3.3 Arch Erection And Camber. In addition to the full analysis of the completed structure, load capacity and stability of the main span arch structure has been verified for the completely erected steel superstructure, prior to deck placement. The General Note "Arch Erection and Camber" details the assumed erection and deck pour sequence that is consistent with the camber diagrams shown on the Contract Drawings and the load

capacity of the fully-erected structure. No provision in either the camber or structural capacity of the members has been included for erection stresses.

The load capacity and stability verification of a partially completed arch span in the various stages of erection prior to installation of all steel members is the responsibility of the Contractor. The Contractor shall evaluate the partially completed structure in accordance with the same design provisions used for the permanent structure except as indicated herein. Wind buffeting loads for design are given on the Contract Drawings and are based on a project specific wind study and wind tunnel testing performed by RWDI and corresponds to a mean hourly wind speed of 69.6 mph at deck level. During construction, wind loads are predicted to correspond to a 10-year mean hourly velocity of 60.5 mph at the deck level. Therefore, the given buffeting loads can be proportioned accordingly and used for evaluating buffeting demands during construction.

No uplift at bearings shall be allowed in any construction phase.

3.4 Changes to the Structure. Any changes to the structural steel system shown in the Contract Plans require reanalysis for load capacity and stability for both construction and permanent load conditions, including seismic. Diaphragm action of the stay-in-place forms shall be neglected in all analyses.

Dead load deflection, camber and stringer haunch thickness are based on the erection and slab pouring sequences as described in the General Note "Arch Erection and Camber" and as shown in the plans. Any deviation from this sequence will need to be evaluated by the Contractor's engineer to determine the effect on camber, dead load deflection and structural member stresses. This evaluation must be submitted to the Engineer for review and approval by the Engineer of Record.

4.0 QUALIFICATIONS AND SUBMITTALS.

4.1 Erector Qualifications. Structural steel shall be erected by a qualified, competent erection contractor. To establish qualification the erection contractor shall submit to the Department proof of their experience on previous projects of equivalent complexity which, at a minimum, include the following:

A) Any one lift using two or more cranes/derricks/poles,
B) Steel spans over water or active railroad/rapid transit tracks,
C) Erection with floating equipment,
D) Field splicing primary members while held in place by erection equipment

The Department shall determine whether the submitted evidence is satisfactory to establish qualification and competency.

4.2 Erection Procedure.

General. The Contractor shall submit a detailed erection procedure to the Engineer for each bridge structural unit, prepared and sealed by a professional engineer licensed in Kentucky. The professional engineer who prepares the erection procedure

and calculations shall have experience in steel erection of similar size, complexity, and scope. The procedure shall address all requirements for erection of the structural steel into the final designed configuration and satisfy all written comments from the Engineer of Record and the Department or its agents prior to the start of erection. The procedure, as a minimum, shall include the following information:

Drawings.

A) Plan of the work area showing permanent support structures (piers and abutments), roads, waterways (including navigational channel), overhead and underground utilities, and other information pertinent to erection.
B) Erection sequence for all members noting any temporary support conditions, such as holding crane positions, temporary supports, falsework, etc. Member reference marks, when reflected on the erection plan, should be the same as used on shop detail drawings.
C) Primary member delivery location and orientation.
D) Location of each crane for each primary member pick, showing radius and crane support (barges, mats, etc.).
E) Capacity chart for each crane configuration and boom length used in the work.
F) Center of gravity locations for primary members.
G) Detail, weight, capacity, and arrangement of all rigging for primary member picks.
H) Lifting weight of primary member picks, including all rigging and pre-attached elements.
I) Details of any temporary lifting devices to be bolted or welded to permanent members, including: method and place (shop or field) of attachment; capacity; and method, time and crew responsible for removal.
J) Bolted splice assembly requirements.
K) Lifting/handling procedure for any primary member that has a lifted length-to-width ratio (l /b) greater than 85.
L) Blocking details for bridge bearings.

Calculations.

A) Design calculations indicating the load capacity and verifying the stability of temporary supports for structure and crane(s) for each pick and release.
B) Calculations to substantiate structural adequacy and stability of all steel members for each step of bridge assembly.
C) Calculations to verify adequate capacity of contractor-fabricated rigging such as lift beams, welded lugs, spreader beams, beam clamps, etc. Submit manufacturers' certification or catalog cuts for pre-engineered devices.
D) Geometrical information that will be used to monitor the structure during erection to ensure that the final geometry of the structure is as indicated on the plans.

Coordination Items.

- Review / approval by other agencies as required (e.g., US Coast Guard, US Army Corp of Engineers, etc.).
- Conform to Special Note for Helper Boat to minimize impacts to commercial towing industry.
- Construction activities that occur concurrently with steel erection, such as setting forms or concrete deck pours.

4.3 Shop Drawings. Shop drawings for arch system and components shall conform to KYTC Section 607 and Special Provision for Shop Drawings & Welding Procedures.

5.0 TRANSPORTATION, HANDLING AND SUPPORT.

5.1 Transportation.

Responsibility. The Contractor is responsible for coordinating delivery from the fabricator to the jobsite and for providing adequate site access.

Shipping plan. The Contractor is responsible for preparing a shipping plan indicating support, lateral bracing, and tie-down points for primary members during transportation to the jobsite.

Handling. Ship primary members upright, unless otherwise approved by the Department. Load, support, and unload primary members in a manner that will not damage, excessively stress or permanently deform the steel or cause repeated stress reversals in the members.

5.2 Lifting and Assembly.

General. Lift, position and assemble all members in accordance with the approved erection procedures. The proposed crane location(s) and member delivery location(s) may require modification in the field to suit changing jobsite conditions. However, cranes and material must be located such that the lift is safe and within the crane manufacturer's rated capacity for all required positions.

Lifting devices. Install lifting devices, including bolted assemblies using existing bolt holes (splices, cross frame connection plates, etc.), using owner-approved details. welded lugs are not permitted without approval of the Engineer."

Erection stability. All structural members shall be stabilized with falsework, temporary bracing and/or holding cranes until the structure is complete and has the necessary lateral stability to make the structure self-supporting.

Falsework and temporary supports. Falsework and temporary supports shall be detailed to ensure that the temporary elevation of supported steel accommodates the deflections expected to occur as the structure is completed.

Pins. Pins are normally used to align holes for bolted field connections. Field reaming to facilitate fit-up will only be allowed with the Department's prior approval. Any abnormal distortion of the member or of the holes during the alignment process shall be immediately reported to the Engineer.

Connections. For splice connections of primary members, fill at least 50 percent of the holes prior to crane release. The 50 percent may be either erection bolts in a snug tight condition or full-size erection pins. At least half (25 percent of all holes) shall be filled with bolts, and sufficient pins shall be used near outside corners of splice plates and at member ends near splice plate edges to ensure alignment. Uniformly distribute the filled holes.

The 50 percent requirement may be waived if a reduced percentage is calculated as sufficient and shown on the approved erection procedure. Permanent bolts may be used as erection bolts, provided they are installed in accordance with the specifications.

Primary member splice connections that are assembled on the ground (prior to erection) shall be 100 percent complete, in the no-load condition, prior to any lifting operation.

Abnormalities. Any abnormal member deformation or brace deflection after crane release or temporary support removal shall be immediately reported to the Engineer for swift resolution. Further work affecting the area, except for restoring support or adding bracing, shall be stopped until the deformation/deflection is resolved.

6.0 REPAIR.

6.1 Documentation. The Contractor is responsible for documenting damage due to handling, removal of erection aids, aligning members and other actions, uncorrected misfits at connections, and misalignments exceeding tolerances in erected members. As-received damage attributable to transport or fabrication shall also be documented.

6.2 Implementation. The Contractor shall propose a method of repair and basis for acceptance for the Department's review.

6.3 Repair Procedures. Submit repair procedures for damaged or misaligned steel in the form of sketches and/or written procedures as applicable. Information must provide sufficient detail for the Department to adequately review the repair application. After repairs are complete, the Contractor shall provide as-built detailed drawings, NDT results, and procedures/materials used to the Engineer for inclusion in the project file.

6.4 Welds. Field or shop welds that are unacceptable must be repaired in accordance with AWS D1.5. Responsibility for the cost of the repair and subsequent inspection shall be at the Contractor's expense.

7.0 MEASUREMENT. The cost of fabricating, furnishing and installing the arch span superstructure, including tied arch rib, tie girder, knuckle, hanger attachments, floor beams, stringers and bracing; and all material, labor, equipment, tools and incidentals necessary to complete the work as specified in the Contract Documents; shall be included in the lump sum unit price for Structural Steel – Arch Span.

(Note: The cost for fabricating and installing the arch hanger system is separate from this pay item and is covered in Special Note for Bridge Strand Hangers.)

8.0 PAYMENT.

Code	Pay Item	Pay Unit
08160	STRUCTURAL STEEL – ARCH SPAN	LS

SPECIAL NOTE FOR STEEL ERECTION – GIRDER SPANS

Marshall - Trigg Counties
US 68/KY80 Bridge over Kentucky Lake – Drawing No. 24686

STEEL ERECTION RESPONSIBILITY

The stability of the structure during erection, and the final geometry of the structure, is the responsibility of the contractor. The contractor shall retain an erection engineer for the purpose of evaluating the stability, state of stress and geometry of the structure during and after erection. The contractor shall erect the bridge in a safe manner without over stressing the structural components during erection and shall leave the structure in a state of stress compatible with the design.

Structural steel shall be in conformance with Section 607 of Kentucky Transportation Cabinet's standard specifications for road and bridge construction. Steel erection shall be in general conformance with the AASHTO/NSBA steel bridge erection guide specification, S10.1-2007.

CONSTRUCTION LOADING

Load capacity and stability of the steel girders has been verified only for the completely erected steel superstructure, prior to deck placement. Load capacity in the fully-erected state has been checked using AASHTO LRFD bridge design specifications, section 3.4.2 with a load factor of 1.25 for dead loads and for wind. A construction phase horizontal wind pressure of 50 psf, representing the mean-hourly wind speed with a 10-year return period has been used. Allowable lateral deflection under construction wind loading is l/150 (span/150).

The load capacity and stability verification of partially completed girders in the various stages of erection prior to installation of all girders, crossframes, and lateral bracing is the responsibility of the contractor. A minimum construction horizontal wind pressure of 50 psf shall be used in the design of temporary shoring / falsework and for checking partially erected girders.

Girders and their bearing stiffeners should be vertical under full dead load. Uplift at bearings shall be prevented in each construction phase.

CHANGES TO THE STRUCTURE

Any changes to the structural steel system shown in the contract plans requires reanalysis for load capacity and stability for both construction and permanent load conditions. Diaphragm action of the stay-in-place forms shall be neglected in all analyses.

Dead load deflection, girder haunch thickness, and verified construction stresses are based on the slab pouring sequence shown in plans. Any deviation from the plan slab pouring sequence will

need to be evaluated by the engineer of record to determine the effect on haunch, dead load deflection, and girder stress.

CONCEPTUAL ERECTION SEQUENCE

The need for and location of falsework has been estimated for one conceptual erection sequence. The contractor may choose and develop any sequence that can safely erect the bridge without overstress or damage to the structural steel. The design of any needed shoring / falsework and their foundations is the responsibility of the contractor.

ERECTOR QUALIFICATIONS

Structural steel shall be erected by a qualified, competent erection contractor. To establish qualification, the erection contractor shall submit to the owner documented previous, equivalently complex erection projects which, at a minimum, include the following:

A) Any one lift using two or more cranes/derricks/poles,
B) Spans over water or active railroad/rapid transit tracks,
C) Erection with floating equipment,
D) Field splicing primary members while held in place by erection equipment

The owner shall determine whether the submitted evidence is satisfactory to establish qualification and competency.

ERECTION PROCEDURE

General: the contractor shall submit a detailed erection procedure to the owner for each bridge structural unit, prepared and sealed by a professional engineer licensed in the Commonwealth of Kentucky. The professional engineer who prepares the erection procedure and calculations shall have experience in steel erection of similar size, complexity, and scope. The procedure shall address all requirements for erection of the structural steel into the final designed configuration and satisfy all written owner comments prior to the start of erection. The procedure, as a minimum, shall include the following information:

Drawings:

A) Plan of the work area showing permanent support structures (piers and abutments), roads, waterways (including navigational channel), overhead and underground utilities, and other information pertinent to erection
B) Erection sequence for all members noting any temporary support conditions, such as holding crane positions, temporary supports, falsework, etc. Member reference marks, when reflected on the erection plan, should be the same as used on shop detail drawings
C) Primary member delivery location and orientation

D) Location of each crane for each primary member pick, showing radius and crane support (barges, mats, etc.)
E) Capacity chart for each crane configuration and boom length used in the work
F) Center of gravity locations for primary members
G) Detail, weight, capacity, and arrangement of all rigging for primary member picks
H) Lifting weight of primary member picks, including all rigging and pre-attached elements
I) Details of any temporary lifting devices to be bolted or welded to permanent members, including method and time (shop or field) of attachment, capacity, and method, time and responsibility for removal.
J) Bolted splice assembly requirements
K) Lifting/handling procedure for any primary member that has a lifted length divided by width (l / b) greater than 85
L) Blocking details for bridge bearings

Calculations:

A) Design calculations indicating the load capacity and verifying the stability of temporary supports for structure and crane(s) for each pick and release
B) Calculations to substantiate structural adequacy and stability of girders for each step of bridge assembly
C) Calculations to verify adequate capacity of contractor-fabricated rigging such as lift beams, welded lugs, spreader beams, beam clamps, etc. Submit manufacturers' certification or catalog cuts for pre-engineered devices
D) Geometrical information that will be used to monitor the structure during erection to ensure that the final geometry of the structure is as indicated on the plans

Coordination items

A) Review / approval by other agencies as required (e.g., us coast guard, us army corps of engineers, etc.)
B) Construction activities that occur concurrently with steel erection, such as setting forms or concrete deck pours

TRANSPORTATION

Responsibility: The contractor is responsible for coordinating delivery from the fabricator to the jobsite and for providing adequate site access.

Shipping plan: The contractor is responsible for preparing a shipping plan indicating support, lateral bracing, and tie-down points for primary members during transportation to the jobsite.

Handling: Ship primary members upright, unless otherwise approved by the owner. Load, support, and unload primary members in a manner that will not damage, excessively stress, or permanently deform the steel and not cause repeated stress reversals.

LIFTING AND ASSEMBLY

General: Lift, position, and assemble all members in accordance with the approved erection procedures. The proposed crane location(s) and member delivery location(s) may require modification in the field to suit changing jobsite conditions. However, cranes and material must be located such that the lift is safe and within the crane manufacturer's rated capacity for all required positions.

Lifting Devices: Install lifting devices, including welded lugs and bolted assemblies using existing bolt holes (splices, cross frame connection plates, etc.), and use owner-approved details.

Erection Stability: Girders shall be stabilized with falsework, temporary bracing, and/or holding cranes until a sufficient number of adjacent girders are erected with cross frames connected to provide the necessary lateral stability and to make the structure self-supporting.

Falsework and Temporary supports: Falsework and temporary supports shall be detailed to ensure that the temporary elevation of supported steel accommodates the deflections expected to occur as the structure is completed.

Pins: Pins are normally used to align holes for bolted field connections. Field reaming to facilitate fitup will only be allowed with the owner's prior approval. Any abnormal distortion of the member or of the holes during the alignment process shall be immediately reported to the owner.

Connections: For splice connections of primary members, fill at least 50 percent of the holes prior to crane release. The 50 percent may be either erection bolts in a snug tight condition or full-size erection pins, but at least half (25 percent of all holes) shall be bolts, and sufficient pins shall be used near outside corners of splice plates and at member ends near splice plate edges to ensure alignment. Uniformly distribute the filled holes.

The 50 percent requirement may be waived if a reduced percentage is calculated as sufficient and shown on the approved erection procedure. Permanent bolts may be used as erection bolts, provided they are installed in accordance with the specifications.

Primary member splice connections that are made up on the ground (prior to erection) shall be 100 percent complete, in the no-load condition, prior to any lifting operation.

Abnormalities: Any abnormal member deformation or brace deflection after crane release or temporary support removal shall be immediately reported to the owner for swift resolution. Further work affecting the area, except for restoring support or adding bracing, shall be stopped until the deformation/deflection is resolved.

REPAIR

Documentation: The contractor is responsible for documenting damage due to handling, removal of erection aids, aligning members and other actions, uncorrected misfits at connections, and misalignments exceeding tolerances in erected members. As-received damage attributable to transport or fabrication shall also be documented.

Implementation: The contractor shall propose a method of repair and basis for acceptance for the owner's review.

Repair Procedures: Submit repair procedures for damaged or misaligned steel in the form of sketches and/or written procedures as applicable. Information must provide sufficient detail for the owner to adequately review the repair application. After repairs are complete, the contractor shall provide as-built detailed drawings, NDT results, and procedures/materials used to the owner for inclusion in the project file.

Welds: Field or shop welds that are unacceptable must be repaired in accordance with d1.5. Responsibility for the cost of the repair and subsequent inspection shall be based on the cause.

SPECIAL NOTE FOR STAINLESS STEEL REINFORCEMENT

1.0 DESCRIPTION. The Contractor shall use stainless steel reinforcement bars in the concrete deck slab, curb, and sidewalk, as indicated in the plans. Reinforcement bars shown in the Plans marked with the suffix "SS" shall be stainless steel as described herein.

The work shall be performed in accordance with the applicable requirements of sections 602 and 811 of the standard specifications.

2.0 MATERIALS.

Grade and Type: The Contractor shall supply test results certifying that the materials conform to Grade 60 or 75 deformed reinforcement bars per ASTM A955, including the annex, and must conform to one of the following UNS designations; S24100, S32205, S32304, S20910, S30400, S31603, S31653, S32101, S32201, or S31803.

All bars shall be of the same UNS designation.

Chemical Composition: Material shall conform to that specified in ASTM A276, Table 1, Chemical Requirements.

Heat Treatment: Bars may be furnished in one of the heat treatment conditions listed in ASTM A955, and as needed to meet the requirements of this specification.

Finish: Bars are to be supplied free of dirt, mill scale, oil, and debris by pickling. Bars shall be fabricated and bent using equipment that has been thoroughly cleaned or otherwise modified to prohibit contamination of the stainless steel from fragments of carbon steel or other contaminants.

Reinforcing bars displaying rust/oxidation, questionable blemishes, or that deviate from round shall be subject to rejection.

Bending: Bending shall be performed in accordance with Section 602 of the Standard Specifications and ASTM A955.

Manufacturers: The following manufactures are capable of producing material meeting this specification. Other suitable manufacturers may also exist. The Contractor is responsible for ensuring that all materials supplied meet the Contract requirements.

Supplier	Contact	Phone No.
Altec Steel, Inc. 5515 Meadow Crest Drive Dallas, TX 75229	Ross Paulson	425-823-1913
Dunkirk Specialty Steel 88 Howard Ave	Gary Zaffalon	800-916-9133 716-366-1000

Dunkirk, NY		Ext 323
North American Stainless 6870 Highway 42 East Ghent, KY 41045	Todd Sullivan	502-347-6034
Salit Specialty Rebar 3235 Lockport Road Niagara Falls, NY 14305	Kevin Cornell	877-299-1700 716-299-1990
Talley Metals P. O. Box 2498 Hartsville, SC 29551	Melba Deese	843-335-7326 800-334-8324 Ext 712-2356

Control of Material: Samples for testing shall be supplied to the KYTC Materials Laboratory for testing, generally following applicable provisions of KM-101. One sample per heat per bar size shall be supplied. Each sample shall consist of two five-foot-long specimens.

Mill Test Reports: Reports shall be provided for the Project and shall:

1. Be from the supplying mill verifying that the stainless reinforcement provided has been sampled and tested and the test results meet the Contract requirements;

2. Include a copy of the chemical analysis of the steel provided, with the UNS designation, the heat lot identification and the source of the metal if obtained as ingots from another mill;

3. Include a copy of tensile strength, yield strength and elongation tests on each of the sizes (diameter in millimeters) of stainless steel reinforcement provided.

4. Permit positive determination that the reinforcement provided is that which the test results cover.

5. Include a statement certifying that the materials are being melted and manufactured in the United States.

3.0 CONSTRUCTION.

Methods: Construction methods shall conform to Section 602 of the Standard Specifications except as modified below:

Ship, handle, store, and place the stainless steel reinforcement bars according to the applicable provisions with the following additions and exceptions:

1. Prior to shipping ensure that all chains and steel bands will not come into direct contact with the stainless steel reinforcement bars. Place wood or other soft materials (i.e., thick

cardboard) under the tie-downs. Alternatively, use nylon or polypropylene straps to secure the stainless steel reinforcement bars.

2. When bundles of reinforcement steel and stainless steel reinforcement bars must be shipped one on top of the other, the stainless steel reinforcement bars should be loaded on top. Use wooden spacers to separate the two materials.

3. Outside storage of stainless steel reinforcement bars is acceptable. Cover the stainless steel reinforcement bars with tarpaulins.

4. Store stainless steel reinforcement bars off the ground or shop floor on wooden supports.

5. Do not use carbon steel tools, chains, slings, etc. when fabricating or handling stainless steel reinforcement bars. Only use nylon or polypropylene slings.

6. Place all stainless steel reinforcement on bar chairs that are solid plastic, stainless steel, or epoxy-coated steel. Fabricate stainless steel metal chairs and continuous metal stainless steel supports from stainless steel conforming to the requirements of ASTM A493, Type 316, UNS number S31600; or Type 316L, UNS number S31603. Stainless steel chairs used above steel beams shall have plastic coated feet.

7. Tie wire used to tie stainless steel reinforcement shall be 16 gauge wire fabricated from stainless steel alloy Type 316L, UNS designation S31603, dead soft annealed, annealed at size.

8. Do not tie stainless steel to uncoated or coated reinforcement, or to galvanized attachments or galvanized conduits. Direct contact is not acceptable. When stainless steel reinforcing bars or dowels are adjacent to coated or uncoated reinforcing bars or galvanized metals, maintain a minimum 1 inch clearance between the two metals. Where insufficient space exists to maintain this minimum, the bar may be sleeved with a continuous 1/8" minimum thickness polyethylene or nylon tube bound with nylon or polypropylene cable ties and extending at least 1 inch in each direction past the point of closest contact between the two dissimilar bars.

9. Uncoated fasteners, anchors, lifting loops, etc., that extend from the top flange of prestressed beams into the bridge deck shall be completely removed or cut off flush with the top flange of the beam prior to casting the deck.

10. To prevent corrosion from dissimilar metals, when stainless steel reinforcement is used in abutments, end diaphragms, concrete barriers, etc., only epoxy-coated or non-metallic snap ties, straps, or other forming hardware shall be permitted.

Notification: The Contractor shall notify the Engineer a minimum of 2 weeks prior to placing the stainless steel reinforcement.

Splices: Splices shall generally be of the lap type.

Approval: Stainless steel reinforcement placed in any member must be inspected and approved by the Engineer before placing concrete. Concrete placed in violation of this specification may be rejected and removal required.

4.0 MEASUREMENT. Measurement will be in pounds of steel placed in the structure as shown on the plans at the contract unit price.

5.0 PAYMENT. "STEEL REINFORCEMENT STAINLESS STEEL" will be paid for at the contract price per pound and shall be compensation in full for all costs of fabricating, shipping, furnishing and installing the reinforcement and all component materials as specified in this Special Note and in the Contract Plans.

Code	Pay Item	Pay Unit
24112EC	STEEL REINFORCEMENT STAINLESS STEEL	LB

SPECIAL NOTE FOR BRIDGE STRAND HANGERS

1.0 DESCRIPTION. This work shall consist of the manufacturing, testing, fabricating, transporting, and installation of arch hangers, sockets and spacers for tied arch bridges. Materials and workmanship shall be in accordance with the KYTC Standard Specifications (KYTC); AASHTO/ AWS D1.5M/D1.5 "Bridge Welding Code"; AWS D1.1/D1.1M "Structural Welding Code – Steel"; AASHTO "LRFD Bridge Design Specifications", 6th Edition (AASHTO LRFD Design); AASHTO "LRFD Bridge Construction Specifications," 3rd Edition, 2010 (AASHTO LRFD Construction); the Contract Documents; and this Special Note.

2.0 MATERIALS. Materials shall conform to the following:

A. Strand. Hangers shall consist of galvanized steel wire structural strand composed of zinc-covered wires to make up the finished diameter. The structural strand for the bridge hangers shall meet the requirements of ASTM A586, *"Standard Specification for Zinc-Coated Parallel and Helical Steel Wire Structural Strand,"* with Class A coating inner wires and Class C coating outer wires. Strand shall be pre-stretched as required in this special provision.

The design of the strands for the structure and the structure's fabricated geometry shall be based on the appropriate Modulus of Elasticity for the material being used.

B. Sockets. Sockets shall be forged or cast steel. Forged sockets shall meet the requirements of ASTM A668, *"Standard Specification for Steel Forgings, Carbon and Alloy, for General Industrial Use"*, Class C, and shall be annealed. Cast sockets shall be fully annealed high strength castings conforming to ASTM A148, *"Standard Specification for Steel Castings, High Strength, for Structural Purposes."* All sockets shall be galvanized in accordance with ASTM A123, *"Standard Specification for Zinc (Hot-Dip Galvanized) Coatings on Iron and Steel Products."* Sockets shall be of sufficient strength to produce a failure in the strand material, rather than a failure of the socket itself.

C. Pins. Socket pins shall satisfy ASTM A668 Class F requirements. Furnish pins conforming to KYTC Subsection 607.03.09 Pins and Rollers. Provide a smooth finished surface with an ANSI 250 finish.

D. Zinc. Slab zinc for socket to strand attachment shall meet the requirements of ASTM B6, *"Standard Specification for Zinc"*, high grade or better.

E. Spacers. All materials for hanger spacers shall be new. No reclaimed elastomeric materials shall be incorporated in the fabrication of the spacers.
The elastomeric materials specified for the hanger spacers shall be either 100 percent virgin Neoprene (polychloroprene), or natural rubber (polyisoprene) and shall conform to Section 18.2 of the AASHTO LRFD *Bridge Construction Specifications, 3nd Edition, 2010*. The nominal hardness of the elastomeric element(s) shall not exceed 60 on the Shore A scale.

Laminates shall be rolled mild steel sheets meeting the requirements of ASTM A709, Grade 36. Structural steel for manufacture of the hanger spacers shall meet the requirements of ASTM A709, Grade 36 and shall be galvanized in accordance with ASTM A123. All galvanizing shall be done prior to any required bonding of steel to rubber. Surfaces of steel to be bonded to rubber shall not be galvanized.

F. Wire Rope Lubricant. Bridge strand shall be treated with PreLube 19 Preservative Lubricant by Grignard, Inc., applied in accordance with manufacturer's recommendations.

3.0 DESIGN. Design shall be in accordance with the Contract Documents, this special provision and other specifications referenced herein.

4.0 FABRICATION. Hanger geometry shall be as defined in the Contract Plans.

Wires used in each hanger shall be made in one continuous piece. The splicing of wire is not permitted. Strand shall be of long lay, but shall not be of such length to prevent keeping the center in its true position during any of the operations before the hangers are in their final positions.

Before commencing with the manufacture of the strands, the Contractor shall be assured by preliminary tests that the proposed material will meet the specifications with regard to strength and elasticity. Once the manufacture of the strand has begun, no changes shall be made or allowed as to the grade of wire, the construction or lay, or other factors which would affect the uniformity of the product.

Each length of strand as fabricated shall be prestressed under a load equal to 55 percent of its specified ultimate (breaking) strength in straight tension. The prestressing shall be done in an approved manner that will remove all of the structural stretch that may occur under the load which the hangers are designed to carry.

After prestressing, the strand shall be measured for the various hanger lengths while under a known tension equal to the dead load stress shown on the plans, using calibrated steel tapes. After marking for length the load shall be released and then reapplied. A second measurement shall then be made and the two measurements shall check within a tolerance of 0.25 inches.

At the time the strand is measured, the Contractor shall mark the centerline between sockets and shall place marks using paint or other approved method on the outside surface of the strand at sufficiently close intervals for use as a guide to eliminate any change in length of the hangers due to twisting.

The strand shall then be cut and the sockets shall be put on carefully to ensure socket and strand alignment. The sockets shall be attached to the strands by using zinc as specified in ASTM B6, and using a reliable method that will not permit the strand, when stressed to 100 percent of its specified ultimate strength under the test specified hereafter, to slip more than 0.5 inches. If a greater movement should occur, the method of attachment shall be changed until a satisfactory one is found. Each end fitting of the finished assembly shall be proof-loaded to a minimum of 50 percent of the ultimate strength of the strand.

The laminated components of the spacers shall be individually molded to the required size. Completed units shall be packaged and crated in such a manner that they will not become damaged while being handled, transported or stored. Any unit, upon inspection by the Engineer

or KYTC, deemed to be damaged in any way will be replaced by the Contractor at his expense.

5.0 SAMPLING, TESTING & INSPECTION.

A. Sockets. Sockets shall be subjected to Charpy impact tests in accordance with ASTM A781, *"Standard Specification for Castings, Steel and Alloy, Common Requirements, for General Industrial Use,"* S9 (absorbed energy) shall be made on each heat. If Charpy V-notch test values are less than 15 ft-lb at 55 degrees F for any heat, all sockets represented by that heat will be rejected.

All sockets shall be given a visual inspection and evaluated for defects in accordance with the Manufacturers Standardization Society of Valve and Fitting Industry's *Quality Standard for Steel Castings for Valves, Flanges and Fittings and other Piping Components - Visual Method for Evaluation of Surface Irregularities,* SP-55, latest edition. The Engineer, with KYTC concurrence, will determine the acceptability of sockets evaluated in accordance with this standard. Should a socket be unacceptable, that socket shall be replaced, or alternatively, the Contractor may propose the use of other non-destructive test methods to establish the acceptability and/or reparability of the socket. These test methods, done at the expense of the Contractor, may include, for example, radiography, ultrasonic, magnetic particle or dye penetrant. The Engineer shall determine the acceptability and/or reparability of a socket based on the results of the tests conducted. For those sockets that are repaired follow-up non-destructive tests, at the Contractor's expense, shall be performed to verify the success of the repair procedure. The Engineer shall be the sole judge as to the suitability of a repaired casting.

Visual Inspection as required above shall be performed by a commercial testing laboratory approved by the Engineer as being qualified to perform such work. If visual examination reveals any defect, nondestructive tests as deemed appropriate by the Engineer for the type of defect observed, shall be required. Non-destructive tests shall be performed by the same approved laboratory In accordance with the appropriate Supplementary Requirements of ASTM A781.

B. Strength & Modulus of Elasticity. After prestressing, the modulus of elasticity of each strand shall be determined, and it shall be submitted to the Engineer and KYTC. The modulus of elasticity shall be determined from a gauge length of no less than 100 inches and shall be computed on the gross metallic area of each strand size. A stress-strain curve shall be plotted from the test results of each strand size, and from these curves, the modulus of elasticity shall be computed. The elongation readings used for computing the modulus of elasticity shall be taken when the strand is stressed to not less than 10 percent of the listed strength nor more than 90 percent of the prestressing load. The stretch in any strand during the above increment of load shall not vary more than 6 percent from the average stretch of all strand tested. Preliminary to the testing of the strand specimens, the specimen shall be stressed in the testing machine to an accurately measured load equal to the prestressing load, following which the load shall be released and the test commenced. The preliminary stressing procedure shall be uniform for all specimens. Tests for modulus of elasticity of the strand may be made at the time that the test pieces are tested for strength.

From each prestressed length of strand, one piece shall be cut, after prestressing,

of sufficient length to make a test for strength and elasticity on a single straight strand. The ends of the test pieces shall be socketed with sockets of the same design as those proposed for use in the construction. The strands, in single part tests, shall develop a minimum ultimate strength equal to the value stipulated in the applicable ASTM specification for the material being used and for the size of strand or rope specified. If, after six or more tests of straight strand of each size have been made, the Engineer and KYTC find that the strength and elasticity have sufficient uniformity, one test on a straight strand of each size may be made thereafter from each manufactured length of strand of each size, instead of one from each prestressed length. The strand shall show a well-defined and uniform elastic stretch and recovery after prestressing.

C. Hanger Assemblies. The Contractor shall prepare at least 8 specimens of hanger of each strand size, at least 25 diameters long, with sockets (selected at random from those prepared for use) attached to each end, and these specimens shall be stressed to destruction. Under this test, the specimens shall develop the ultimate strength. Material and method of socketing shall be the same for both the tests and the actual hanger strand. The sockets in every instance shall be of sufficient strength to produce failure in the strand material. Sockets used for the tests may not be reused in the actual construction. If an assembly should fail in the anchorage of the strand in the socket, or if a socket should break or otherwise fail at less than the specified ultimate load during the tests, six additional assemblies shall be fabricated and the tests repeated. If one or more sockets fail during additional tests, the entire lot shall be rejected and new sockets furnished and tested.

Certified test reports covering all the tests specified shall be furnished to the Engineer and KYTC. No claims for delay will be considered for testing or failure to submit required testing documentation in a timely manner.

Shop Inspection. The Engineer reserves the right to visit the manufacturer's fabrication shop for purposes of inspecting the manufacturing, assembly and testing of the hanger assemblies.

6.0 IDENTIFICATION, STORAGE & HANDLING. Identification marks shall be used on the strand to facilitate erection and the Contractor shall use suitable means to protect the strands in transit and during the handling and erection. Strands shall be properly coiled or rolled on reels. Any kinked or damaged strand will be rejected. Straightening of bent wires will not be permitted.

7.0 INSTALLATION. Hangers shall be installed so that the strands at each panel will be equally stressed. Necessary adjustment shall be provided through the use of threaded sockets.

The hanger strand shall be erected with sockets in the same relative position to each other as when the strands were measured and the sockets installed, with the markings along the length of the strand in a straight line.

Spacers shall be located at the intersection of network hangers. Spacers shall incorporate an elastomeric element for purposes of providing a degree of damping and shall hold the individual ropes or strands of each hanger in their correct geometric relationship.

8.0 SUBMITTALS. The Contractor shall submit to the Engineer for approval with KYTC concurrence all details, calculations, and any required shop drawings, catalog cuts, materials, equipment, methods and procedures proposed for: the manufacture and fabrication of the hangers and sockets; the assembly, testing, and erection of the hangers; and for the fabrication, furnishing, and installation of the hanger spacers; all complete in place. All calculations and shop drawings shall be signed and sealed by an Engineer registered in the Commonwealth of Kentucky.

The Contractor's submittal shall include all material designations and certified test reports or certificates of conformance or compliance, furnished by the manufacturer's testing laboratory or independent testing agency, attesting that all materials meet the requirements specified herein. Included in the submittal shall be the exact sizes of the strand proposed for the hangers, together with details for the construction of the hanger, giving the exact number and size of wires in each of the outer and inner layers, and their arrangement. The Contractor shall also submit the results of all tests performed on the fabricated spacer units during the construction process, such as shear tests, and any required stress-strain tests.

The geometric dimensions shown on the plans relative to hanger lengths and strand elongations or that are otherwise dependent on the hanger modulus of elasticity, shall be adjusted if the actual modulus of elasticity, as determined by the Contractor after prestressing the strand, differs from the design assumptions. In that case, the proposed adjustments shall be submitted with calculations to the Engineer for approval with KYTC concurrence.

9.0 MEASUREMENT. The cost of furnishing, fabricating, testing and installing of the hanger assemblies, including structural strand, anchor sockets, pins, threaded rods, nuts, washers, cotter pins and strand spacers and for galvanizing shall be included in the lump sum unit price for Arch Hanger Assembly.

10.0 PAYMENT.

Code	Pay Item	Pay Unit
24608EC	BRIDGE STRAND HANGER – FABRICATE & INSTALL	LS

SPECIAL NOTE FOR DISK BEARINGS

This Special Note will apply to all disk bearings indicated on the plans. It supplements information provided in the KYTC Standard Specifications. Where a conflict exists between this Special Note and the Standard Specifications, the provisions herein shall govern.

Section references herein are to the Department's 2012 Standard Specifications for Road and Bridge Construction.

1.0 DESCRIPTION. This work consists of designing, fabricating, testing, delivering and installing disk bearing assemblies at the locations shown on the Contract Plans in accordance with this special note the Standard Specifications and the AASHTO *LRFD Bridge Design Specifications,* 6th Edition, 2012 *(*AASHTO *LRFD Design)* and AASHTO *LRFD Bridge Construction Specifications*, 2010 (AASHTO *LRFD Construction.*)

Bearing assemblies include the disk bearings, masonry and sole plates, grout pads, anchor bolts, and appurtenant hardware. Disk bearings consist of a polyether urethane rotational element (the disk) confined by upper and lower steel bearing plates. Bearings shall have a shear resisting mechanism and/or positive location device to prevent lateral movement of the disk. Bearings shall provide for thermal expansion and contraction, rotation, camber movement, and creep and shrinkage of the structure, where applicable.

Disk bearings shall be supplied as fixed bearings, guided expansion bearings, or non-guided expansion bearings, as designated in the Contract Documents.

2.0 MATERIALS. Materials shall conform to the following:

A. **Steel Plate:** ASTM A572 Grade 50

B. **Stainless Steel:** Stainless steel shall conform to the requirements of ASTM A240, Type 304, and AASHTO *LRFD Construction* 18.1.2.5. Higher grades of stainless are permissible. The minimum thickness of the stainless steel shall be 13 gauge (0.094 inches) or as indicated in the Contract Plans. The stainless steel connection to the carbon steel attachment plate shall be seal welded to form an effective moisture seal.

C. **Polytetrafluoroethylene** (PTFE). PTFE sheet shall meet the requirements of AASHTO *LRFD Construction* 18.8.2.5 and be manufactured from pure virgin unfilled PTFE resin conforming to the material requirements of AASHTO *LRFD Construction* 18.8.2.

PTFE sheet shall be dimpled and lubricated, with dimples satisfying the depth, diameter and distribution requirements of AASHTO *LRFD Design* 14.7.2. Unless indicated otherwise in the Contract Plans, the minimum thickness of the PTFE sheet shall be 0.188 in. when the maximum dimension of the PTFE is less than or equal to 24 inches and 0.25 in. when the maximum dimension of the PTFE is greater than 24 in.

D. **Adhesive.** The Bearing Supplier shall use a uniform layer of epoxy adhesive to bond the PTFE to the recessed bearing plate below it. Epoxy Adhesive shall conform to AASHTO *LRFD Construction* 18.8.2.4 and shall be stable from -100°F to +250°F. PTFE

bonding surface shall be prepared in accordance with AAHTO *LRFD Construction* 18.8.2.10

The bearing supplier shall supply non-project specific test results showing that their standard epoxy connection typically achieves adhesive peel strengths of 20 lb. per inch between the PTFE material and carbon steel plate when tested per ASTM D429, Method B or ASTM D903.

E. **Polyether Urethane.** Polyether urethane shall conform to AASHTO *LRFD Construction* 18.3.2.8.

3.0 DESIGN. Disk bearings shall be designed and constructed in accordance with AASHTO *LRFD Design,* Section 14, and AASHTO *LRFD Bridge Construction*, Section 18. Calculations meeting the requirements of Section 8.0 SUBMITTALS in this Special Note shall be prepared and sealed by a professional engineer registered in the state of Kentucky.

The design of the bearings shall meet the following additional requirements:

A. The bearing assembly shall be removable and replaceable by raising the bridge superstructure 0.375 inch maximum. This requires the fabrication of a minimum of a four plate system including a masonry plate, lower bearing plate, upper bearing plate and sole plate.

B. The sole and masonry plates shall be designed to distribute the bearing loads into the surrounding substructure and/or superstructure. Service or installation considerations specified by the design engineer, such as weldability and bearing height, may require thicker masonry and sole plates than are required due to strength considerations alone.

C. When necessary, guide bars shall be welded to the slide plates or integrally machined into a larger plate. Guide bars shall be designed for the specified horizontal loads, but not less than 10% of the vertical capacity of the bearing. Guided members must have their contact area within the guide bars in all operating positions. The total clearance between guide bars and the guided member shall be 1/16 inch, ±1/32 inch.

D. The polyether urethane disk shall be designed for a maximum average compressive stress of 5000 psi. If the outer surface of the disk is not vertical, the stress shall be computed using the smallest plan diameter of the disk, excluding the area of any holes.

E. The shear restriction mechanism shall be designed to allow free rotation and withstand the specified horizontal forces. The mechanism shall be designed to withstand the design forces on the bearing without exceeding the allowable shear, bending or bearing capacities. Shear resistance of the urethane disk shall not be included.

4.0 FABRICATION.

4.1 General. Fabrication shall be in accordance with this special note and AASHTO *LRFD Construction* 18.3.3 and other provisions of that specification.

4.2 Product Prequalification. The Manufacturer shall demonstrate a minimum of five (5) years of experience in the design and manufacture of disk style bearings and be certified under the AISC Quality Certification Program - Simple Steel Bridges. Bearings shall be fabricated at facilities owned and operated by the manufacturer; the manufacturer being the single entity that designs, fabricates and supervises the installation of the bearing assemblies. The following disk bearing products are deemed pre-qualified:

A. Versiflex HLMR Disc Bearings supplied by:
The D.S. Brown Company
300 East Cherry Street
North Baltimore, Ohio 45872
Phone: (419) 257-3561

B. Disktron HLMR Disk Bearings supplied by:
R. J. Watson, Inc.
11035 Walden Ave
Alden, NY 14004
Phone: (716) 901-7020

Contractor is not limited to sourcing the disc bearings from the above suppliers as long as the alternate supplier meets the qualification requirements of this section.

4.3 Fabrication Tolerances. Except as noted, all bearing surfaces of steel plates shall be finished or machined flat within 0.0008 in./in. Out-of-flatness greater than 0.0008 in./in. shall be cause for rejection. The bottom surfaces of lower bearing plates (masonry plates) designed to rest on bearing pads shall not exceed and out-of-flatness value of 0.005 in./in. Oxygen cut surfaces shall not exceed a surface roughness value of 1000 micro-inches, as defined by ANSI B46.1.

Components of the bearing shall satisfy additional tolerances specified in AASHTO *LRFD Construction* 18.3.3.1 and Table 18.1.4.2-1.

4.4 Welding. All welding shall conform to and all welders shall be qualified in accordance with the requirements of the current AASHTO/AWS D1.5M/D1.5 *Bridge Welding Code*.

4.5 Coatings. All mill scale shall be removed from steel plates by means of abrasive blasting in accordance with SSPC-SP10. The plate surfaces above and below the polyether urethane disk shall be abrasive blast cleaned to a near white condition as defined in SSPC-SP10. The blast profile shall be jagged rather than "peened".

The bearing assemblies shall be shop painted in accordance with Standard Specifications Section 821 and paint manufacturer's recommendations. Galvanizing and field painting will not be permitted. The surfaces to be painted or metalized shall be

shown in the shop drawings. The following areas are not to be coated: (a) any PTFE, Polymer urethane and stainless steel surfaces; (b) shear resisting mechanism and anchor hole.

Connection bolts and washers shall be galvanized per ASTM A153.

5.0 SAMPLING, TESTING & INSPECTION. Sampling, testing and inspection shall be performed in accordance with the applicable requirements of AASHTO *LRFD Construction* 18.1.5. All testing shall be performed in the presence of a representative of KYTC or its designated inspection agent. Section references in the following two paragraphs are with respect to AASHTO *LRFD Construction* unless otherwise stated.

5.1 Performance Testing. In addition to the material certification tests described in Section 18.1.5.2.2 for the materials specified in Section 2.0 of this special note, five additional tests may be required, depending on the bearing types being utilized. The first three tests shall be conducted on all bearing types (fixed, free and guided) and include: (1) Dimension Check (Section 18.1.5.2.4); (2) Clearance Test (Section 18.1.5.2.5); and (3) short-term compressive Proof Load Test (Section 18.3.4.4.4). The remaining two tests are conducted as follows: (4) Coefficient of friction test shall be performed on a representative sliding bearing (free and guided) following the provisions of Section 18.1.5.2.6. (5) A horizontal load capacity test shall be conducted on fixed and guided bearing assemblies to following the provisions of Section 18.1.5.2.8.

Long-term deterioration tests (Section 18.1. 5.2.7) are not required for bearing products listed as pre-qualified in Section 4.2 of this special provision. The requirement for performing long-term deterioration tests may be waived by the Department for alternate supplier products pending the submission of evidence indicating satisfactory long-term performance of the products. The Department shall be the sole authority in making the decision to waive the long-term deterioration tests for a proposed product.

5.2 Performance Criteria. If any of the tests fail, then all bearings of that lot shall be rejected, unless the Bearing Supplier elects to test all bearings.

Bearings not damaged during the testing described in Section 5.1 of this special note may be used in the work.

Certificate of Compliance: In addition to records of test results, the contractor's disc bearing supplier shall submit Certificates of Compliance for the disc bearings indicating the materials, fabrication, testing, and installation are as specified herein.

Shop Inspection. The Engineer reserves the right to visit the manufacturer's fabrication shop for purposes of inspecting the manufacturing, assembly, testing and painting of the bearings.

6.0 IDENTIFICATION, STORAGE & HANDLING. Every bearing shall have the project identification number, lot number and individual bearing number indelibly marked with ink on a side that will be visible after erection.

Bearing assemblies shall be handled by their bottom surfaces only, and shall not be lifted by their tops, sides and/or shipping bands. Completed bearings shall be individually banded in the upright position. When in storage the bearings shall be kept banded, wrapped and secured in a clean, dry and upright position. Packaging shall be adequate to prevent damage from impact as well as from dust and moisture contamination during shipping and storage.

At no time prior to completion of the project, may any bearing be disassembled without authorization from the Bearing Supplier.

7.0 INSTALLATION. Disk bearings shall be installed in accordance with the Contract Documents and the approved shop drawings. A technical representative of the bearing Manufacturer shall be readily available to provide guidance to the Contractor during the entire installation process.

Bearings shall be clearly piece-marked with a numbering system to ensure appropriate field matching of upper and lower assembly components. Mark centerlines on bearing base plate and slide plate edges. These identification marks will be used to measure offsets in the field. Use indelible ink to place these marks. Bearing devices shall not be disassembled unless otherwise permitted by the engineer or manufacturer.

The Contractor shall adjust bearing seat elevations to accommodate the final bearing height. Install bearings in accordance with the position and orientation show on the Contract Plans. The Contractor shall take special care to protect stainless steel and PTFE surfaces from damage and/or debris intrusion during installation of bearings and anchorage. Welding to bearing plates after assembly is permitted provided that welding procedures restrict the maximum temperature in the areas of the urethane disk and PTFE to no more than 225 degrees Fahrenheit as determined by the use of temperature indicating wax pencils. Protective material shall be placed over the bearing assembly to protect against sparks and flash. After welding is complete, exposed steel shall be touched up in accordance with the specified coating system.

Upon final installation of the bearings, the Engineer shall inspect the bearing components to assure that they are level and parallel to within 0.03125 in./ft. Any deviations in excess of the allowed tolerances shall be corrected.

8.0 SUBMITTALS. Prior to fabrication of the bearing assemblies, the manufacturer shall submit shop drawings complying with AASHTO *LRFD Construction* 18.1.1. to the Engineer for review and approval. Such drawings shall show all details of the bearings and of the materials proposed for use and shall be approved by the Engineer prior to the fabrication of the bearings or construction of the beam seats. Such approval shall not relieve the Contractor of any responsibility under the contract documents for the successful completion of the work.

The shop drawings shall include, but not be limited to, the following information.

A. Plan and elevation of each disc bearing type
B. Complete details and sections showing all materials (with ASTM or other designations) incorporated into the disc bearings assemblies
C. The maximum design coefficient as shown in the Contract Drawings
D. Vertical and horizontal load capacities and movement ratings
E. All bearing connection details

The shop drawings shall be stamped by a professional engineer registered in the Commonwealth of Kentucky and employed by the bearing supplier. Do not perform any fabrication until the approved shop drawings are in the hands of the Inspector and fabricator and the Engineer has authorized fabrication.

9.0 MEASUREMENT. The Department will pay for Disk Bearings at the contract unit price bid for each type. The Department will not pay for bearings replaced due to damage or

rejection. Payment is full compensation for furnishing all materials and equipment necessary to fabricate, inspect, test, ship and install the disk bearings. All prescribed work shall be done in a workmanlike and acceptable manner and shall include all labor and incidentals necessary for completion.

10.0 PAYMENT.

Code	Pay Item	Pay Unit
24614EC	DISK EXPANSION BEARING	EACH

SPECIAL NOTE FOR SEISMIC ISOLATION BEARINGS - LEAD CORE ELASTOMERIC

This Special Note applies to six Lead-Core Elastomeric (LCE) Seismic Isolation bearings for Span 5 indicated on the plans. It supplements information provided in the standard specifications. Where a conflict exists between this Special Note and the standard specifications, the provisions herein shall govern.

1.0 DESCRIPTION. This work consists of designing, fabricating, testing, delivering and installing six Lead-Core Elastomeric (LCE) Seismic Isolation bearings assemblies at the locations shown on the Contract Plans in accordance with: this special note; KYTC Standard Specifications for Road and Bridge Construction, 2012 Edition (KYTC); AASHTO *LRFD Bridge Design Specifications*, 6th Edition, 2012 *(*AASHTO *LRFD Design*); AASHTO *LRFD Bridge Construction Specifications*, 2010 (AASHTO *LRFD Construction*); and AASHTO *Guide Specifications for Seismic Isolation Design*, 3rd Edition (Guide Specifications).

The seismic isolation bearing system is a key structural component of the bridge, and must function successfully during an earthquake at any time throughout the life of the bridge, while also performing reliably under service loads with no maintenance.

The Lead-Core Elastomeric (LCE) Seismic Isolation bearing as shown on the plans consists of the lead-core elastomeric energy absorbing device (isolator) bonded to the top and bottom LCE mounting plates.

In addition, all items below the sole plate such as top load plates, masonry plates, sub-base plates, concrete preparation of the grout pockets and grout pad areas, non-shrink grout and shear lug plates as well as tap bolts between the LCE top mounting plate and the top load plate and between the LCE bottom mounting plate and the sub-base plates shall be considered part of the LCE isolation bearing assembly. Contractor shall note that these isolation bearing assemblies may require significant lead-time to obtain. These six bearings work together as a system with the foundational stiffness of Piers 4 and 5.

1.1 Pre-Approved Suppliers. The Lead-Core Elastomeric (LCE) Seismic Isolation option shall be used for the six arch main span (Span 5) bearings. The structure has been analyzed and designed in accordance with Project Specific Seismic Design Criteria, AASHTO Guide Specifications for LRFD Seismic Bridge Design, and the AASHTO Guide Specifications for Seismic Isolation Design using a six Lead-Core Elastomeric (LCE) Seismic Isolation system in conjunction with the foundation stiffness of Piers 4 and 5. Approved suppliers of this system are not required to perform additional analyses. The following manufacturers have been preapproved to supply the specified isolators:

<u>Lead-Core Elastomeric Isolation Bearing:</u>

Seismic Energy Products	Dynamic Isolation Systems
518 Progress Way	885 Denmark Drive, Suite 101
Athens, TX 75751	McCarran, NV 89434
Ph. (903) 675-8571	Ph. (775) 359-3333

1.2 Alternative Suppliers. The Contractor may propose an alternate supplier. However, only isolation bearing types designated in the General Notes and the plans will be allowed. An alternate supplier shall have successfully completed a minimum of three

similar lead-core elastomeric isolation projects within the past 5 years, or demonstrate that the company has the key personnel and equipment from a former company in which these personnel successfully filled the same role and successfully met the same requirement. Written documentation supporting the qualification for a proposed alternate supplier shall be submitted a minimum of 60 days prior to beginning seismic bearing assembly design and shop drawings. This documentation shall include the plan for design and testing of the seismic bearings. Alternate suppliers are required to perform an analysis in accordance with the Guide Specification incorporating the proposed isolation system properties.

1.3 Quality Assurance / Quality Control. Fabrication of the isolation bearings shall be performed in accordance with the applicable provisions of the AASHTO *LRFD Bridge Design Specifications*, the AASHTO *LRFD Bridge Construction Specifications* and the AASHTO Guide *Specifications for Seismic Isolation Design*. Inspection and testing shall be the responsibility of the Fabricator Quality Control (FQC) staff. However, representatives of the Department can and will inspect fabrication as considered appropriate and will monitor operations of the Fabricator's FQC staff. Department inspection or testing will not relieve the Fabricator of any QC responsibilities.

1.4 Qualifications. Fabricator FQC personnel shall have a minimum of 5 years prior experience with the fabrication and testing of isolation bearings of the type being proposed for this project. The Contractor shall submit written documentation for Fabricator's FQC staff with the seismic bearing shop drawings. The Department reserves the right to suspend the fabrication work if unapproved personnel are utilized. The Contractor shall be fully liable for the additional costs resulting from the suspension of work, and no adjustments in the contract time resulting from the suspension of the work will be allowed.

1.5 Shop Drawings. Prior to fabrication, the Contractor shall submit calculations and shop drawings verifying that the proposed isolation bearings meet the design and geometric requirements of the plans and specifications. The shop drawings shall include, at a minimum:

a. Written documentation of FQC staff qualification as detailed above.

b. Calculations shall conform to the AASHTO *LRFD Bridge Design Specifications* and the Guide Specification. Seismic bearings shall be designed sufficient to meet the stiffness, seismic displacement and non-seismic load requirements specified herein. No substitutions shall be made in the materials used in the design calculations without additional calculations verifying that the new materials meet the design requirements.

c. Detail drawings of the individual isolation bearings and overall seismic bearing assemblies.

d. A complete list of material certifications for the isolation bearings including the tap bolts, masonry plates, top load plates, sub-base plates and shear lugs. Also include material literature and manufacturer's descriptive and technical literature of the isolation bearings.

2.0 MATERIALS

2.1 Lead-Core Elastomeric (LCE) Seismic Isolation. Meet the following material requirements:

a. Internal steel reinforcing plates shall, as a minimum, conform to ASTM A1011 Grade 40.

b. LCE mounting plates provided by the bearing manufacturer shall, as a minimum, conform to ASTM A572, Grade 50. LCE load plates shall be vulcanized bonded to the isolation bearing and mechanically connected to the internal lead core.

c. Exposed steel surfaces shall be protected from rust by one coat of zinc-rich primer. All exposed steel surfaces shall receive a final field coat in accordance with the plans and specifications.

d. The purity of lead shall be established from a sample of lead used in the isolators and shall demonstrate a minimum of 99% purity.

e. The elastomer shall be Grade 3 Natural Rubber.

f. Results showing performance within the stated parameters shall be provided for each elastomer formulation used in the isolators. Tests performed within the previous 12 months are acceptable for the following tests:

– Compression Set (ASTM D395) at 70°C for 22 hours:
  Maximum permissible set = 40%.

– Bond Strength (ASTM D429, Method B):
  Minimum bond strength = 40lb/in, 100% rubber tear.

– Heat Resistance (ASTM D573) at 70°C for 7 days:
  Maximum permissible change in tensile strength = -25%
  Maximum permissible change in ultimate elongation = -25%
  Maximum permissible change in durometer hardness = +10%

– Ozone Resistance (ASTM D 1149)

Representative strips of material shall be prepared in accordance with ASTM D518, Method A. The tests shall be performed at a concentration of 50±5 parts per hundred million, at 20% strain after conditioning at 38°C±1 for 100 hours. No cracks shall be visible using 7X magnification.

g. Results from tests performed on each batch of elastomer used in the isolators shall demonstrate compliance with the following requirements:

– Tensile Strength (ASTM D412):
  Minimum permissible tensile strength = 2500 psi

– Elongation at break (ASTM D412):
Minimum permissible elongation at break = 500%

– Shear Modulus at 50% Shear Strain (ASTM D4014):
Maximum permissible variation from design value=±10%

2.2 Masonry Plates, Sub-Base Plates, Top Load Plates, Shear Lug Plates. Masonry, sub-base plates and shear lug plates shall conform to M270 Grade 50W steel.

2.3 Grout for Shear Lug Pocket. Shear lug pocket shall be prepared as indicated on the plans and filled with a non-shrink grout from the Department's List of Approved Materials and conforming to KYTC Section 601.

3.0 DESIGN AND PERFORMANCE REQUIREMENTS

3.1 Seismic Acceleration & Response Spectra

All isolators shall be designed for the following criteria:

– Seismic Design Category: D
– Site Specific Design Response Spectrum: See Table 3.1a

Table 3.1a: Design Response Spectrum

Main Span West Pier 4			**Main Span East Pier 5**		
Station Range	1003+00	1003+00	**Station Range**	1008+50	1008+50
	Horizontal	**Vertical**		**Horizontal**	**Vertical**
A_{sD} (g)	0.4185	0.279	**A_{sD} (g)**	0.4403	0.294
S_{sD} (g)	1.5506	1.034	**S_{sD} (g)**	1.4835	0.989
S_{1D} (g)	0.1482	0.099	**S_{1D} (g)**	0.1578	0.105
T_m (sec)	**S_a(g)**	**S_a(g)**	**T_m (sec)**	**S_a(g)**	**S_a(g)**
0.001	0.419	0.279	0.001	0.440	0.294
0.150	1.551	1.034	0.130	1.484	0.989
0.410	1.551	1.034	0.430	1.484	0.989
0.500	0.691	0.461	0.500	0.918	0.612
0.600	0.402	0.268	0.600	0.533	0.356
0.700	0.308	0.205	0.700	0.318	0.212
0.800	0.269	0.179	0.800	0.269	0.179
0.900	0.239	0.160	0.900	0.239	0.160
1.000	0.215	0.144	1.000	0.215	0.144
1.100	0.196	0.131	1.100	0.196	0.131
1.200	0.179	0.120	1.200	0.179	0.120
1.300	0.166	0.110	1.300	0.166	0.110
1.400	0.154	0.103	1.400	0.154	0.103
1.500	0.144	0.096	1.500	0.144	0.096
1.700	0.127	0.084	1.700	0.127	0.084
1.800	0.120	0.080	1.800	0.120	0.080
2.000	0.108	0.072	2.000	0.108	0.072
2.200	0.098	0.065	2.200	0.098	0.065
2.400	0.090	0.060	2.400	0.090	0.060
2.600	0.083	0.055	2.600	0.083	0.055
2.800	0.077	0.051	2.800	0.077	0.051
3.000	0.072	0.048	3.000	0.072	0.048

Main Span West Pier 4			Main Span East Pier 5		
Station Range	1003+00	1003+00	Station Range	1008+50	1008+50
	Horizontal	Vertical		Horizontal	Vertical
3.200	0.067	0.045	3.200	0.067	0.045
3.400	0.063	0.042	3.400	0.063	0.042
3.600	0.060	0.040	3.600	0.060	0.040
3.800	0.057	0.038	3.800	0.057	0.038
4.000	0.054	0.036	4.000	0.054	0.036
4.200	0.051	0.034	4.200	0.051	0.034
4.400	0.049	0.033	4.400	0.049	0.033
4.600	0.047	0.031	4.600	0.047	0.031
4.800	0.045	0.030	4.800	0.045	0.030
5.000	0.043	0.029	5.000	0.043	0.029
5.200	0.041	0.028	5.200	0.041	0.028
5.400	0.040	0.027	5.400	0.040	0.027
5.600	0.038	0.026	5.600	0.038	0.026
5.800	0.037	0.025	5.800	0.037	0.025
6.000	0.036	0.024	6.000	0.036	0.024
6.200	0.035	0.023	6.200	0.035	0.023

3.2 Service Loads.

a. Dead and live load reactions as provided in Table 3.2a:

Table 3.2a: Dead and Live Load (per bearing)

Location	Assembly Type	Dead Load (kips)	Live Load (kips)	Live Load Rotation (rad)
Pier 4	A			
Pier 4	B			
Pier 5	A			
Pier 5	B			

b. Service transverse loads as provided in Table 3.2b and 3.2c:

Table 3.2b: Unfactored Service Transverse Loads (per bearing)*

Location	Assembly Type	Wind (kips)	Max. deflection due to Wind (inches)	Wind on Live (kips)	Braking Force (kips)
Pier 4	A				
Pier 4	B				
Pier 5	A				
Pier 5	B				

* Based on a Keff value of XXX (k/in)

c. Service longitudinal loads as provided in Table 3.2c:

Table 3.2c: Unfactored Service Longitudinal Loads (per bearing)*

Location	Assembly Type	Wind (kips)	Max. deflection due to Wind (inches)	Wind on Live (kips)	Braking Force (kips)
Pier 4	A*				
Pier 4	B*				
Pier 5	A*				
Pier 5	B*				

* Based on a Keff value of XXX (k/in)

d. Expansion and contraction as shown in Table 3.2d:

Table 3.2d: S+T Movement and Demands (per bearing)**

Location	Assembly Type	S+T (inches)	Max. Force (Kips)
Pier 4	A		
Pier 4	B		
Pier 5	A		
Pier 5	B		

** Based on a Keff value of XXX (k/in)

e. Seismic displacement and demands provided in Table 3.2e:

Table 3.2e: Maximum Allowable Seismic Force and Displacement (per Bearing) (EQ)***

Location	Assembly Type	Longitudinal		Transverse	
		Max Force (k)	Max. Displ. (in)	Max Force (k)	Max. Displ. (in)
Pier 4	A				
Pier 4	B				
Pier 5	A				
Pier 5	B				

*** Based on a Keff value of XXX (k/in) and damping ratio of XX%

4.0 FABRICATION

4.1 General. Fabrication shall be in accordance with this Special Note and AASHTO *LRFD Construction*.

4.2 Welding. All welding shall conform to and all welders shall be qualified in accordance with the requirements of the current AASHTO/AWS D1.5M/D1.5 *Bridge Welding Code*.

4.3 Masonry, Sub-Base, Top Load and Shear Lug Plate Coats. Shall be cleaned and painted per the project general notes.

4.4 Other Coatings. All mill scale shall be removed from steel plates by means of abrasive blasting in accordance with SSPC-SP10. The plate surfaces above and below the polyether urethane disk shall be abrasive blast cleaned to a near white condition as defined in SSPC-SP10. The blast profile shall be jagged rather than "peened".

The bearing assemblies shall be shop painted in accordance with Standard Specifications Section 821 and paint manufacturer's recommendations. Galvanizing and field painting will not be permitted. The surfaces to be painted or metalized shall be shown in the shop drawings. The following areas are not to be coated: (a) any PTFE, Polymer urethane and stainless steel surfaces; (b) shear resisting mechanism and anchor hole; (c) any area to be field welded.

Connection bolts and washers shall be mechanically galvanized as described in AASHTO M 154.

5.0 SAMPLING, TESTING & INSPECTION

5.1 Testing and Inspection for Fabricator Quality Control. Upon completion of fabrication and testing, the contractor shall submit all material certifications, certificates of compliance and test results indicating conformance with the contract plans, specifications and approved shop drawings. Contractor shall submit both prototype tests and QC test results as detailed in Sections 5.3 and 5.4 below.

5.2 Fabrication Tolerances. The tolerances on isolator dimensions prior to testing shall be as follows:

External Plan Dimensions	± ¼ inch
Overall height	± ¼ inch
Variation between top and bottom surface	≤ 0.005 radian
Variation of sides from theoretical	± ¼ inch
Flatness of external plates	± 1/16 in. per 36 in.

Each isolator shall be marked with the isolator serial number specified by the manufacturer.

5.3 Prototype Tests. Isolation system suppliers who have submitted characterization test results by means of the evaluation findings of the Highway Innovative Technology Evaluation Center shall submit prototype test results in accordance with Section 13.2 and 13.3 of the AASHTO *Guide Specifications*.

Prototype tests shall be performed on the isolators fabricated for the subject project. Testing of similarly sized or reduced scale specimens is not allowed. As per section 13.2 of the AASHTO *Guide Specifications*, prototype tests shall be performed on a minimum of two isolators of each type shown in this specification. However, if tests of any isolator fail to meet the requirements of the AASHTO *Guide Specifications*; then all isolators of that type shall be tested and any isolators that fail to meet the requirements shall be rejected. Fabrication of the remaining bearings shall not be continued until prototype test results are approved by the Engineer.

5.4 Quality Control Tests. Each isolator shall be tested and evaluated in accordance with the requirements of the AASHTO *Guide Specifications*, Section 15.2. Any bearing that fails to satisfy the requirements shall be rejected. Alternative suppliers of lead core elastomeric isolators, if approved, must satisfy these testing requirements.

6.0 IDENTIFICATION, STORAGE & HANDLING. Every bearing shall have the project identification number, lot number and individual bearing number indelibly marked with ink on a side that will be visible after erection.

Bearing assemblies shall be handled by their bottom surfaces only, and shall not be lifted by their tops, sides and/or shipping bands. Completed bearings shall be individually banded in the upright position. When in storage the bearings shall be kept banded, wrapped and secured in a clean, dry and upright position. Packaging shall be adequate to prevent damage from impact as well as from dust and moisture contamination during shipping and storage.

At no time prior to completion of the project, may any bearing be disassembled without authorization from the Bearing Supplier.

7.0 INSTALLATION

7.1 Preparing Concrete Bearing Areas. The sides and bottom of the bearing lug grout pocket shall be cleaned of laitance and loose and foreign material prior to setting masonry plates. The Contractor shall mark the location of the masonry plates in the pockets (by plan station and offset.) Masonry plates on each pier shall be set by template to the indicated elevation and alignment and positively secured to the top of the pier for grout placement.

7.2 Substructure Survey. After preparing concrete surface and setting masonry plates, the Contractor shall perform a horizontal and vertical control survey of the center and corner of each plate. The Engineer will inspect the bearing components to assure that they are level and parallel to with ± 0.005 radians. Any deviations in excess of the allowed tolerances shall be corrected.

7.3 Grouting Lug Pocket. Prior to grouting, contact surfaces of pocket shall be coated with concrete bonding agent. Grout shall be place into pocket under pressure until the voids are completely filled and grout exits the vent holes on the top of the masonry plate and overflows the perimeter of the masonry plate. Strike off excess grout and provide a clean bearing surface for the installation of the bearing components. Completely remove all overflow grout located above the top-of-bearing elevation. Properly collect and dispose of all overflow grout in an environmentally safe manner.

7.4 Seismic Bearing Assemblies. Care shall be taken during storage and installation of the isolators to prevent damage to the isolator or coating materials on the steel.

The bearing assemblies shall be installed level in exact position (true roadway station and offset, or as adjusted by the Engineer due to substructure location out of tolerance) and the bottom LCE mounting plate shall have full and even bearing upon the sub-base plates; Bearing sub-base plates shall have full and even bearing upon and field welded to masonry plates. Any superstructure gradients are accommodated by tapered sole plates which are part of the arch tie girders or end floor beams. The top load plate shall be in full contact with the sole plates and shall be welded to sole plates. The top LCE mounting plate shall have full and even contact with the top load plates.

Connections shall be adjusted as necessary, under the direction of the Engineer, to obtain full contact. All grout holes in the masonry plates shall be covered by the sub-base plate after field welding the plates together.

Contractor shall take care to minimize heat build-up in bearing. Temperature in nearest bearing load plate shall be kept below 200°F. Multiple weld passes may be required.

Contractor shall provide a complete record of the location of each installed isolator, by serial number, to both the Engineer and the manufacturer.

There shall be no obstructions, including bolt extensions, which prevent the isolators from deforming horizontally in any direction. The area around each isolator shall be cleaned of all debris and construction material at the completion of the contract.

7.5 Arch Erection. The seismic bearings shall be installed as outlined in arch erection and camber given in the Special Note for Steel Erection – Arch Span.

8.0 MEASUREMENT. The Department will pay for "Seismic Isolation Bearing - Type A or - Type B" at the contract unit price per each bearing assembly. This will constitute full compensation for all costs associated with preparing concrete surfaces; installing and grouting shear lugs; and designing, fabricating, testing and installing the seismic bearing assemblies (including all steel plates below the tapered sole plate).

9.0 PAYMENT. The Department will pay for completed and accepted quantities under the following:

Code	Pay Item	Pay Unit
24612EC	SEISMIC ISOLATION BEARING – TYPE A	EACH
24613EC	SEISMIC ISOLATION BEARING – TYPE B	EACH

The Department will consider payment as full compensation for all work required under this Special Note.

SPECIAL NOTE FOR SEISMIC ISOLATION BEARINGS - FRICTION

This Special Note applies to six Friction Seismic Isolation bearings for Span 5 indicated on the plans. It supplements information provided in the standard specifications. Where a conflict exists between this Special Note and the standard specifications, the provisions herein shall govern.

1.0 DESCRIPTION. This work consists of designing, fabricating, testing, delivering and installing six Friction Seismic Isolation Bearing assemblies at the locations shown on the Contract Plans in accordance with: this special note; KYTC Standard Specifications for Road and Bridge Construction, 2012 Edition (KYTC); AASHTO *LRFD Bridge Design Specifications*, 6th Edition, 2012 *(*AASHTO *LRFD Design*); AASHTO *LRFD Bridge Construction Specifications*, 2010 (AASHTO *LRFD Construction*); and AASHTO *Guide Specifications for Seismic Isolation Design*, 3rd Edition (Guide Specifications).

The seismic isolation bearing system is a key structural component of the bridge, and must function successfully during an earthquake at any time throughout the life of the bridge, while also performing reliably under service loads with no maintenance.

The friction seismic isolation bearing as shown on the plans is a flat sliding friction type with rotational characteristics of a polyurethane disk bearing and stabilizing polyurethane springs similar to or equal to Eradiquake Isolation Bearings with top and bottom load plates, keeper assembly plates and keeper assembly tap bolts designed and tested to fracture at the specified a demand corresponding to a 1000 year return event. These six bearings work together as a system with the foundational stiffness of Piers 4 and 5.

In addition, all items below the sole plate such as masonry plates, sub-base plates, concrete preparation of the grout pockets and grout pad areas, non-shrink grout and shear lug plates as well as tap bolts between the bottom load plates and the sub-base plates shall be considered part of the friction seismic isolation bearing assembly. Contractor shall note that these isolation bearing assemblies may require significant lead-time to obtain.

1.1 Pre-Approved Suppliers. The Friction Seismic Isolation Bearing option shall be used for the six arch main span (Span 5) bearings. The structure has been analyzed and designed in accordance with Project Specific Seismic Design Criteria, AASHTO Guide Specifications for LRFD Seismic Bridge Design, and the AASHTO Guide Specifications for Seismic Isolation Design using a six bearing friction isolation system in conjunction with the foundation stiffness of Piers 4 and 5. Approved suppliers of this system are not required to perform additional analyses. The following manufacturers have been preapproved to supply the specified isolators:

<u>Friction Seismic Isolation Bearing:</u>

R. J. Watson Bridge & Structural Engineered Systems
11035 Walden Avenue
Alden, NY 14004
Ph. (716) 901-7020

1.2 Alternative Suppliers. The Contractor may propose an alternate supplier. However, only isolation bearing types designated in the General Notes and the plans will be allowed. An alternate supplier shall have successfully completed a minimum of three

similar flat sliding friction isolation projects within the past 5 years, or demonstrate that the company has the key personnel and equipment from a former company in which these personnel successfully filled the same role and successfully met the same requirement. Written documentation supporting the qualification for a proposed alternate supplier shall be submitted a minimum of 60 days prior to beginning seismic bearing assembly design and shop drawings. This documentation shall include the plan for design and testing of the seismic bearings. Alternate suppliers are required to perform an analysis in accordance with the Guide Specification incorporating the proposed isolation system properties.

1.3 Quality Assurance / Quality Control. Fabrication of the isolation bearings shall be performed in accordance with the applicable provisions of the AASHTO *LRFD Bridge Design Specifications*, the AASHTO *LRFD Bridge Construction Specifications* and the AASHTO Guide *Specifications for Seismic Isolation Design*. Inspection and testing shall be the responsibility of the Fabricator Quality Control (FQC) staff. However, representatives of the Department can and will inspect fabrication as considered appropriate and will monitor operations of the Fabricator's FQC staff. Department inspection or testing will not relieve the Fabricator of any QC responsibilities.

1.4 Qualifications. Fabricator FQC personnel shall have a minimum of 5 years prior experience with the fabrication and testing of isolation bearings of the type being proposed for this project. The Contractor shall submit written documentation for Fabricator's FQC staff with the seismic bearing shop drawings. The Department reserves the right to suspend the fabrication work if unapproved personnel are utilized. The Contractor shall be fully liable for the additional costs resulting from the suspension of work, and no adjustments in the contract time resulting from the suspension of the work will be allowed.

1.5 Shop Drawings. Prior to fabrication, the Contractor shall submit calculations and shop drawings verifying that the proposed isolation bearings meet the design and geometric requirements of the plans and specifications. The shop drawings shall include, at a minimum:

a. Written documentation of FQC staff qualification as detailed above.

b. Calculations shall conform to the AASHTO *LRFD Bridge Design Specifications* and the Guide Specification. Seismic bearings shall be designed sufficient to meet the stiffness, seismic displacement and non-seismic load requirements specified herein. No substitutions shall be made in the materials used in the design calculations without additional calculations verifying that the new materials meet the design requirements.

c. Detail drawings of the individual isolation bearings and overall seismic bearing assemblies.

d. A complete list of material certifications for the isolation bearings including the keeper and keep assembly tap bolts, masonry plates, top and bottom load plates, sub-base plates and shear lugs. Also include material literature and manufacturer's descriptive and technical literature of the isolation bearings.

2.0 MATERIALS

2.1 Friction Seismic Isolation Bearing. Meet the following material requirements:

a. **Stainless Steel:** Stainless steel shall conform to the requirements of ASTM A240, Type 304, and AASHTO *LRFD Construction* 18.1.2.5. Higher grades of stainless are permissible. The minimum thickness of the stainless steel shall be 13 gauge (0.094 inches) or as indicated in the Contract Plans. The stainless steel connection to the carbon steel attachment plate shall be seal welded to form an effective moisture seal.

b. **Polytetrafluoroethylene** (PTFE). PTFE sheet shall meet the requirements of AASHTO *LRFD Construction* 18.8.2.5 and be manufactured from pure virgin unfilled PTFE resin conforming to the material requirements of AASHTO *LRFD Construction* 18.8.2.

PTFE sheet shall be dimpled and lubricated, with dimples satisfying the depth, diameter and distribution requirements of AASHTO *LRFD Design* 14.7.2. Unless indicated otherwise in the Contract Plans, the minimum thickness of the PTFE sheet shall be 0.188 in. when the maximum dimension of the PTFE is less than or equal to 24 inches and 0.25 in. when the maximum dimension of the PTFE is greater than 24 in.

c. **Adhesive.** The Bearing Supplier shall use a uniform layer of epoxy adhesive to bond the PTFE to the recessed bearing plate below it. Epoxy Adhesive shall conform to AASHTO *LRFD Construction* 18.8.2.4 and shall be stable from -100°F to +250°F. PTFE bonding surface shall be prepared in accordance with AAHTO *LRFD Construction* 18.8.2.10

The bearing supplier shall supply non-project specific test results showing that their standard epoxy connection typically achieves adhesive peel strengths of 20 lb. per inch between the PTFE material and carbon steel plate when tested per ASTM D429, Method B or ASTM D903.

d. **Polyether Urethane.** Polyether urethane shall conform to AASHTO *LRFD Construction* 18.3.2.8.

2.3 Masonry Plates, Sub-Base Plates, Shear Lug Plates. Masonry, sub-base plates and shear lug plates shall conform to M270 GRADE 50W steel.

2.4 Friction Bearing Plates. All steel bearing plates provided by the bearing manufacturer, except stainless steel, shall conform to ASTM A572 (Grade 50) steel.

2.5 Grout for Shear Lug Pocket. Shear lug pocket shall be prepared as indicated on the plans and filled with a non-shrink grout from the Department's List of Approved Materials and conforming to KYTC Section 601.

3.0 DESIGN AND PERFORMANCE REQUIREMENTS

3.1 Seismic Acceleration & Response Spectra

All isolators shall be designed for the following criteria:

- Seismic Design Category: D
- Site Specific Design Response Spectrum: See Table 3.1a

Table 3.1a: Design Response Spectrum

Main Span West Pier 4			**Main Span East Pier 5**		
Station Range	1003+00	1003+00	**Station Range**	1008+50	1008+50
	Horizontal	**Vertical**		**Horizontal**	**Vertical**
A_{sD} (g)	0.4185	0.279	**A_{sD} (g)**	0.4403	0.294
S_{sD} (g)	1.5506	1.034	**S_{sD} (g)**	1.4835	0.989
S_{1D} (g)	0.1482	0.099	**S_{1D} (g)**	0.1578	0.105
T_m (sec)	**S_a(g)**	**S_a(g)**	**T_m (sec)**	**S_a(g)**	**S_a(g)**
0.001	0.419	0.279	0.001	0.440	0.294
0.150	1.551	1.034	0.130	1.484	0.989
0.410	1.551	1.034	0.430	1.484	0.989
0.500	0.691	0.461	0.500	0.918	0.612
0.600	0.402	0.268	0.600	0.533	0.356
0.700	0.308	0.205	0.700	0.318	0.212
0.800	0.269	0.179	0.800	0.269	0.179
0.900	0.239	0.160	0.900	0.239	0.160
1.000	0.215	0.144	1.000	0.215	0.144
1.100	0.196	0.131	1.100	0.196	0.131
1.200	0.179	0.120	1.200	0.179	0.120
1.300	0.166	0.110	1.300	0.166	0.110
1.400	0.154	0.103	1.400	0.154	0.103
1.500	0.144	0.096	1.500	0.144	0.096
1.700	0.127	0.084	1.700	0.127	0.084
1.800	0.120	0.080	1.800	0.120	0.080
2.000	0.108	0.072	2.000	0.108	0.072
2.200	0.098	0.065	2.200	0.098	0.065
2.400	0.090	0.060	2.400	0.090	0.060
2.600	0.083	0.055	2.600	0.083	0.055
2.800	0.077	0.051	2.800	0.077	0.051
3.000	0.072	0.048	3.000	0.072	0.048
3.200	0.067	0.045	3.200	0.067	0.045
3.400	0.063	0.042	3.400	0.063	0.042
3.600	0.060	0.040	3.600	0.060	0.040
3.800	0.057	0.038	3.800	0.057	0.038
4.000	0.054	0.036	4.000	0.054	0.036
4.200	0.051	0.034	4.200	0.051	0.034
4.400	0.049	0.033	4.400	0.049	0.033
4.600	0.047	0.031	4.600	0.047	0.031
4.800	0.045	0.030	4.800	0.045	0.030
5.000	0.043	0.029	5.000	0.043	0.029
5.200	0.041	0.028	5.200	0.041	0.028
5.400	0.040	0.027	5.400	0.040	0.027
5.600	0.038	0.026	5.600	0.038	0.026
5.800	0.037	0.025	5.800	0.037	0.025
6.000	0.036	0.024	6.000	0.036	0.024
6.200	0.035	0.023	6.200	0.035	0.023

3.2 Service Loads.

a. Dead and live load reactions as provided in Table 3.2a:

Table 3.2a: Dead and Live Load (per bearing)

Location	Assembly Type	Dead Load (kips)	Live Load (kips)	Live Load Rotation (rad)
Pier 4	A			
Pier 4	B			
Pier 5	A			
Pier 5	B			

b. Service transverse loads as provided in Table 3.2b and 3.2c:

Table 3.2b: Unfactored Service Transverse Loads (per bearing)

Location	Assembly Type	Wind (kips)	Max. deflection due to Wind (inches)	Wind on Live (kips)	Braking Force (kips)
Pier 4	A				
Pier 4	B				
Pier 5	A				
Pier 5	B				

c. Service longitudinal loads as provided in Table 3.2c:

Table 3.2c: Unfactored Service Longitudinal Loads (per bearing)

Location	Assembly Type	Wind (kips)	Max. deflection due to Wind (inches)	Wind on Live (kips)	Braking Force (kips)
Pier 4	A				
Pier 4	B				
Pier 5	A				
Pier 5	B				

d. Expansion and contraction as shown in Table 3.2d:

Table 3.2d: S+T Movement and Demands (per bearing)

Location	Assembly Type	S+T (inches)	Max. Force (Kips)
Pier 4	A		
Pier 4	B		
Pier 5	A		
Pier 5	B		

e. Seismic displacement and demands provided in Table 3.2e:

Table 3.2e: Seismic Displacement and Demands and Displacement (per Bearing) (EQ)

Location	Assembly Type	Longitudinal		Transverse	
		Max Force (k)	Max. Displ. (in)	Max Force (k)	Max. Displ. (in)
Pier 4	A				
Pier 4	B				
Pier 5	A				
Pier 5	B				

Type B bearings at Main Span Piers 4 and 5 are designed to allow failure of transverse guide bars under transverse seismic load of XXX kips and Friction Isolation Bearing – Type A bearings at Main Span Piers 4 and 5 are designed to allow failure of longitudinal guide bars under longitudinal seismic load of XXX kips. During bearing testing, the bearing yield point target is 0.XX inches displacement at XXX kips.

3.3 Friction Seismic Isolation Bearings. All sliding friction isolators shall be designed for the following additional criteria:

Table 3.4a: Bearing Characteristics – Seismic

Location	Assembly Type	Direction	D	dmax	Keff	Kd	EDC	DR
Pier 4	A	L						
Pier 4	B	T						
Pier 5	A	L						
Pier 5	B	T						

L = Longitudinal
T = Transverse
D = Maximum dead load, unfactored, plus seismic live load, if applicable, (kips)
dmax = Maximum seismic displacement across isolator (in.)
Keff = Effective stiffness at dmax (kips/in.)
Kd = Post-elastic stiffness (kips/in.)
EDC = Energy dissipation capacity per cycle at dmax (kips-in.)
DR = Equivalent Viscous Damping Ratio

4.0 FABRICATION

4.1 General. Fabrication shall be in accordance with this Special Note and AASHTO *LRFD Construction*.

4.2 Welding. All welding shall conform to and all welders shall be qualified in accordance with the requirements of the current AASHTO/AWS D1.5M/D1.5 *Bridge Welding Code*.

4.3 Masonry, Sub-Base and Shear Lug Plate Coats. Shall be cleaned and painted per the project general notes.

4.4 Other Coatings. All mill scale shall be removed from steel plates by means of abrasive blasting in accordance with SSPC-SP10. The plate surfaces above and below the polyether urethane disk shall be abrasive blast cleaned to a near white condition as defined in SSPC-SP10. The blast profile shall be jagged rather than "peened".

The bearing assemblies shall be shop painted in accordance with Standard Specifications Section 821 and paint manufacturer's recommendations. Galvanizing and field painting will not be permitted. The surfaces to be painted or metalized shall be shown in the shop drawings. The following areas are not to be coated: (a) any PTFE, Polymer urethane and stainless steel surfaces; (b) shear resisting mechanism and anchor hole; (c) any area to be field welded.

Connection bolts and washers shall be mechanically galvanized as described in AASHTO M 154.

5.0 SAMPLING, TESTING & INSPECTION

5.1 Testing and Inspection for Fabricator Quality Control. Upon completion of fabrication and testing, the contractor shall submit all material certifications, certificates of compliance and test results indicating conformance with the contract plans, specifications and approved shop drawings. Contractor shall submit both prototype tests and QC test results as detailed in Sections 5.3 and 5.4 below.

5.2 Fabrication Tolerances. The tolerances on isolator dimensions prior to testing shall be as follows:

External Plan Dimensions	± ¼ inch
Overall height	± ¼ inch
Variation between top and bottom surface	≤ 0.005 radian
Variation of sides from theoretical	± ¼ inch
Flatness of external plates	± 1/16 in. per 36 in.

Each isolator shall be marked with the isolator serial number specified by the manufacturer.

5.3 Prototype Tests. Isolation system suppliers who have submitted characterization test results by means of the evaluation findings of the Highway Innovative Technology Evaluation Center shall submit prototype test results in accordance with Section 13.2 and 13.3 of the AASHTO *Guide Specifications*.

Prototype tests shall be performed on the isolators fabricated for the subject project. Testing of similarly sized or reduced scale specimens is not allowed. As per section 13.2 of the AASHTO *Guide Specifications*, prototype tests shall be performed on a minimum of two isolators of each type shown in this specification. However, if tests of any isolator fail to meet the requirements of the AASHTO *Guide Specifications*; then all isolators of that type shall be tested and any isolators that fail to meet the requirements

shall be rejected. Fabrication of the remaining bearings shall not be continued until prototype test results are approved by the Engineer.

The keeper assemblies tap bolts which are designed to break at a designated transverse and longitudinal force shall be tested to the breaking point to within a XX% tolerance.

5.4 Quality Control Tests. Each isolator shall be tested and evaluated in accordance with the requirements of the AASHTO *Guide Specifications*, Section 15.2. Any bearing that fails to satisfy the requirements shall be rejected. Alternative suppliers of lead core elastomeric isolators, if approved, must satisfy these testing requirements.

6.0 IDENTIFICATION, STORAGE & HANDLING. Every bearing shall have the project identification number, lot number and individual bearing number indelibly marked with ink on a side that will be visible after erection.

Bearing assemblies shall be handled by their bottom surfaces only, and shall not be lifted by their tops, sides and/or shipping bands. Completed bearings shall be individually banded in the upright position. When in storage the bearings shall be kept banded, wrapped and secured in a clean, dry and upright position. Packaging shall be adequate to prevent damage from impact as well as from dust and moisture contamination during shipping and storage.

At no time prior to completion of the project, may any bearing be disassembled without authorization from the Bearing Supplier.

7.0 INSTALLATION

7.1 Preparing Concrete Bearing Areas. The sides and bottom of the bearing lug grout pocket shall be cleaned of laitance and loose and foreign material prior to setting masonry plates. The Contractor shall mark the location of the masonry plates in the pockets (by plan station and offset.) Masonry plates on each pier shall be set by template to the indicated elevation and alignment and positively secured to the top of the pier for grout placement.

7.2 Substructure Survey. After preparing concrete surface and setting masonry plates, the Contractor shall perform a horizontal and vertical control survey of the center and corner of each plate. The Engineer will inspect the bearing components to assure that they are level and parallel to with ± 0.005 radians. Any deviations in excess of the allowed tolerances shall be corrected.

7.3 Grouting Lug Pocket. Prior to grouting, contact surfaces of pocket shall be coated with concrete bonding agent. Grout shall be place into pocket under pressure until the voids are completely filled and grout exits the vent holes on the top of the masonry plate and overflows the perimeter of the masonry plate. Strike off excess grout and provide a clean bearing surface for the installation of the bearing components. Completely remove all overflow grout located above the top-of-bearing seat elevation. Properly collect and dispose of all overflow grout in an environmentally safe manner.

7.4 Seismic Bearing Assemblies. Care shall be taken during storage and installation of the isolators to prevent damage to the isolator or coating materials on the steel.

The bearing assemblies shall be installed level in exact position (true roadway station and offset, or as adjusted by the Engineer due to substructure location out of

tolerance) and the bottom load plate shall have full and even bearing upon the sub-base plates; Bearing sub-base plates shall have full and even bearing upon and field welded to masonry plates. Any superstructure gradients are accommodated by tapered sole plates which are part of the arch tie girders or end floor beams. The top load plate shall be in full contact with the sole plates and shall be welded to sole plates. Connections shall be adjusted as necessary, under the direction of the Engineer, to obtain full contact. All grout holes in the masonry plates shall be covered by the sub-base plate after field welding the plates together.

Contractor shall take care to minimize heat build-up in bearing. Temperature in nearest bearing load plate shall be kept below 200°F. Multiple weld passes may be required.

Contractor shall provide a complete record of the location of each installed isolator, by serial number, to both the Engineer and the manufacturer.

There shall be no obstructions, including bolt extensions, which prevent the isolators from deforming horizontally in any direction. The area around each isolator shall be cleaned of all debris and construction material at the completion of the contract.

7.5 Arch Erection. The seismic bearings shall be installed as outlined in arch erection and camber given in the Special Note for Steel Erection – Arch Span.

8.0 MEASUREMENT. The Department will pay for "Seismic Isolation Bearing - Type A or - Type B" at the contract unit price per each bearing assembly. This will constitute full compensation for all costs associated with preparing concrete surfaces; installing and grouting shear lugs; and designing, fabricating, testing and installing the seismic bearing assemblies (including all steel plates below the tapered sole plate).

9.0 PAYMENT. The Department will pay for completed and accepted quantities under the following:

Code	Pay Item	Pay Unit
24612EC	SEISMIC ISOLATION BEARING – TYPE A	EACH
24613EC	SEISMIC ISOLATION BEARING – TYPE B	EACH

The Department will consider payment as full compensation for all work required under this Special Note.

SPECIAL NOTE FOR SEISMIC DAMPERS
Marshall/Trigg County US-68 over Kentucky Lake
Item Number 01-180.70; Drawing No. 24686

1.0 DESRIPTION AND SCOPE OF WORK

1.1 DESCRIPTION: Furnish and install completed fluid viscous damping devices, including mounting pins and brackets, at the locations shown on the plans in accordance with these specifications and the *AASHTO LRFD Bridge Design and Construction Specifications.*

A. WORK IN THIS SECTION: Principal items include:

1. Preparation of shop drawings, test reports, designing, fabrication, testing, handling and shipping to the site.

2. Extent of fabrication of Viscous Damping Devices (VDD) work of this section is indicated by the requirements of this section.

3. Production Dampers: Provide Viscous Damping Devices (dampers), referred to herein as "Production Dampers" in accordance with the specifications.

2.0 EXPERIENCE REQUIREMENTS AND SUBMITTALS

2.1 SUBMITTALS:

A. GENERAL: All submittals shall be made as directed by the engineer of record.

B. SHOP DRAWINGS: Submit Shop Drawings for:

1. Each and every VDD type indicating dimensions and weights. Submit prior to delivery.
2. VDD mounting pins.
3. Mounting brackets.

C. PRODUCT DATA:

1. VDD: Product Data shall include, but shall not be limited to manufacturer's standard product specifications, a list of production history for seismic dampers, and installation instructions.
2. Paint: Submit manufacturer's literature and data.

D. CERTIFICATIONS: Submit the following documents, written and signed by the Quality Assurance Manager of the vendor.

1. A Certificate of Conformance (C of C) stating that all testing equipment has been checked for accuracy by appropriate standards for the purpose of this specification and that all mill test reports for all steel to be used are on file at the vendor facility.

E. INSPECTION AND TEST REPORTS: Submit the following test reports, written and signed by testing agency approved by the engineer of record.

1. Production VDD Test Reports: Submit test data for each production VDD within fourteen (14) calendar days after the completion of testing of the subject VDD.
2. Final VDD Test Report: Submit the Final VDD Report, as described in this Section, within twenty-eight (28) calendar days after the completion of all production VDD testing.

F. PROPOSED TEST PROCEDURES: Submit annotated and drafted illustrations of all proposed test apparatus and procedures for tests required by this Section. Such illustrations shall be submitted and approved by the engineer of record and/or architect prior to the commencement of any testing.

G. WARRANTIES AND GUARANTEES: A written warranty of not less than 35 years shall be provided with the cost proposal along with certification that a maintenance plan does not have to be purchased to activate the warranty. The manufacturer of the VDD's specified herein shall have manufactured VDD's of more than 150 kips output for a minimum of 20 years at the same manufacturing site proposed to manufacture the VDD's for this project.

2.2 EXPERIENCE

PREQUALIFICATION REQUIREMENTS: Damper manufacturers must submit the following test reports for qualification to bid. These reports must be approved by the structural engineer of record and are to be conducted and published by one of three internationally recognized seismic research organizations, the Highway Innovative Technology Evaluation Council (HITEC), the Multidisciplinary Center for Earthquake Engineering Research (MCEER) in Buffalo, New York, USA or the National Center for Research on Earthquake Engineering (NCREE) in Taipei, Taiwan.

1. A published test report showing the dynamic characteristics of the proposed VDD's. This report shall include force-displacement and force-velocity plots and shall be used to demonstrate the independence of the proposed VDD's to temperature, frequency and cyclic degradation.
2. A published report showing shake table test results for the proposed VDD's utilizing the proposed VDD's in various levels of multi-story scale model buildings, one of steel frame and one of reinforced concrete construction.
3. A list of ten or more projects where VDD's have been installed in a structure for seismic protection. For each project, the VDD's shall have provided a minimum of one year satisfactory service.

3.0 VISCOUS DAMPER FUNCTION AND CONSTRUCTION

3.1 FUNCTION

A. FUNCTION: The VDD's shall provide an output force in either tension or compression that is directly proportional to the relative velocity between the two ends of the dampers. The damper output force varies only with velocity, and does not change with damper stroke position or orientation angle. The function of the dampers is to absorb earthquake energy, thereby reducing or eliminating damage to the structure when an earthquake occurs.

B. FLUID MEDIUM: The unit shall use inert silicone fluid as the operating fluid medium which shall comply with U.S. Federal Standard VV-D-1078.

C. FLUID EXPANSION COMPENSATION: The unit shall contain provisions to allow for thermal expansion and contraction of the fluid medium to prevent excessive buildup of internal high pressure or vacuum pressure.

D. SERVICING PROVISIONS: The dampers shall be maintenance and service free over a period of at least 35 years and preferably over the expected life of the structure. This means that no inspection, or fluid level verification, or refilling or replacement of fluid or any other parts shall be needed on any basis whatsoever. The dampers shall be designed and constructed so that installation, removal, or replacement, if necessary, shall be a simple process not requiring any special tools or methods.

E. ADJUSTMENT: The unit shall be designed to provide for a length adjustment of plus or minus 0.25 inch.

F. DIMENSIONS: The overall dimensions of the unit shall be held to a minimum consistent with the requirements of this specification, and in no case shall they exceed the dimensions specified in the plans.

3.2 CONSTRUCTION

A. GENERAL: The VDD unit shall be of corrosion protected construction with stainless steel piston rod internally mounted.

B. DESIGN LOADS

1. Axial Design Load: The maximum axial design loads at the respective end bents and arch piers shall be 330 kips and 275 kipd tension or compression with the rod fully extended, retracted, or at any intermediate point.
2. Lateral Design Loads: The unit shall be designed to withstand a lateral acceleration of 1 g in any direction in any position of rod extension/retraction.

3. Fluid Pressure: The unit shall be designed to withstand the following internal pressure:

a. Proof: 200 percent of maximum operating pressure.

b. Burst: 300 percent of maximum operating pressure, but not less than 20,000 psi.

4. Factors of Safety: Minimum factors of safety for the unit shall be 2.0 limit and 2.5 ultimate. The unit shall be such that no yielding will result from the application of limit loads and no failure will result from application of ultimate loads. Limit and ultimate loads shall include the effects of load factors included herein.

3.3 PERFORMANCE

A. DAMPING COEFFICIENT: The unit shall operate with a damping coefficient of, 20 kip*sec/in at end bents and 20 kip*sec/in at arch piers, in both directions of travel shown as C in Figure 1. The normal operating force developed by the unit over the design range of velocity shall always fall within the envelope as shown in Figure 1.

B. DUTY CYCLES: The unit shall be designed to the amplitude, frequency and time requirements of the following wind load and seismic loading duty cycles.

1. Wind Load Duty Cycle: 0 to 0.25 in. amplitude at 1 cps for 300,000 cycles per year.

2. Seismic Loading Duty Cycle: 1 inch mean amplitude (2 inches peak amplitude) at 0.75 cps for 5 cycles (average) per year.

C. MAXIMUM/MINIMUM OPERATING TEMPERATURES: The unit shall be capable of operating at the energy levels, time and the environmental conditions specified herein, without degradation of performance or life as a result of maximum/minimum operating temperature.

D. LEAKAGE: The use of fluid seals that require fluid weepage for lubrication are prohibited. Under non-operating conditions, static seals shall not leak externally. When subjected to proof pressure for three (3) minutes, the unit shall show no visible evidence of external leakage.

E. STROKE: The unit shall be capable of meeting the performance requirements of 3.3 A and C, when cycled about any point within the full stroke of the unit. The full stroke of the end bent units is +/- 9" and the full stroke of the arch pier units is +/- 12".

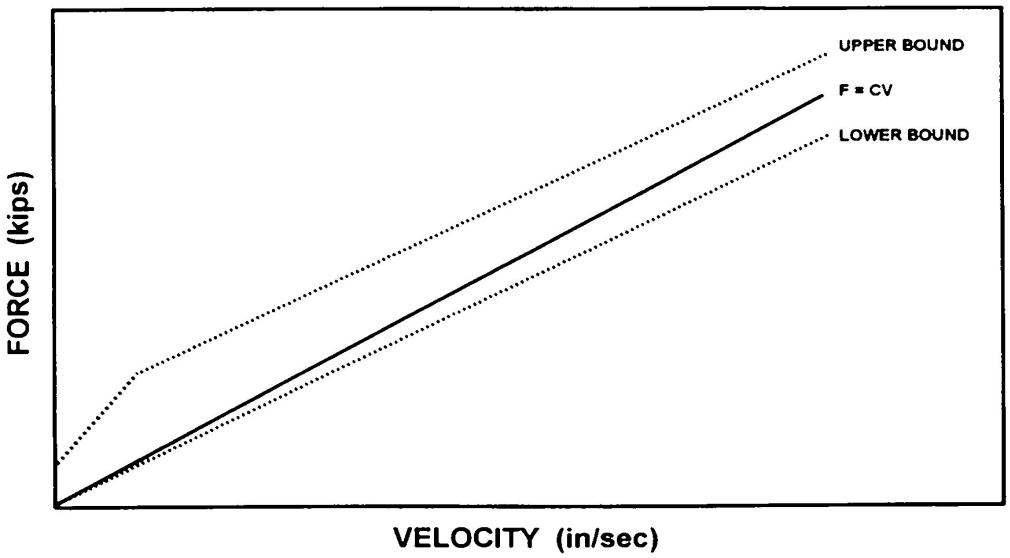

FIGURE 1 – FORCE-VELOCITY DAMPER OUTPUT ENVELOPE

3.4 LIFE

A. LIFE: The unit shall be designed to guarantee a minimum reuse of one maximum capable seismic event before requiring refurbishment.

3.5 ENVIRONMENTAL CONDITIONS

A. AMBIENT OPERATING TEMPERATURE: When installed, the unit shall be capable of operating in an ambient air temperature from 0°F to +120°F.

B. ATMOSPHERIC PRESSURE: The unit shall operate at essentially sea level pressure (760 ±50mm mercury).

C. HUMIDITY: The unit shall be designed to withstand relative humidity up to 100 percent, including condensation due to temperature change.

D. OTHER ATMOSPHERIC ELEMENTS: The unit shall be designed to withstand any of the probable combinations of the following atmospheric elements: rain, snow, sleet, hail, ice, fog, smoke, wind, ozone, sunshine, sand and dust, and salt atmosphere.

3.6 DELIVERY, HANDLING, AND STORAGE

A. DELIVERY: Deliver production VDD's to the job site in protective packaging for freight and handling purposes.

B. HANDLING: Handle VDD's and components carefully to prevent damage, breaking, denting or scoring. Do not deliver damaged VDD's or components; replace with new.

C. STORAGE: Store VDD's in a clean place. Protect from dirt, fumes, construction debris and physical damage.

4.0 TESTING, MATERIALS, AND EQUIPMENT

4.1 TESTING OF VISCOUS DAMPING DEVICE UNITS

A. PRODUCTION UNIT TESTING:

1. Purpose: Production unit testing shall be conducted in order to verify the following:
   a. The general quality and manufacturing consistency of each of the production units.
   b. The general consistency of all production units in terms of their performance characteristics to meet the requirements of the contract documents.

2. Acceptance Criteria:
   a. No visible leakage or signs of physical deterioration or degradation in performance shall be observed during and after the series of tests. There shall be no signs of yielding or permanent deformation, or re-torquing of parts.
   b. The force-velocity results from the tests both in tension and in compression, adjusted for expected variations due to temperature and number of stroke cycles shall fall entirely within the upper and lower bound curves (Figure 1) as used for the final design of the damped structure.

3. Sequence of Testing:
   a. Quality Assurance Tests: Production units shall be subjected to and pass the following sequence of quality assurance tests:
      (1) Proof load test: An internal pressure shall be applied to each VDD that shall be equivalent to 150% of the maximum damper load (each production unit). This pressure shall be maintained for 180 seconds.
      (2) High Level Proof Load Test: One out of every fifty production units, or a minimum of two (2) units, shall have an internal pressure of 20,000 psi applied. This pressure shall be maintained for 180 seconds.
      (3) Life Cycle Test: One out of every fifty production units, or a minimum of two (2) units, shall be cycled through its full end to end displacement for a total of 60

cycles. The cyclic velocity is expected to be much slower than the design maximum velocity and shall depend on the capacity of the approved testing apparatus.

b. Performance Verification Tests:

(1) Production unit testing shall be conducted on all units in order to verify the performance consistency of each production unit. These tests shall be performed in the tension and compression directions and shall verify the force velocity characteristics of the damper. Tests are to be performed at 100% of DBE velocity as determined from dynamic analysis of the structure for 3 cycles. The test results shall fall entirely within the upper and lower bound curves (+/- 15%). The force, displacement and time measurements shall be accurately obtained and recorded. Force-velocity plots shall be constructed from this data.

(2) For time/cost savings, testing in the compression direction only may be proposed, provided the damper manufacturer can substantiate the balanced nature of fluid orificing in each direction. The use of valves and/or reservoirs or accumulators are not considered a balanced method and will require testing in both directions.

4.2 STANDARDS: Conform to the applicable provisions of the current editions of the following standards, except as indicated otherwise on the drawings or the specifications:

1. Title 24, Part 2, CCR, 1989 Amendments
2. ASTM E4 - Load Verification of Testing Machines
3. ASTM A36 - Specification for Structural Steel
4. ASTM A325 - Specification for High Strength Steel Bolts
5. ASTM A570 - Specification for Structural Sheet Steel
6. AWS D1.1 - Structural Welding Code of the American Welding Society
7. AMS-W-6858 - Welding, Resistance: Spot and Seam
8. AWS- C3.4, C3.5, C3.6 - Brazing of Steels, Copper, Copper Alloys, Nickel Alloys, Aluminum and Aluminum Alloys
9. AWS- C1.4, C1.4M - Welding, Spot, Hardenable
10. NAV SEA S9074-AQ-GIB-010/248 – Welding and Brazing Procedure and Performance Qualifications
11. AMS-STD-2175 - Classification and Inspection of Casting
12. ANSI/ISO/ASQ 9001 (ISO 9001) - Quality Management Systems-Requirements
13. SAE AS/EN 9100 Quality Management System
14. ISO 14001 – Environmental Management Systems
15. AISC “Specifications for the Design, Fabrication and Erection of Structural Steel for Buildings”, by the American Institute of Steel Construction

16. AISC “Code of Standard Practice for Steel Buildings and Bridges”
17. SSPC “Steel Structures Painting Council”
18. MIL-HDBK-5 “Specifications for Metallic Materials"

NOTE: Proposed alternate standards shall be submitted to the architect/engineer for review and approval.

4.3 VDD MATERIALS AND PARTS

A. Except as specified herein, the materials, parts and processes used in the design and manufacture of the unit shall conform to specifications and standards selected in the order of precedence established by MIL-STD-970. All materials and processes used shall be identified in vendor drawings by specifications or standards.

B. MATERIALS: All materials used in the manufacture of the unit shall be subject to approval by the engineer of record.

1. Materials: Materials shall have allowable stress values taken from MIL-HDBK-5. Unless suitably protected against electrolytic corrosion, dissimilar materials as defined in MIL-STD-889 shall not be used in contact with each other. Dissimilar metal joints shall not be permitted without a non-metallic separator or gasket of at least .06 inch thickness. The use of aluminum, aluminum alloys, magnesium, magnesium alloys, beryllium and beryllium alloys is prohibited. The use of non-stainless steel internally exposed to internal pockets of air or gas (as could occur in an internal reservoir, and plumbing to the reservoir) is prohibited.
2. Fungus Resistant Materials: Only non-nutrient materials shall be used in the unit.
3. Castings: All castings shall be prohibited for pressure vessel parts or any other parts subjected to tensile or bending stresses, except for parts such as covers, handles, etc. whose failure would not affect the structural integrity or performance characteristics of the unit. Such casting may be Class 2B, subject to the approval of the engineer of record.

C. PARTS

1. VDD’s shall be constructed of maintenance-free designs only. Reservoirs, external plumbing and/or fluid level indicators such as sight windows or pressure indicators that may leak are strictly prohibited.
2. Age Sensitive Parts: All non-metallic packing, seals, wipers or gaskets shall be of non-age sensitive materials.
3. Piston rods and any part that slides relative to a seal shall be manufactured from stainless steel only. Plating may be applied over the stainless steel if required by the type of fluid seal selected.

4. Operating fluid used in the dampers shall be non-toxic, non-flammable, and cosmetically inert silicone per U.S. Federal Standard VV-D-1078. Petro-chemical fluids shall not be used.

5. The components of the damper that are pressure vessels are to be of non-tie rod type construction, without externally supported heads or end caps. Welded construction or castings of any type are not permitted for pressure vessel construction.

6. Pressure vessels and seals shall be rated for 20,000 psi minimum burst pressure. A randomly selected production unit shall be tested to this pressure, with no loss of fluid or parts failure of any type permitted.

7. Parts List Approval: The vendor shall submit the equipment parts list for review and approval by the engineer of record. Approval will be based on an evaluation of the following documentation as applicable to each part.

a. Vendor part number and nomenclature
b. Military or other applicable specifications
c. Source name and part number
d. Testing and inspection requirements

5.0 FABRICATION AND QUALITY CONTROL

5.1 FABRICATION

A. PROCESSES

1. Protective Treatment: Materials subject to deterioration when exposed to environmental conditions likely to occur during service usage, shall be protected against such deterioration in a manner that will in no way prevent compliance with the requirements of this specification. The use of any protective coating that will crack, chip or scale with age or extremes of climate and environmental conditions shall not be used. Corrosion control shall be used as a guide for minimizing corrosion damage to the assembly.

2. Fusion Welding: Fusion welding shall be in accordance with approved standards. Weld design shall be based on the function and strength of the assemblies. Fillet welds on plate above 0.125 inches thickness will not be used on primary structure without specific approval by the engineer of record. Weld quality shall be specified on vendor drawings with proper acceptance standards and inspection methods.

3. Resistance Welding: Resistance welding shall be in accordance with MIL-W-6858 and MIL-W-45223, as applicable.

4. Welder Certification: Certification tests for welders shall be in accordance with AWS D1.1.

5. Brazing: The brazing of steels, copper, copper alloys and nickel alloys shall conform to MIL-B-7883.

6. Soldering: Soldering shall be in accordance with approved standards. Whenever insulation material is subject to heating during soldering, the material shall be undamaged and parts fastened thereto shall not be loosened. No mechanical assembly shall depend on soft-solder for mechanical strength.

7. Finish: The exterior finish of the unit, including the color and finish type required shall be recommended by the vendor and submitted to the engineer of record for approval.

B. WORKMANSHIP: All parts shall be free of burrs and sharp edges and any damage, defect or foreign material which might detract from the intended operation, function or appearance of the unit.

5.2 SAFETY

A. SAFETY: The design of the unit shall be such that all possible sources of danger to personnel or equipment during assembly, disassembly, testing, operation and maintenance are minimized. Where required, precautionary measures shall be prominently and clearly indicated on the equipment

5.3 MAINTAINABILITY

A. MAINTAINABILITY: The unit shall be constructed to be maintenance free. The use of reservoirs, external plumbing and/or fluid level indicators shall not be permitted. Each VDD shall be designed and constructed such that installation, removal and replacement, if necessary, shall be a simple process not requiring any special tools or methods. The use of fluid seals that require fluid weepage for lubrication are prohibited.

5.4 INTERCHANGEABILITY

A. INTERCHANGEABILITY: All parts having the same manufacturer's part number shall be functionally and physically interchangeable. The vendor shall assign new part numbers when change numbers cause any of the following conditions:

1. Performance or durability is affected to such an extent that superseded items must be discarded for reasons of safety or malfunctioning.
2. Parts, subassemblies of complete units are changed to such an extent that the superseded and superseding items are not interchangeable.
3. Superseded parts are limited to use in specific articles or models of articles and the superseding parts are not so limited to use.

When interchangeable repairable assemblies contain a non-interchangeable part, the part number re-identification of the non-interchangeable part, of the next assembly and all the progressive higher assemblies shall be changed up to and including the assembly where the interchangeability is re-established.

5.5 CHANGE CONTROL

A. CHANGE CONTROL: After initial design completion and approval or initial hardware delivery, whichever occurs first, any change or substitution of material, dimensions, processes or other characteristics must be approved by the engineer of record prior to incorporation. The vendor shall exercise the same configuration control over his suppliers.

5.6 IDENTIFICATION MARKING

A. IDENTIFICATION MARKING: Units, subassemblies and parts shall be marked for identification in accordance with MIL-STD-130.

5.7 SERIAL NUMBER ASSIGNMENT

A. SERIAL NUMBER ASSIGNMENT: Sequential serial numbers shall be assigned to all units in accordance with architect/engineer of record's requirements. The individual number shall be assigned according to the vendors standard practice unless otherwise specified in the purchase order or contract.

5.8 QUALITY CONTROL PROVISIONS

A. PRODUCT QUALITY CONTROL: To ensure effective control over product quality, the vendor shall, establish and maintain a manufacturing/processing control system including written process specifications and procedures to insure that manufacturing, processing, inspection and testing are accomplished in accordance with the following:

1. Quality Management System Requirements ISO 9001 and AS/EN 9100.

The seller shall provide and maintain a system that complies with U.S. requirements of the current revision of ISO 9001and AS/EN 9100 for quality assurance in design, manufacture, test, and repair of dampers. Certification to ISO 9001 or AS/EN 9100 by an individual or firm located outside the United States of America is prohibited.

The seller's manufacturing facility shall be in compliance with the requirements of the current revision of ISO 14001 Environmental Management Systems.

B. MANUFACTURING PROCESS CONTROL: In addition to compliance with both of the quality assurance systems listed above, the vendor must maintain a system for manufacturing process control of this project which includes as a minimum the following:

1. Raw Material Traceability.

2. Specific Raw Material Traceability.
3. Special Process Certification Traceability.
4. Detailed manufacturing instructions that identify by operation and machine the work performed.
5. Inspection instructions.
6. In process and final detail component inspection instruction with actual dimensions.

C. PART INFORMATION: Specific instructions for detail part marking providing for one way backward traceability to the information listed in paragraph 5.8.B (above) shall be provided by the contractor. This information shall be readily retrievable and shall be combined into one inclusive document that is controlled and approved by quality assurance personnel at the contractor's facility.

D. CALIBRATION SYSTEM REQUIREMENTS: All devices used to measure, gage, test, inspect or otherwise examine items to determine compliance with specification and/or contractual requirements shall be calibrated in compliance with the applicable section of the current revision of both ISO 9001 and AS/EN 9100 standards, to a calibrated measurement standard which has known valid relationships traceable to the U.S. National Institute of Standards and Technology (NIST).

6.0 MEASUREMENT

The final quantity of Viscous Dampers will be the actual number of individual dampers, including mounting pins and brackets, acceptably furnished and installed during the project. The Department will not measure dampers replaced due to damage or rejection.

7.0 PAYMENT

The Department will pay for the Viscous Dampers at the contract unit price bid for each type. The Department will not pay for dampers replaced due to damage or rejection. Payment is full compensation for furnishing all materials and equipment necessary to install, operate, move, repair, and maintain or replace the dampers. All prescribed work shall be done in a workmanlike and acceptable manner including all labor and incidentals necessary for completion. The Department will make payment for the completed and accepted quantities under the following:

Item Code	**Pay Item**	**Pay Unit**
24611EC	Seismic Dampers	Each

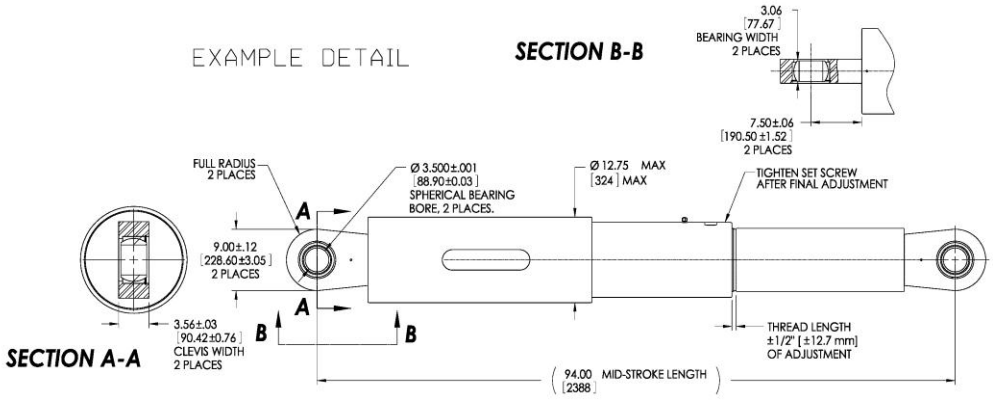
EXAMPLE DETAIL
SECTION B-B
3.06
[77.67]
BEARING WIDTH
2 PLACES
7.50±.06
[190.50±1.52]
2 PLACES
FULL RADIUS
2 PLACES
Ø 3.500±.001
[88.90±0.03]
SPHERICAL BEARING
BORE, 2 PLACES.
Ø 12.75 MAX
[324] MAX
TIGHTEN SET SCREW
AFTER FINAL ADJUSTMENT
A
A
9.00±.12
[228.60±3.05]
2 PLACES
B
B
3.56±.03
[90.42±0.76]
CLEVIS WIDTH
2 PLACES
SECTION A-A
THREAD LENGTH
±1/2" [±12.7 mm]
OF ADJUSTMENT
94.00 MID-STROKE LENGTH
[2388]

SPECIAL NOTE FOR FINGER EXPANSION JOINT

1.0 DESCRIPTION. This work includes the fabrication, furnishing and installation of a tooth expansion joint with a fabric reinforced drainage trough for highway bridge joints. Materials and workmanship shall be in accordance with the KYTC Standard Specifications; AASHTO/AWS D1.5M/D1.5 "Bridge Welding Code"; AWS D1.1/D1.1M "Structural Welding Code – Steel"; AASHTO "LRFD Bridge Design Specifications", 6th Edition (AASHTO LRFD Design); AASHTO "LRFD Bridge Construction Specifications," 3rd Edition, 2010 (AASHTO LRFD Construction); the Contract Documents; and this Special Provision.

2.0 MATERIALS. Materials shall conform to the following:

A. Structural Steel. Steel plate, bars and shapes shall conform to AASHTO M270 (ASTM A709), Grade 50. (Sidewalk and (railing) cover-plates shall conform to AASHTO M270, Grade 50, or ASTM A36). No aluminum components or hardware shall be used. Galvanize steel components in accordance with ASTM A123.

B. Welded Studs. Welded studs for anchorage purposes shall conform to ASTM A108.

C. Anchors Bolts. Anchor bolts, nuts and washers shall be in accordance with ASTM A307 Grade C, ASTM A563 Grade DH and ASTM F436, respectively, and shall be hot-dipped galvanized.

D. Neoprene Trough. Fabric reinforced drainage trough shall be polychloroprene (Neoprene) of the thickness specified in the plans. Trough shall be reinforced with one or two plies of tightly woven polyester or nylon fabric and shall be supplied and installed in one continuous length. The inside surface of the trough shall be smooth to promote self-removal of foreign material during normal joint operation. The shape of the trough shall be designed to minimize stress concentrations at compression strips.

Neoprene/fabric composite material shall comply with the following:

PHYSICAL PROPERTY	ASTM TEST	VALUE
Density		75 psf minimum
Hardness (Type A Durometer)	D2240	50 to 75 points
Tensile Strength, both directions	D378	800 lbs/in. minimum
Elongation @ ultimate tensile strength	D412	35% maximum

PHYSICAL PROPERTY	ASTM TEST	VALUE
Tear (Die C)	ASTM S624	120 lbs/in. minimum
Low Temperature Brittleness (22 hrs. @ -20^{0}F, then wrapped around a 3 inch mandrel)	ASTM D2137	No cracks
Ozone Resistance (20% Strain) 100 pphm in air (100 hrs. @ 100^{0}F)	D1149	No cracks

E. Drainage Trough Hardware. Plates, fasteners, washers and nuts shall be stainless steel conforming to ASTM A240, ASTM F593 and ASTM F594.

3.0 DESIGN. Supplemental to the shop drawings, design calculations prepared in accordance with AASHTO LRFD Design, by an Engineer registered in the state of Kentucky shall be provided which indicate that the joint devices furnished by the manufacturer are adequate for the requirements of the Contract. Included in the calculations shall be: (a) rotation and horizontal movement capacity; (b) live load and impact factor utilized; (c) limit state load combinations used; (d) member design; (e) connection design.

4.0 FABRICATION. Tooth plate assembly may be fabricated in two pieces with a joint at the roadway crown (Option 1.) Alternatively, plate assembly may be fabricated in segments with individual lengths not less than 11'-0" (segmented joint) provided that segment joints occur at the crown line and within 1'-0" of roadway lane lines (Option 2.) Tooth plates for each assembly shall be cut from a single plate by burning in such a way that, after the plate is cut and the toothed plates placed in the same relative position as before burning, no part of the cut shall be wider than 5/16 in. Anchor holes, vent holes and tapers shall be machined into the plate. Upon completion, the machined plate shall be galvanized per ASTM A123.

The joint segments shall be manufactured and delivered in pairs of independent elements with parallel gaps between teeth. Both halves (abutment and superstructure, or each side of adjacent units) of finger expansion joints shall be fully assembled in the shop to ensure that full joint closure can be attained without binding of fingers. After joint segments have been fully assembled to nominal joint dimensions and approved, they shall be match marked and scored (the upper surface of the finger plates shall be permanently scored to provide two or more parallel lines in both directions) to aid in proper field installation.

5.0 SAMPLING, TESTING & INSPECTION. An independent laboratory, to ensure compliance with these provisions, shall test each lot of composite neoprene/fabric sheeting. Two certified copies of the qualification test data indicating that the tested materials comply with these provisions shall be submitted to the Engineer and KYTC. The sample from each lot shall be one 6-inch piece, 2-foot long.

Shop Inspection. The Engineer reserves the right to visit the manufacturer's fabrication shop for purposes of inspecting the manufacturing, assembly, testing and painting of the bearings.

6.0 IDENTIFICATION, SHIPPING & HANDLING. Both halves (abutment and superstructure) of finger expansion joints shall be fully assembled in the shop to ensure that full joint closure can be attained without binding of fingers. After joint segments have been fully assembled to nominal joint dimensions and approved, they shall be match marked and scored (the upper surface of the finger plates shall be permanently scored to provide two or more parallel lines in both directions) to aid in proper field installation.

Expansion joint openings shall be preset prior to shipment and assembled with temporary shipping angles at maximum 5'-0" centers. Fabricator shall show details of all shipping and erection temporary attachments on the shop drawings.

7.0 INSTALLATION. Installation of the expansion dam shall be to the lines and grades shown on the plans and in accordance with Contract Documents and shop drawings. Expansion joint system shall be shipped to job site preassembled for units either side of crown line (Option 1) or for the fabricated segment lengths (Option 2).

Align the finger plate or sliding plate joint assemblies in position and check the expansion opening. The expansion opening must be adjusted for temperature prior to bolting, welding or placing concrete on each side of the joint.

Test fit the finger plates or sliding plates with all the armoring and anchorages in place. Install the finger joint centered over the expansion gap, for both fingerplates and sliding plates. Verify that the joint is in plane and sloped per the roadway. For Fabrication Option 2 align adjacent finger plate assemblies using temporary angles bolted to the assemblies. Make sure the fingers do not rub during the full range of temperature movement.

The Engineer will confirm the procedure, opening and alignment prior to concrete placement. After confirmation, remove the finger plates or sliding plates before concreting. Cast and cure the expansion joint blockout per KYTC specifications. Place concrete under the expansion dams, vibrate until the concrete is forced through air holes, and strike off excess concrete. After the concrete has cured, clean air holes and fill with an approved sealer.

Install the fabric trough and the finger or sliding plates according to the Contract Documents and shop drawings. Do not splice the drain trough, unless indicated. If splices are indicated, use splices vulcanized by the manufacturer. Do not use longitudinal splices.

8.0 SUBMITTALS. Submit shop drawings, for each location, type and model of expansion device used. Shop drawings shall include, but not be limited to, the following:

A. Complete details of all components and sections showing all materials used in the expansion joints.
B. A listing of all applicable KYTC, ASTM and AASHTO specifications.
C. Name and address of the manufacturer, and location of the fabrication plant.
D. Name and telephone number of the manufacturer's representative who will be responsible for coordination of production, inspection, sampling and testing.
E. Welding procedures used in the expansion joint assembly manufacture clearly described and detailed.
F. Table of longitudinal offsets for installation at varying temperatures. Use 60°F as the mean temperature.

Joint shop drawings and neoprene trough shop drawings shall be coordinated to ensure that joints and troughs will fit when field assembled. Fabrication shall not commence until the approved shop drawings are in the hands of the Inspector and fabricator and the Engineer has authorized fabrication.

9.0 MEASUREMENT. Quantity for Finger Expansion Joint will be measured per linear foot inside face to inside face of barriers. The unit price for Finger Expansion Joint will be full compensation for furnishing, fabricating, installing structural steel tooth plates, roadway joint seals, drainage troughs, catch basins, downspouts, sidewalk plate, barrier cover plates and all material, labor, equipment, tools and incidentals necessary to complete the work as specified in the Contract Documents.

10.0 PAYMENT.

Code	Pay Item	Pay Unit
23859EC	FINGER EXPANSION JOINT	LF

SPECIAL NOTE FOR MODULAR EXPANSION JOINT

1.0 DESCRIPTION. This work includes the fabrication, furnishing and installation of a watertight modular bridge joint system (MBJS.) The joint system consists of multiple preformed neoprene strip seals mechanically held in place by steel edge and separation center beams. The center beams are supported by support bars suspended over the joint opening on sliding elastomeric bearings. An equidistant control system maintains equal spacing between all center beams and edge beams.

1.1 General. Design, materials and workmanship shall be in accordance with: KYTC Standard Specifications; AASHTO/AWS D1.5M/D1.5 "Bridge Welding Code"; AWS D1.1/D1.1M "Structural Welding Code – Steel"; AASHTO "LRFD Bridge Design Specifications", 6th Edition (AASHTO *LRFD Design*); AASHTO "LRFD Bridge Construction Specifications," 3rd Edition, 2010 (AASHTO *LRFD Construction*); the Contract Documents; and this Special Note.

Multiple support bar, single-support bar or swivel joint MBJS systems that meet the provisions of this Special Note may be acceptable for use.

1.2 Acceptable Systems. Only manufacturers who have successfully completed fatigue and performance testing in accordance with Subsection 1.3 will be permitted to supply the MBJS. Submit final results of all required tests to the Engineer for approval prior to manufacture.

1.3 Pre-Qualification Testing Requirements. Before a MBJS can be accepted for installation on this project, the design must be pre-qualified by the manufacturer through successful fatigue and performance testing administered by an independent testing laboratory. Perform fatigue and performance testing in accordance with Section 19, Appendix A19 of AASHTO *LRFD Construction*.

All testing shall be performed on specimens similar to the MBJS system and components to be used for this project and meeting the requirements of the Contract Plans. Successful testing will prequalify such a system —with variations as permitted by the Engineer —for the project, and no further testing will be required.

No claims for delay will be considered for testing or failure to submit required testing documentation in a timely manner.

2.0 MATERIALS. Materials shall conform to the following and shall be identical to those used to meet the Pre-Qualification Testing Requirements of Subsection 1.3:

A. Structural Steel. Structural steel for center beams, edge beams, and support bars, shall meet the physical requirements (tensile strength, yield strength, elongation, and Zone 2 Charpy impact requirements) of ASTM A709, Grade 50. Support boxes, stirrups for attachment to center beams, and sidewalk and railing cover plates shall conform to ASTM A709, Grade 50.

All structural steel not defined herein shall meet the physical requirements shown on the working drawings. The specific steel grade shall meet or exceed the physical requirements listed on the working drawings and/or used in the design calculations. Aluminum components shall not be used.

Welding shall conform to ANSI/AWS D1.1/D1.1M "Structural Welding Code-Steel" and AASHTO/ AWS D1.5M/D1.5 "Bridge Welding Code".

B. Anchors Bolts. Anchor bolts, nuts and washers shall be in accordance with ASTM A307 Grade C, ASTM A563 Grade DH, and ASTM F436, respectively, and shall be hot-dipped galvanized.

C. Studs. Welded studs for anchorage purposes shall conform to ASTM A108.

D. Stainless Steel. Stainless steel sheets conforming to ASTM A240/A240M, Type 304, shall be provided on sliding surfaces. The surface shall be polished to a Number 8 mirror finish.

E. Polytetrafluorethylene (PTFE). PTFE shall be 100-percent virgin material, woven fabric or dimpled sheet conforming to the requirements of Section 18.8 of AASHTO LRFD Construction and shall be provided on every sliding surface.

F. Elastomeric Seal. Preformed elastomeric joint seals shall be of the single diaphragm strip type with a minimum thickness of 7/32" and shall conform to ASTM D5973. The elastomeric seal shall be supplied and installed in one continuous length, and no field splicing shall be allowed. Sealing gland shall meet the movement requirements shown in the Contract Plans and the material requirements as follows:

PROPERTY	ASTM TEST METHOD	VALUE
Hardness, Durometer A	D 2240 (Modified)	50-65 Durometer, Shore A
Tensile Strength, min	D 412	2000 psi
Elongation at break, min	D 412	250%
Compression Set at 72 hours, max	D 395, Method B	40% at 212°F

G. Lubricant-Adhesive. Elastomeric seal shall be installed utilizing a one-part moisture curing polyurethane and aromatic hydrocarbon solvent mixture that complies with ASTM D4070.

H. Springs and Bearings. Springs, bearings, and equidistant devices (sometimes referred to as control springs) shall be of elastomeric or urethane material and shall be of the same material composition and formulation, manufacturer, fabrication procedure and configuration as the ones used in the prequalification test. Urethane foam shall conform to ASTM D3574.

I. Reinforcing Steel. All reinforcing steel in the blockout shall be stainless steel meeting the requirements of "Special Note for Steel Reinforcement - Stainless."

3.0 DESIGN. The modular bridge joint system shall be designed in accordance with Article 14.5, "Bridge Joints," of AASHTO *LRFD Design*. Limit states, loads, load factors and distribution factors shall comply with Article of 14.5.6.9 of that specification. The MBJS shall meet these additional requirements:

A. Center Beams and Edge Beams.

- each separation beam (center beam) shall be attached, either directly or indirectly, to an independent support beam using a complete joint penetration groove weld; partial penetration welds, fillet welds, bolted connections, or other means to directly or indirectly attach separation beams to support bars, is prohibited
- edge beams shall consist of a monolithic steel shape with a machined or extruded seal retainer cavity; the web of the edge beam cross-section shall be at least ½ in. in thickness
- center beams shall consist of a monolithic steel shape with a machined or extruded seal retainer cavity; the weight of the center beam shall be at least 25 lbs. per foot and the web shall be at least 1¼ in. in thickness
- where field splices are required due to shipping restrictions or stage construction, splices shall be located under the median barrier or away from design wheel paths
- only field-splice details that have been fatigue-tested in accordance with the prequalification tests in Section 1.3 of this Special Note may be used for the center beams and edge beams
- center beam spans with a splice shall not be greater than 4.00 ft.

B. **Support Bars and Boxes**.

- the maximum allowable spacing between support bars shall be 6.00 feet
- steel plate or tubing for support boxes with a width not greater than 16 in. shall have a minimum thickness of 3/8 in. For support box widths greater than 16 in., the top plate width-to-thickness ratio shall not exceed 45 unless stiffening ribs are used.
- a 2.0 in. minimum gap shall be provided between the bottom surfaces of the MBJS and the deck or abutment blockouts to allow adequate placement and consolidation of concrete under and around all parts of the MBJS, including support boxes.

C. Seals.

- the number of seal gaps (cells) shall be such that the maximum opening per cell (clear distance between center beams or center beam and edge beam) shall not exceed 3.15 in. (3 in. nominal)

- the sealing elements shall not extrude above the top of the modular joint seal assembly

D. Support Box Bearings and Springs.

- an equidistant control system, which distributes the total joint opening evenly between cells, shall be incorporated
- support bar bearings and springs shall be positively locked into support boxes with non-metallic dowels or pins; the connection must permit removal and replacement of the bearing and spring components.

E. **Performance and Maintenance**.

- the joint seal assembly shall be watertight
- the modular joint seal assembly shall be designed with adequate access to all internal components in order to assure the feasibility of inspection and maintenance activities
- the design concept shall accommodate scheduled maintenance and periodic replacement of seals, support bearings and control springs to provide a long-term cost-effective lifetime for the joint seal assembly

Supplemental to the shop drawings, design calculations prepared in accordance with AASHTO *LRFD Design* by an Engineer registered in the Commonwealth of Kentucky shall be provided. Included in the calculations shall be: (a) rotation and longitudinal and transverse horizontal movement capacity; (b) live load, fatigue limits and impact factors utilized; (c) limit state load combinations used; (d) member design; (e) connections design; (f) splice design. The calculations shall include a statement indicating that the joint devices furnished by the manufacturer are adequate for the requirements of the Contract Documents.

4.0 FABRICATION. Expansion joints shall be fabricated and assembled at facilities owned and operated by the manufacturer, the manufacturer being the single entity that designs, fabricates and installs (or supervises the installation of) the joint assemblies.

All structural steel surfaces, except those made of stainless steel, shall be hot-dipped galvanized after assembly, in accordance with ASTM A123. Anchorages and support boxes shall be attached to the edge beam section prior to galvanizing. An anchorage shall be located within 9 in. of each end of each pre-galvanized section.

Stainless steel sheet shall be welded at each edge to the steel substrate by the tungsten-arc welding process in accordance with the current AWS specification. Stainless steel sheet shall be clamped to ensure full contact with the substrate during welding. Welds shall not protrude beyond the sliding surface of the stainless steel. Intermittent fillet welds are not allowed.

Each MBJS shall be assembled and elastomeric seals installed at the fabrication shop. Lubricant adhesive is to be used on all elastomer-to-steel contact areas for seal installation. Continuous glands shall be used for the full length of each MBJS.

When a splice is required for shipping or staged construction, each MBJS is to be shipped in separate sections sized in accordance with Section 3 of this Special Note or with the slab construction joints required for the construction stages as shown in the plans. If field splices will be used, the ends of the edge and center beams shall be staggered by 24 in. so that they are not at

the same point on each beam. Installation of seal elements is not required during fabrication for a MBJS with a splice (since seals must be continuous without splices for the full length of the device.)

5.0 SAMPLING, TESTING & INSPECTION. The MBJS to be used shall be prequalified in accordance with Section 1 of this Special Note.

5.1 Shop Inspection. The full-penetration weld that connects the center beam to the support bar shall be ultrasonically inspected in accordance with AWS D1.1. Twenty-five percent of the center beam-to-support bar welds shall be inspected in this manner, or as directed otherwise by the Engineer. If ultrasonic inspection reveals at least one rejectable weld defect, the fabricator shall then ultrasonically inspect another 25% of the center beam-to-support bar welds (25% of the original total of welds.) If rejectable defects are found in the second 25% set of welds (50% of total), all remaining non-inspected welds shall then be inspected. Each weld that is rejected by ultrasonic inspection shall be repaired using a welding procedure approved by the Engineer. The repaired welds shall be re-inspected ultrasonically in accordance with the original requirements.

The Engineer reserves the right to visit the manufacturer's fabrication shop for purposes of inspecting the manufacturing, assembly or testing of the MBJS.

5.2 Pre-installation Inspection. Immediately prior to installation, the MBJS and the blockout shall be inspected by the Engineer for:

- Proper alignment.
- Complete bond between the seals and the steel.
- Proper placement and effectiveness of studs or other anchorage devices.
- Proper placement of elastomeric springs and bearings.
- Appropriate clearance between the bottoms of the support boxes of MBJS and the surface of the blockout specified on the Contract Plans

5.3 Post-Installation Inspection. The MBJS shall be inspected after installation and again prior to opening the bridge to traffic to verify the following:

- The top surfaces of the MBJS are recessed from the finished roadway profile 0 to 0.25 in.
- There is no more than 0.125-in. difference in elevation among the tops of any of the center beams or edge beams. This variation shall be measured vertically from a straight line connecting the top of the deck profile on each side of the MBJS.
- There is no more than 0.5-in. difference among gap widths along the length of a seal or among the multiple cells of the MBJS.

After installation and prior to final acceptance, deck joint seals shall be tested in the presence of the Engineer for leakage of water through the joint. Any leakage of the joint seal shall be cause for rejection.

6.0 IDENTIFICATION, SHIPPING & HANDLING. The MBJS shall be delivered to the job site and stored as a single unit with seals installed, or as permitted in Section 4 of this Special Note if a splice is required, and in accordance with the Manufacturer's written recommendations as approved by the Engineer. Damage to the corrosion protection system shall be repaired to the satisfaction of the Engineer. Seals shall not be damaged or cut.

All joint materials and assemblies stored at the job site shall be protected from damage, and assemblies shall be supported so as to maintain their true shape and alignment.

7.0 INSTALLATION. To facilitate proper installation of MBJS in the field the contractor shall have available the services of a qualified installation technician who is employed full-time by the manufacturer of the expansion joint system being used.

Prior to installation of the joint, the blockout and supporting system shall be protected from damage and construction traffic.

7.1 Supporting MBJS During Concrete Placement. The MBJS shall be fully supported during the placement of the concrete. Welds for temporary attachments to the center beams or support bars for erection purposes shall be removed and the surface ground smooth. Damage to the corrosion protection system shall be repaired to the satisfaction of the Engineer using a method approved by the Engineer.

Devices used to maintain the preset openings in the MBJS shall be uniformly spaced at not greater than 15 ft along its length. A minimum of three such devices shall be used per fabricated segment.

To reduce corrosion of the MBJS, it shall be electrically isolated from the bridge deck and blockout reinforcement using a 1 inch clear gap or nonconductive sleeve material.

7.2 Placing the Concrete. Concrete shall not be deposited in the forms until the Engineer has performed the Pre-Installation Inspection described in Section 5 of this Special Note and approved the placement of the joint assembly, anchorages and reinforcement.

If there is a vertical grade, concrete shall be placed on the downhill side of the blockout first. The concrete shall be vibrated thoroughly so as to adequately consolidate concrete underneath the support boxes and edgebeams. Care should be taken to avoid displacement of the forms and reinforcing steel.

Devices used to maintain the preset openings in the MBJS shall be removed within two hours after the concrete is placed.

7.3 Bridging the MBJS After Installation. Construction loads shall not be allowed on the MBJS for at least 72 hours after installation is completed. If it is necessary to cross the MBJS, the Contractor shall bridge over the joint system in a manner approved by the Engineer.

7.4 Acceptance. The Engineer shall perform a Post-Installation Inspection as described in Section 5 of this Special Note. An MBJS that fails inspection or testing shall be replaced or repaired to the satisfaction of the Engineer at the Contractor's expense.

Any proposed corrective procedure shall be submitted to the Engineer for approval before corrective work is begun.

8.0 SUBMITTALS. The Contractor shall submit details of the MBJS to be used together with installation and waterproofing plans to the Engineer for approval prior to fabrication of the MBJS.

The shop plans shall include, but not be limited to the following:

- plan and section views of the MBJS for each movement rating and roadway width, showing dimensions and tolerances.
- all center beam/support bar joints and all shop and field splices
- complete details of all components and sections showing all material incorporated into the MBJS
- all ASTM, AASHTO or other material designations
- welding procedure specifications
- corrosion protection system
- method of installation, including, but not limited to: sequence; installation gap setting for various temperatures; support during placement of the concrete; lifting locations and lifting mechanisms; and installation at curbs
- temperature adjustment devices and opening dimensions relative to installation temperature
- any required changes to the blockout reinforcement in order to accommodate the MBJS temporary bridging plan if construction traffic is anticipated following installation
- design calculations in accordance with Section 3 of this Special Note

The Contractor shall also submit the following test reports and certificates for review and approval:

- Manufacturer's certificate of compliance with the AISC Quality Certification Program, Simple Steel Bridges.
- Certification that welding inspection personnel are qualified and certified as welding inspectors under AWS QC1, Standard for Qualification and Certification of Welding Inspectors. Documentation that any personnel performing nondestructive evaluation (NDH) are certified by ASNT.
- Manufacturer's certificate of compliance for the PTFE sheeting or fabric.
- Certification that MBJS passed the Prequalification Tests required in Section 1.3.
- Certification that the bearings, springs, and equidistant devices are the same formulation,
manufacturer and configuration that were used in the Prequalification Tests required in Section 1.3. In each certification, the name and address of the Manufacturer of the springs, bearings and equidistant devices shall be provided.

The Contractor shall submit for the Engineer's approval a written maintenance and part replacement plan prepared by the joint manufacturer. This plan shall include a list of parts and instructions for maintenance inspection, acceptable wear tolerances, methods for determining wear, and procedures for replacing worn parts.

Fabrication shall not commence until the approved shop drawings are in the hands of the Inspector and fabricator and the Engineer has authorized fabrication.

9.0 MEASUREMENT. Quantity for Modular Expansion Joint will be measured per linear foot inside face to inside face of traffic barriers. The unit price will be full compensation for furnishing, fabricating and installing MBJS, including sidewalk plate and all barrier cover plates, and all material, labor, equipment, tools and incidentals necessary to complete the work as specified in the Contract Documents.

10.0 PAYMENT.

Code	Pay Item	Pay Unit
24610EC	MODULAR EXPANSION JOINT	LF

SPECIAL NOTE FOR STRUCTURE LIGHTNING PROTECTION

Marshall - Trigg Counties
US 68/KY80 Bridge over Kentucky Lake – Drawing No. 24686

1.0 DESCRIPTION AND SCOPE OF WORK

1.1 Perform all work in accordance with the Kentucky Transportation Cabinet, Department of Highway's 2008 Standard Specifications for Road and Bridge Construction and applicable Supplemental Specifications, the Standard Drawings, this Note, and the attached detail drawings. Section references are to the Standard Specifications.

1.2 This work shall include the design, furnishing and installation of a complete structure lightning protection system on the arch. For the Special Note, the 'arch' is defines as all structural steel components and framing in the Span 5 superstructure, including the Rib, Tie, Knuckle, Floor Beams, Stringers, and all connections, splices and bracing thereto the above components. At a minimum the following work is included:

1.2.1 Design of a Lightning Protection System meeting the requirements of the Specifications, Plans and this Special Note.
1.2.2 Preparation and submittal for approval of shop drawings for Structure Lightning Protection System.
1.2.3 Furnishing all labor, materials, tools, and equipment necessary for installation of Structure Lightning Protection System.
1.2.4 Any other work specified as part of this contract.

2.0 GENERAL

The Structure Lightning Protection for the arch bridge superstructure shall be in accordance with the latest edition of ANSI/NFPA 780-2011 lightning protection installation standards, ANSI/UL 96 lightning protection components and UL96A installation requirements for lightning protections systems. Protection shall include, but not be limited to air terminals, bonding, interconnecting conductors, and grounding as required under the provisions of UL 96A, NFPA 780, and as specified in excess of the referenced standards herein.

3.0 DESIGN

3.1 The contractor shall design and prepare calculations, and shop drawings for the Structure Lightning Protection System. All design documents shall be stamped by a Professional Engineer registered in the State of Kentucky. Design calculations and shop drawings shall be submitted to the engineer for review and

approval. The contractor shall receive engineer's approval prior to purchasing any materials or equipment for the Structure Lightning Protection System.

3.2 The Lightning Protection System shall be designed to continue to function after the design seismic event.

3.3 At a minimum, the structure shall be grounded at each of the main bearings at Piers 4 and 5. A separate grounding conductor shall be used for the connection at each main bearing point. The grounding conductors shall be run inside FRE Conduit down the face of the pier away from the shipping channel. Separate ground connections shall be made at the base of the piers for each grounding conductor.

3.4 No welding will be allowed on any arch members or plates designated as fracture critical. All other welding must be approved by the Engineer. Only welding as shown on the approved shop drawings will be allowed.

4.0 MATERIALS

4.1 All materials shall comply in weight, size and composition with the requirements of the Underwriters' Laboratories, Inc., the National Fire Protection Association Code and OSHA relating to the height of the structure.

4.2 All rods, cables, ground rods, and connectors used in the system shall carry an UL Label "A" & "B" and all lightning air terminals shall carry the Manufacturer's name.

4.2.1 Conductors: Conductors shall consist of commercially pure copper cable, sized in accordance with NFPA Code.

4.2.2 Conductor Fasteners: Conductor fasteners shall be an approved type of noncorrosive metal having ample strength to support conductor.

5.0 INSTALLATION

5.1 General

5.1.1 All ungrounded sizable metallic objects within 6' of the arch or metal connected to the arch, railings barrier rails etc. shall be bonded to the system with approved fittings and conductors.

5.1.2 Copper materials connecting to steel shall be lead-coated.

5.1.3 Connection between metals shall be made with approved exothermic welds.

5.1.4 All materials shall be fastened to eliminate any possibility of displacement and subsequent maintenance.

5.2 Air Terminals

5.2.1 Air terminals shall be approved type extending not less than 10 inches above the top chord of the arch and shall be securely anchored.

5.2.2 Air terminals shall not extend higher than 24 inches except with individual approval or as required by OSHA. Terminals 23 inches and less shall be spaced 20 feet apart.

5.2.3 Terminals 24 inches and higher shall be spaced 25 feet apart or as required by codes.

5.3 Conductors: Conductors shall be run concealed.

5.4 Conductor Fasteners: Space 3'-0" O.C. max.

5.5 Ground Connection

5.5.1 Drive to the required depth to reach permanent moisture but in no case less than 11'-6". In case of rock ledge or other conditions making compliance impossible, trench or other grounding will be permitted, providing it will pass UL requirements.

6.0 MEASUREMENT

Structure Lightning Protection. Measurement will be lump sum and include the design, shop drawing preparation, and installation of the Structure Lightning Protection.

7.0 PAYMENT

Structure Lightning Protection. Payment at the contract unit price is full compensation for all work required by this note including the design, prepare shop drawings, and to provide all materials, labor, equipment, tools, and incidentals necessary to complete the work as specified by this note.

Payment will be made under:

BID ITEM CODE		
23868EC	STRUCTURE LIGHTNING PROTECTION	LS

The Department will consider payment as full compensation for all work required by this note.

SPECIAL NOTE FOR DECORATIVE FENCE PANEL

1.0 DESCRIPTION. This work includes all labor, equipment and materials to fabricate and install decorative fence panels attached to the pedestrian railing spaced intermittently as quantified in the Contract Documents.

2.0 MATERIALS. Materials shall conform to the following:

A. Structural Steel. Steel plate shall conform to AASHTO M270 (ASTM A709), Grade 50. No aluminum components or hardware shall be used.

B. Anchors Bolts. Anchor bolts, nuts and washers for connection of panel/post base to concrete shall be in accordance with ASTM A325 Type 1, ASTM A563 Grade DH and ASTM F436, respectively, and shall be hot-dipped galvanized.

C. Hardware. Plates, fasteners, washers and nuts for connection of decorative panel assembly to pedestrian railing shall be stainless steel conforming to ASTM A240, ASTM F593 and ASTM F594.

3.0 DESIGN.

A. Plate. Decorative panels shall be ½" plate steel with plasma or water jet cutouts to create a silhouette.

B. Patterns. Patterns are provided in the exhibits attached to this Special Note. Computer aided design files with linework drawn to scale of the patterns will be provided upon request to the Contractor awarded this contract for use in fabrication. Compatibility of the files provided by the Engineer with fabrication computer controlled cutting machinery is not the responsibility of the Engineer.

C. Shape. Manufacturer of decorative panels should work with pedestrian rail Fabricator and Contractor to verify exact shape of panels. Panels are approximately rectangular but it is the Contractor's responsibility to ensure communication between all parties concerning the exact shape and corner angles of the panels. Fabricate the panels to match the geometry of the pedestrian railing at each panel location along the stations of the bridge.

4.0 FABRICATION. Materials and workmanship shall be in accordance with the KYTC Standard Specifications; AASHTO/AWS D1.5M/D1.5 "Bridge Welding Code"; AWS D1.1/D1.1M "Structural Welding Code – Steel"; AASHTO "LRFD Bridge Design Specifications", 6th Edition (AASHTO LRFD Design); AASHTO "LRFD Bridge Construction Specifications," 3rd Edition, 2010 (AASHTO LRFD Construction); the Contract Documents; and this Special Provision.

Upon completion, the machined plate shall be galvanized per ASTM A123.

5.0 SAMPLING, TESTING & INSPECTION. Submit one completed full-size panel with connection hardware as a sample panel to the Engineer for approval prior to fabricating additional panels. Upon approval of the Engineer, the panel may be used as a production panel.

Shop Inspection. The engineer reserves the right to visit the manufacturer's fabrication shop for purposes of inspecting the manufacturing, assembly, testing and galvanizing of the decorative panels.

6.0 IDENTIFICATION, SHIPPING & HANDLING. Identify the station of the panel on the shop drawing to aid in proper field installation.

7.0 INSTALLATION. Installation of the panels shall be to the lines and grades shown on the plans and in accordance with the Pedestrian Railing plans, notes and details.

Test fit the first Decorative Panel in place on the first length of installed Pedestrian Railing prior to the installation of any other railing sections. Verify to the satisfaction of the Engineer that the panel is in plane and the respective edges are parallel to both railing posts and roadway slope.

8.0 SUBMITTALS. Submit shop drawings for the decorative panel. Shop drawings shall include, but not be limited to, the following:

A. Layout of pedestrian railing showing location and dimensions of all decorative and railing panel lengths with station locations for decorative panels.
B. Complete details of all components and sections showing all materials used.
C. A listing of all applicable KYTC, ASTM and AASHTO specifications.
D. Name and address of the fabricator, and location of the fabrication plant.
E. Name and telephone number of the fabricator's representative who will be responsible for coordination of production, inspection, sampling and testing.
F. Cutting procedures used in the fabrication clearly described and detailed
G. Welding procedures used in the fabrication clearly described and detailed.
H. Table of image type, station, grade, angle of panel corners for each panel.
I. Connection detail for bolting the Decorative Fence Panels to the stiles and rails of the Pedestrian Railing.
J. Touch up procedures for galvanized finish scratched during shipping or handling.

Decorative Fence Panel shop drawings and Pedestrian Railing shop drawings shall be coordinated to ensure fit when field assembled. Do not perform any fabrication until the approved shop drawings are in the hands of the Inspector, panel Manufacturer and railing Fabricator and the Engineer has authorized fabrication.

9.0 MEASUREMENT. The Department will measure the quantity by each individual unit.

10.0 PAYMENT. The Department will make payment for the completed and accepted quantities under the following:

Code	Pay Item	Pay Unit

24629EC DECORATIVE FENCE PANEL EACH

The Department will consider payment as full compensation for all work required under this section.

attachments (**Exhibits with panel patterns**)

SPECIAL NOTE FOR SHOP DRAWINGS AND WELDING PROCEDURES

This Special Note replaces Subsection 607.03.01 of the Department's 2012 Standard Specifications for Road and Bridge Construction in its entirety.

607.03.01 Shop Drawings and Welding Procedures. Submit detailed shop drawings and welding procedures to the Division of Structural Design or their designated representative ("Reviewer"). The Department will furnish plans showing sufficient details for the Contractor to prepare detailed shop drawings. Include welding procedures and details, when required, as part of the shop drawings. The Department will not consider the shop drawing submittal process to be complete without the submittal of welding procedures.

Submit a Schedule no later than thirty calendar days prior to the first submittal listing all anticipated shop drawing packages for the project and the estimated submittal dates. The Schedule shall be updated and resubmitted to the Engineer on the first day of each calendar month until all required submittals have been approved.

Shop drawings shall be submitted in a logical order with all relevant drawings and construction procedures necessary to perform a complete review.

Submit shop drawings in electronic format. Make all drawing submittals in a 22 inch by 36 inch Portable Document Format which will produce clear prints and sharp lines on both 11 inch by 17 inch prints and 22 inch by 36 inch prints ("PDF Prints"). The Department reserves the right to require hard copy prints on a case-by-case basis.

Submission of two or three-dimensional computer modeling data will not by itself constitute a complete shop drawing submittal. The use of two- or three-dimensional computer modeling techniques to facilitate fabrication will not relieve the fabricator from providing detailed shop drawings of all bridge members and components for the Department's records.

Submit initially to the Reviewer PDF prints of the detailed shop drawings and welding procedures. All shop drawings and procedures shall bear the Contractor's stamp with an acknowledgment that he has reviewed the submittal. Each sheet will be electronically stamped by the Reviewer. The Reviewer will return one PDF file of reviewed shop drawings with all required corrections noted. When corrections are necessary, submit PDF prints of the corrected drawings. After the final review when no additional corrections are necessary, the Reviewer will forward the correct shop drawing PDF Prints, stamped with the Reviewer's Stamp indicating approval (or conditional approval,) to the DOSD Shop Plan Coordinator for distribution. Only plans submitted directly to the Shop Plan Coordinator by the Reviewer will be distributed, and only plans electronically stamped "distributed by the Division of Structural Design" are to be used for fabrication.

After fabrication is complete and the Engineer has approved the structural steel for shipment, furnish to the Engineer one electronic set of the as-built shop drawings, including the welding procedures, as PDF Prints.

Review cycles will begin the first Business Day after a submittal is received ("logged"), or the next Business Day after the submittal date indicated on the most recently submitted Schedule, whichever occurs later. Submittals received after 2:00 PM Eastern Time will be logged as the next Business Day following receipt of the submission. 'Business Days' are weekdays, Monday through Friday except official Department holidays.

Within three (3) Business Days from the date a shop drawing package is logged, the Reviewer will determine if all relevant drawings and construction procedures have been

submitted. If a submission is incomplete or otherwise requires additional information or data to properly complete the review, the review cycle for the submission will be reset and the cycle will begin as specified in the previous paragraph once all required information is received (logged.)

Review cycle durations for shop drawings deemed complete by the Reviewer are as follows:

Allow at minimum 21 Business Days for review of shop drawing submissions of welded plate girders or rolled steel sections.

Allow at minimum 42 Business Days for review of shop drawing submissions for the tied arch rib, tie girder, knuckle, hanger anchors and floor beams.

No claims for delay will be considered for shop drawing reviews when the Engineer has indicated that relevant drawings or construction procedures are insufficient for a thorough review. No claims for delay will be considered for shop drawing reviews when information relevant to the submittal review is still in the process of being developed. Additional time to review requested changes to any relevant drawings and construction procedures will not be considered cause for delay claims.

Do not make changes to any drawing after the Engineer has reviewed it without the Engineer's written approval or written direction.

Only make substitutions of sections different from those shown on the drawings when the Engineer approves in writing.

Although the drawings may have been reviewed, take responsibility for the correctness of the drawings and for shop fits and field connections.

Take responsibility for any material ordered or work done before the Engineer reviews the drawings and welding procedures.

When design drawings differ from the shop drawings, the design drawings govern. When the requirements of this section differ from the shop drawings, the requirements of this section govern.

When the design drawings differ from the requirements of this section, the design drawings govern.

SPECIAL NOTE FOR HELPER BOAT
Kentucky Lake Bridge

1.0 SCOPE OF WORK. Bidders are advised that there is commercial barge traffic on this portion of Kentucky Lake throughout the year.

This work is to provide a helper boat with pilot to assist commercial tows upon request by commercial barge pilots transiting under the bridge.

It is anticipated that not all Commercial Vessels will request a helper boat. Requests for a helper boat will be at the discretion of the commercial barge pilot transiting the bridge on the navigable waterway.

2.0 EQUIPMENT. The equivalent utility of an 1800 horsepower (1800 HP) tow boat shall be provided. When not servicing requests from transiting Commercial Barge Pilots, the helper boat may be used by the Contractor for other construction activities, but shall be made available to assist tows when requested without delay to the needs of commercial navigation.

During the phases of work listed in Section 5.0 herein, the helper boat will be moored or docked on-site or within one mile of the project site at all times except when in use as a helper boat or assisting construction activities.

3.0 PERSONNEL. The pilot of the helper boat shall have and maintain a Transportation Worker Identification Card (TWIC) and the Merchant Mariner Credential (MMC) for the Pilot of a Towing Vessel appropriate for the class and size of tow boat being operated as a helper boat. One or more relief pilots with the same credentials as listed above shall also be retained by the Contractor such that 24 hours a day, during the durations of the contract when a helper boat is an active requirement, a qualified and licensed pilot is always available to operate the helper boat.

4.0 REQUIREMENTS. The United States Coast Guard (USCG or Coast Guard) regulates all work on or in navigable waters. Comply with all permit conditions and Coast Guard regulations.

Provide regular advance notifications in writing to the Engineer of upcoming work activities on the lake for forwarding to the USCG and the United States Army Corps of Engineers (USACE) for the agencies' issuance as Notices to Mariners.

Three months prior to any work requiring a helper boat to be active, the Contractor shall submit to the Engineer for approval the Chain of Communication by which the Commercial Industry will contact the Contractor's Helper Boat Pilot for requesting assistance in transiting the bridge site.

Two months prior to any work requiring a helper boat, the Contractor shall participate in a meeting with the Department, the USCG, and representatives of the commercial towing industry for the purpose of advance coordination and safety preparation.

5.0 CONTRACT PHASES AND INSTANCES REQUIRING HELPER BOAT. (Note: All references to pier and span identifiers for both the existing Eggner's Ferry Bridge and the proposed new bridge conform to the Contract Drawings.)

The existing navigation channel span of the Eggner's Ferry Bridge is designated as Span 'B'.

Provide a helper boat upon request of the Pilot of a Commercial Towing Vessel transiting the site when any work activity results in temporary reductions to the navigational clearances of Span 'B'.

Construction of Pier 4 foundation and the subsequent work for Pier 4 are anticipated to obstruct the horizontal navigation clearance in Span 'B' to the extent that commercial tows will be effectively blocked from Span 'B'.

Coordinate the appropriate time and date with the Department and the USCG for shifting the navigation channel span to the adjacent Span 'C'.

From the time the navigation channel is shifted to Span 'C' until demolition and removal of the existing bridge channel spans and channel piers has been completed, provide a helper boat upon request of a Pilot of a Towing Vessel transiting the site. The determination that all debris from the existing bridge has been satisfactorily removed will be made by the US Army Corps of Engineers.

Provide a helper boat upon request of the Pilot of a Towing Vessel transiting the site for any subsequent Contractor operations or instances that potentially impede commercial towing in the lake thus requiring a helper boat.

6.0 DEMOBILIZATION OF HELPER BOAT. Submit to the Engineer a request in writing to discontinue the Helper Boat service certifying that there will be no subsequent Contractor operations or instances requiring a helper boat. Do not demobilize the Helper Boat until authorized in writing by the Engineer.

7.0 RECOVERY OF DAMAGES. In the event that any damages to the Department, to the public, or to commercial towing interests result from the Contractor's failure to provide a helper boat when requested during the contract phases or instances requiring a helper boat as described above, such damages will be the responsibility of the Contractor. The Department will seek recovery from the Contractor of any and all damages resulting from failure to provide a helper boat in accordance with this special note.

8.0 MEASUREMENT. When Helper Boat is included in the Bid Proposal as a separate bid item, the Department will measure all work performed as part of providing a Helper Boat as a lump sum.

9.0 PAYMENT. The Department will pay for the quantities at the contract unit price as follows.

When Helper Boat is included in the Bid Proposal as a separate bid item, the Department will make partial payments for Helper Boat in 4 equal or approximately equal payments.

1) 25 percent after the Helper Boat has assisted ten (10) Commercial Tows at the request of the Commercial Tow Pilots transiting the bridge, or with Payment 2, whichever comes first.
2) 25 percent when all proposed concrete bridge pier construction is complete.

3) 25 percent when the proposed bridge is substantially complete and has been opened to traffic.

4) 25 percent after removal of the existing Eggner's Ferry Bridge Channel Piers and Spans and after the Helper Boat has been authorized in writing by the Engineer to be demobilized.

The Department will consider payment as full compensation for all work required under this section. Payment will be made under:

BID ITEM CODE		
24620EC	HELPER BOAT	LS

SPECIAL NOTE FOR REMOVAL OF EXISTING BRIDGE

1.0 DESCRIPTION. The Contractor shall remove the existing Eggner's Ferry Bridge structure to the limits indicated on the plans in accordance with KYTC Standard Specification Section 203 "Removal of Structures and Obstructions" and the following special note. Where a conflict exists between these special notes and Section 203, the provisions in these special notes shall govern.

2.0 CONSTRUCTION

Special conditions within the project permits relate to demolition and removal of the Eggner's Ferry Bridge. Comply with the conditions stated in all permits.

Take ownership and dispose of all materials removed with the exception of the Span 'E' Truss.

Existing span 'E' is identified as the parallel chord truss replacement superstructure erected in 2012 after a vessel collision collapsed the original span. Salvage the steel superstructure truss of existing span 'E'. After removing the bridge deck slab from the structural steel, lower the truss Span 'E' intact onto a barge and transport to the Eddyville Port Authority for storage. The Span 'E' truss shall remain the property of the Department.

Obtain a lease from the Port for a period of six months, on a monthly basis. If the Port is unavailable to store the steel span, the Contractor shall coordinate with other potential storage location property owners and with the Department to secure an alternate lease. After six months, transfer the lease to the Department.

The representation of existing bridge on plan sheets is for information only. The contractor is referred to the existing bridge plans to determine approximate quantities for removal. The contractor is responsible for location and protection of all existing utilities.

The production of the demolition plan and procedures is the responsibility of the contractor. The demolition plan must clearly demonstrate the safety and feasibility of all proposed operations. All submittal components must be sealed by a professional engineer licensed in the Commonwealth of Kentucky.

Submit the demolition plan to the engineer six months prior to scheduled demolition. The engineer will coordinate submission to the United States Coast Guard. Do not proceed with demolition until the engineer has received a copy of written acceptance of the demolition plan from the United States Coast Guard. Do not proceed with demolition until the demolition plan is approved by the engineer.

Maintain a detailed schedule of the entire removal and demolition sequence. Submit the schedule to the engineer two months prior to the start of demolition work and thereafter as changes are made. The engineer will coordinate with USCG and USACE for notice to mariners for the demolition operations as scheduled.

Prepare plans for protection of traffic including vehicular, pedestrian, bicycle, commercial vessels and recreational boaters. Traffic will not be allowed on the replacement bridge during blasting.

Maintain navigation lighting on the existing bridge in accordance with USCG requirements including the duration after permanent power has been installed on the replacement bridge structure.

Coordinate temporary access to the work site with the department. The contractor may construct pile supported temporary docks only as approved by the engineer. The construction of an additional temporary causeway into the lake will not be permitted. The contractor is not permitted to place fill material in the lake for any reason. The contractor is not permitted to remove any existing material of the causeway unless otherwise shown on the Roadway plans.

Coordinate temporary construction entrances from US68/KY80 with the department. Super-structure concrete deck shall be removed prior to removing any structural steel members. Take necessary measures to prevent any debris from falling into the water.

Blasting of superstructure steel truss spans with explosives is permitted.

Conduct a preconstruction survey of the lake bottom to establish any materials existing prior to construction or demolition. Provide the report of the preconstruction survey to the Engineer. The Contractor shall be responsible to remove all materials identified by the USACE Navigation Branch after the post-demolition sweep survey. Remove upper portions of the deep water truss supporting piers down to elevation 330.0. Remove all of the approach span piers down to the surrounding bottom elevation or mud line.

Fill cavities left by the end bent structure removal using approved similar causeway materials to the surface and grade to blend with adjacent contours of the existing causeway.

8.0 MEASUREMENT. The Department will measure all work performed as part of Removing the Existing Bridge as a lump sum.

9.0 PAYMENT. The Department will consider payment as full compensation for all work required under this section.

The Contractor shall submit a schedule of costs to the Engineer related to the lowering, transport and storage of the Existing Span 'E' to Eddyville Port. The Department reserves the right to adjust the amount of the Lump Sum if no market for storing, selling or renting the span perceived.

Payment will be made under:

BID ITEM CODE		
02731	REMOVE STRUCTURE	LS

SPECIAL NOTE FOR CONSTRUCTION TRAILER

1.0 DESCRIPTION. A construction trailer shall be provided and maintained for the exclusive use of the Engineer/Project Manager and their staff for the duration of this project. The duration of the project shall be defined as the period between the occupancy date defined in Section 2.3 herein and the later of the completion date in this proposal or the actual completion date when all requirements of the Contract Documents have been fulfilled. All costs associated with Federal, State, and Local regulatory permits and inspections, and setup/removal of the construction trailer shall be that of the Contractor.

The construction trailer shall be weatherproof, wind-tight, and dust-proof with level and solid floors. The contractor is to retain ownership of this construction trailer and be responsible for its removal upon completion of the project.

2.0 REQUIREMENTS.

2.1 Location. The construction trailer shall be located on a site that is mutually agreed to by the Engineer/Project Manager and the Contractor in a location that is convenient to the site and will not affect progression of work.

The construction trailer may be a trailer or a permanent building and shall be in accordance with applicable state and local codes and KYOSHA/OSHA requirements.

2.2 Minimum Requirements. The construction trailer shall be a minimum of 720 sq. ft. with an 8 ft. minimum height from the floor to the ceiling. This construction trailer shall have at least two doors. At least one of the doors must be able to be locked from the inside, and the locks shall be keyed the same for all doors. Five key sets to the office shall be furnished by the Contractor. There shall be a minimum of 8 windows that are at least 5 sq. ft. each. Windows shall be equipped with screens and approved locking mechanisms and shall be sliding or hinged. Windows shall also be provided with approved coverings.

The construction trailer shall have a minimum of two offices (120 sq. ft. each) with inside doors and an area large enough to accommodate jobsite meetings for KYTC personnel, Contractor/Sub-Contractor personnel, and Vendors.

2.3 Other Requirements. The construction trailer that is provided for the use of the Engineer/Project Manager shall be fully furnished and ready for occupancy at least two days prior to the start of actual construction.

The Contractor shall be responsible for protecting the construction trailer from fire, flooding, and theft throughout the duration of the project. If there is any loss of property to KYTC due to theft, fire, or natural disaster, it shall be the responsibility of the Contractor.

The construction trailer shall have cooling/heating capabilities to maintain a uniform temperature between 68°F and 80°F.

The electrical system for the construction trailer shall be 100 amp minimum with 120/240 volt electrical service. The construction trailer shall be furnished with a

minimum of two two-prong receptacles in each office, storage room and meeting area to accommodate all required electrical equipment.

The Contractor shall be responsible for regular weekly trash disposal for the construction trailer.

The construction trailer shall have sufficient parking to accommodate KYTC personnel regularly assigned to the project location and their agents and visitors with at the minimum a compacted aggregate parking lot. The Contractor shall furnish security lighting for the parking area.

The construction trailer shall have a minimum of one separate, lockable indoor storage area, (minimum 100 sq. ft.) to adequately store equipment (i.e. nuclear density gauge, cylinder molds, concrete testing equipment). This storage building shall have the capacity to secure a nuclear density machine by means of double lock system. This storage area shall have a concrete cylinder tank (minimum 150 gal) that can be maintained at a temperature between 68°F and 80°F.

The Contractor shall be responsible for furnishing an internet connection possible of 1.0 Mb connection speed to the entire construction trailer via wi-fi or a minimum of two wired connections in each office, storage area and meeting area throughout the duration of the project.

The Contractor shall furnish a sign for the construction trailer that distinguishes the office as the KYTC Field Office.

2.4 Field Office Equipment and Supplies.

Description	Quantity
Broom and Dust Pan	1
Coat Rack	1
Toilet Facilities	Yes
Drinking Water (Hot and Cold)	Yes
Cleaning Supplies	Yes
Fire Extinguishers	2
First-Aid Kit	1
Blood Borne Pathogen Kit	1
Smoke Detector	1
Calculator	2
File Cabinets (minimum 4 drawers with locks)	3
Office Desk	4
Office Chairs	4
Folding Table	2
Folding Chairs	12
Drafting Table	1
Drafting Stool	1
Telephone Lines	2
Voice Mail	1
Telephones (One phone shall be cordless with 900 MHz)	3
Fax Machine (Separate line from the ones listed above)	1
Shelving	24 lin. ft.
Carbon Monoxide Detector	1
Refrigerator/Freezer	1

Microwave Oven (1.6 cu ft)	1
Waste Paper Baskets	4
Paper Shredder	1
(Minimum 12 sheet capacity with 5 gallon waste basket)	
Copier	1
Printer	1
Scanner	1

(The Contractor may provide an all-in-one Copier/Printer/Scanner as long as what is provided has the capability to print on plain paper for letter, legal, and 11"x17" sizes and is able to reduce or increase paper size and has an automatic feeder. The paper, toner, and ink cartridges shall be provided by the Contractor.)

The construction trailer and all the Equipment and Supplies shall be the responsibility of the Contractor throughout the duration of the contract, and the Contractor will retain ownership at the conclusion of the project.

3.0 MEASUREMENT. The construction trailer will be measured as a lump sum. The payment schedule is to be mutually agreed upon by both the contractor and KYTC. KYTC will provide a two-week notice minimum to the Contractor of when the construction trailer will be vacated.

4.0 PAYMENT. The construction trailer will be paid for as a lump sum. All cost associated with the Field Office shall be the responsibility of the Contractor.

Code	Pay Item	Pay Unit
21325ND	CONSTRUCTION TRAILER	LS

SPECIAL NOTE FOR WEB CAMERA CONST MONITORING SYSTEM

1.0 GENERAL

1.01 RELATED DOCUMENTS

A. Drawings and general provisions of the Contract, including General and Supplementary Conditions and Division 1 Specification Sections, apply to this Section.

1.02 SUMMARY

A. Section includes an integrated, professional-grade, high resolution digital webcam system designed specifically for the construction industry as a turnkey package including camera(s) and related hardware, mounting equipment, software, wireless cellular data transmission service, website hosting, image hosting and storage, online interface for the system and technical support.

B. Related Sections:
1. Division 1 Section "Photographic Documentation" for periodic construction photographs.
2. Division 1 Section "Closeout Procedures" for submitting digital photographs as Project Record Documents at Project closeout.

1.03 DEFINITIONS

A. CCD: Charge-coupled device.

B. System Vendor: Provider of camera system hardware and software and host maintaining off-site server, data storage devices, and troubleshooting software and equipment. Contractor shall maintain an active contract for System Service for duration of Contract Time unless other term is agreed upon in writing by the Owner. Cost for System Service shall be included in the Contract Sum.

C. System Service: Host services provided by System Vendor including image acquisition, transfer, backup, periodic upgrades to the system, viewing access via a maintained interface on the Internet and on-line storage of images for duration of the Service Contract.

1.04 SUBMITTALS

A. Shop Drawings:
1. Key Plan: Submit key plan of Project site with notation of vantage points marked for location and direction of each camera. Indicate camera mounting heights relative to ground or bridge deck elevation.

B. Quality Assurance Submittals:

1. Manufacturer’s Instructions: Follow manufacturer’s installation and testing instructions.

C. Closeout Submittals:

1. Digital Images: Submit digital still images exactly as originally recorded in the digital camera, without alteration, manipulation, editing, or modifications using image-editing software.
    a. Date and Time: Include date and time in filename for each image.
    b. Format: Submit a sortable/identifiable archive of all digital still images on an external hard drive or DVD format.
2. Time-Lapse "Movie": Compile select digital still images into a time-lapse movie of the construction period. Optimize images included and run-time length of movie to suit Owner's requirements.

1.05 QUALITY ASSURANCE

A. Electrical Components: Listed and labeled as defined in NFPA 70, by a qualified testing agency, and marked for intended location and application.

1. Factory assemble camera system from components bearing UL Classification Marking indicating that materials have been produced under UL's Classification and Follow-Up Service.

B. Comply with NECA 1, "Standard Practices for Good Workmanship in Electrical Construction."

C. Comply with NFPA 70, "National Electrical Code."

D. Manufacturer Qualifications: Company specializing in manufacturing Products specified in this Section with minimum five years documented experience.

1.06 DELIVERY, STORAGE, AND HANDLING

A. Deliver materials in original packages and containers with seals unbroken and bearing manufacturer's labels.

B. Store materials to comply with manufacturer's directions to prevent deterioration from moisture, heat, cold, direct sunlight, or other causes.

1.07 PROJECT CONDITIONS

A. Environmental Conditions: Capable of withstanding the following environmental conditions without mechanical or electrical damage or degradation of operating capability:

1. Exterior Environment: System components installed in locations exposed to weather shall be rated for continuous operation in ambient

temperatures of minus 10 to plus 120 deg F dry bulb and 20 to 90 percent relative humidity, condensing. Rate for continuous operation when exposed to rain as specified in NEMA 250, winds up to 85 mph. NEMA 250, Type 3R enclosures.

1.08 COORDINATION

A. Coordinate installation of cameras so that system is fully operational prior to commencement of construction operations.

B. Coordinate layout and installation of cameras to avoid interference from trees or other obstructions and to prevent sunlight and light from fixtures entering directly into the camera lens.

C. Coordinate layout and installation of cameras to avoid interference with construction operations.

1.09 WARRANTY

A. Special Warranty: Manufacturer's standard form in which manufacturer agrees to repair or replace components of cameras and equipment related to camera operation that fail in materials or workmanship within specified warranty period. Failures include, but are not limited to, the following:

1. Failure of system to meet performance requirements.
2. Faulty operation of hardware and software.
3. Defects in other components of the work.

B. Warranty Period: Lifetime product warranty required

1.10 USAGE RIGHTS

A. Obtain and transfer copyright usage rights to Owner for unlimited reproduction of photographs and archives generated by the system.

B. Contractor shall understand that photographs and archives generated by the camera system become the mutual property of the Owner and System Vendor and cannot be used for advertisement or publicity reasons without the expressed written consent of the Owner and System Vendor.

1.11 MAINTENANCE

A. Maintenance Service: Provide service and maintenance of camera system for entire Construction period.

1. Examine monthly; clean and adjust equipment.
2. Provide remote emergency repair service by System Vendor 24 hours a day, seven days a week to ensure uninterrupted camera service. Provide personnel on-site to assist System Vendor as needed during working

hours. Provide replacement parts and components due to system failure, damage, or theft within two business days.

3. Maintenance service shall not be assigned or transferred to another agent or subcontractor without prior written consent of Owner.

4. Require system vendor to proactively monitor the system by means of service and maintenance contract. If no connection is made within a span of time not to exceed 24 hours during regular business days, require system vendor to notify Contractor and commence troubleshooting.

   a. Provide necessary staff during troubleshooting to verify power availability, to remove and replace system, and to verify functioning phone lines or internet access for dialup and Ethernet based systems.

2.0 PRODUCTS

2.01 MANUFACTURERS

A. Manufacturers: Subject to compliance with requirements, provide products by the following:

1. OxBlue, Inc., 888-849-2583, http://www.OxBlue.com/.
2. EarthCam, Inc., 800-327-8422, http://www.EarthCam.net

B. Substitutions: As approved by the Owner.

2.02 SYSTEM REQUIREMENTS

A. The indoor/outdoor camera system shall consist of a tamper and impact resistant, discreet, fixed pole or wall-mount enclosure with integrated fixed camera, lens and controller.

B The cameras shall have the ability to take a high-resolution **8.0 Megapixel** digital still images of the construction site at a set time interval, every 15 minutes, and upload the still images over a wireless cellular modem to a secure, password-protected website.

2.03 EQUIPMENT

A. Camera: Integrated high definition camera and lens assembly consisting of a charge coupled device (CCD) camera with a remotely controlled focal length lens mounted as a permanent module with the following features:

1. Digital Still Image Resolution: Minimum sensor size of **8.0 megapixels**, and at an image resolution of not less than 3264 x 2448 pixels.
2. Memory: Unlimited remote storage provided by the system vendor.
3. Lens: 6.3 - 63 mm (38-380mm equivalent in 35mm photography), system capable of ten times (10x) optical zoom. Include a wide angle conversion lens with a 0.66x factor. Provide capability to remotely control focal length lens to change resolution, focus and zoom.

4. Focus Mode: iESP auto, Spot AF, Selective AF target, Manual.
5. Metering Mode: Digital iESP multi-pattern auto TTL, Spot metering, Center Weighted metering.
6. Data Connection: Provide one of the following:
    a. In areas with cellular coverage, operate cameras via built-in cellular data connection provided and maintained by the system vendor.
    b. In areas without cellular coverage, operate cameras via an RJ-45 Ethernet data connection over broadband or satellite internet access provided and maintained by the Contractor.
7. Electrical Operation: 120 VAC at maximum 83 Watts.

B. Quantity of Cameras: Five (5)

C. Camera Enclosure: Construct tamper and impact resistant housing of extruded aluminum, die cast aluminum, and sheet aluminum body with factory-applied powder coated finish.
1. Construct with forward opening, front hinged lid, allowing easy access to camera mounting sled.
2. Provide rear link-lock latch, manufactured from stainless steel, suitable for use with pad lock.
3. Equip with heater, blower and thermostat.

2.04 INTERFACE AND ONLINE ACCESS

A. Remote Access: Contractor’s System Vendor shall provide an online interface system to allow viewing of all high-definition digital still images captured and stored during construction, from any location with internet access and with password protection.
1. Maintain images on the System Vendor's website for reference available at all times during construction and for not less than 90 days after Final Completion.

B. Online Interface:
1. The online interface system shall be accessible by an unlimited number of human users.
2. System shall display Project name and Owner Logo.
3. The system shall display online time-lapse videos and allow for videos to be downloaded by users.
4. Navigation: Provide calendar based navigation system for selecting specific images.
5. Zoom: Provide pan and zoom capability for zooming into high definition images.
6. User Screen Viewing Options:
    a. Dynamic Calendar: Provide screen showing calendar in which each day displays an image for that day.

b. Project Dashboard: Provide screen allowing user to view multiple sites at one time.
c. Quad View: Provide screen showing four windows, allowing user to view last four days, weeks, or months on one screen.
d. Split Screen: Provide screen showing two discrete images side by side, from same camera or from two different cameras.
e. Overlay Mode: Provide screen showing two discrete images overlaid, allowing user to determine differences between the two.
f. Full-Screen: Provide screen maximizing view of images on users monitor.

7. Email: Provide capability to email photos with comments from within the system.
8. Slideshow: Provide capability to browse through images, moving forward and backward in time by individual image and by day.

3.0 EXECUTION

3.01 PREPARATION

A. Unpack camera system components and save packing materials (box and foam) for future shipment of camera system including associated appurtenances and mounting equipment to Owner or Manufacturer as required.

3.02 INSTALLATION

A. General:

1. Install camera system in accordance with manufacturer's printed instructions, State and Municipality codes and requirements and approved submittals. The Owner shall have final approval of all camera locations.
2. Install units plumb and at proper angle to provide maximum field of view of on-site operations.
3. Securely and rigidly anchor products in place.
4. Connect cameras to power.

B. Location – Cameras shall be located to provide coverage of full project site.

1. One (1) camera shall be located near the western project limit to capture roadway construction.
2. One (1) camera shall be located near the west bank of Kentucky Lake to capture roadway and bridge construction.
3. One (1) camera shall be located on the bridge to capture bridge construction.
4. One (1) camera shall be located near the east bank of Kentucky Lake to capture roadway and bridge construction.
5. One (1) camera shall be located near the eastern project limit to capture roadway construction.
6. The Owner shall have final approval of all camera locations.

C. Relocate camera as directed by Owner during construction progress.

1. Each camera may be relocated up to two (2) times prior to Final Completion.
2. Camera positions may include attachment to existing construction, new construction and temporary facilities.

D. Position camera so that field of view of approximately 77 degrees covers intended area of site.

1. Install camera at elevation that will provide uncompromised visual coverage.
2. Install camera so that position of sun or man made light sources will not come into direct contact with field of view of camera at any time during construction.

3.03 FIELD QUALITY CONTROL

A. Preinstallation Testing: Test camera on site at ground level prior to mounting unit in its intended elevated position.

1. Contact System Vendor not less than 24 hours in advance of installation for testing.
2. Connect unit.
3. After 30 minutes contact System Vendor and require System Vendor to remotely confirm camera is operating properly.
4. Install cameras in approved locations.

3.04 CLEANING

A. Clean installed items using methods and materials recommended in writing by manufacturer.

B. Clean camera system components, including camera-housing windows, lenses, and monitor screens.

3.05 INSTRUCTION

A. Engage a factory-authorized service representative by phone to instruct Contractors personnel in procedures to adjust and maintain camera equipment.

1. Instruct personnel on procedures and schedules for troubleshooting and maintaining equipment.
2. Explain methods of determining optimum alignment and adjustment of components.

3.06 OPERATION, TERMINATION, AND REMOVAL

A. Maintenance: Maintain camera equipment in good operating condition on a 24-hour basis until removal.

B. Termination and Removal: Remove camera system after Final Completion of the project and with approval from Owner. Complete or, if necessary, restore permanent construction that may have been delayed because of interference with camera system. Repair damaged Work, clean exposed surfaces, and replace construction that cannot be satisfactorily repaired.

1. Camera system including associated appurtenances and mounting equipment are property of Owner.

3.07 METHOD OF MEASUREMENT

A. When WEB CAMERA CONST MONITORING SYSTEM is included in the Bid Proposal as a separate bid item, the Department will measure the work performed as part of providing WEB CAMERA CONST MONITORING SYSTEM as a lump sum.

3.08 PAYMENT

A. The Department will pay for the quantities at the contract unit price. When WEB CAMERA CONST MONITORING SYSTEM is included in the Bid Proposal as a separate bid item the Department will make partial payments for WEB CAMERA CONST MONITORING SYSTEM in two (2) equal or approximately equal payments.

1. 50 percent after the system is installed and fully operational.
2. 50 percent after all Closeout Submittals have been submitted and accepted by the Department.

B. The Department will consider payment as full compensation for all work required under this section.

1. Payment will be made under:

Bid Item Code		
23912EC	WEB CAMERA CONST MONITORING SYSTEM	LS

1

END OF SECTION

Special Note for CPM Scheduling

A. General.

Contrary to Kentucky Standard Specifications 108.07.04, additional contract time will only be added when the Engineer deems the critical path of the project has been affected. Create the progress schedule required for this project using the critical path method (CPM). The Contractor shall designate a Schedule Representative who shall be responsible for coordinating with the Engineer during the preparation and maintenance of the schedule. The contractor shall submit an interim schedule followed by a baseline schedule, or only a baseline schedule, depending on when the contractor starts work as described below.

B. Interim Schedule.

If the Contractor starts work within 15 days of the Notice to Begin Work, they shall submit an interim schedule. The interim schedule will be in CPM schedule format. The interim schedule shall include detailed activities for the work to be accomplished during the first 30 days of the Contract, and summary activities for the balance of the work. The interim schedule, if required, shall be submitted at the Preconstruction Conference. No work shall begin without the submission of an interim schedule.

C. *Baseline Schedule.*

The Contractor shall submit a baseline schedule as outlined in the submission requirements section (C.2) within 15 days of the Notice to Begin Work. No pay estimates will be processed after 15 days without the submission of the baseline schedule. The baseline schedule will be in CPM schedule format and as described below. The Engineer will review the baseline schedule and will "accept", "accept as noted" or "reject" the schedule within 5 days of receipt. If the Engineer does not provide written notification regarding the disposition of the baseline schedule within 5 days, the submission will be considered "accepted."

For baseline schedules that are "accepted as noted", the Contractor shall make the necessary revisions and resubmit the revised schedule within 3 days. The Engineer will only "reject" baseline schedules that are not in compliance with contract requirements.

For baseline schedules that are "rejected", the Engineer shall indicate in writing portions of the schedule that are not in compliance with the contract requirements. The Project Engineer shall conduct a mandatory meeting with the Contractor and the Contractor's Schedule Representative within 5 days of the Engineer's written notice. The purpose of this meeting is to resolve disputes with the baseline schedule so that it may be resubmitted. The Contractor shall provide clarification and all additional information necessary for the Engineer within 3 days of this meeting. The Contractor shall submit the revised Baseline Schedule to the Engineer for review and acceptance within 3 days of this meeting.

No pay estimates will be generated until the baseline schedule is "accepted" or "accepted as noted." In the event the baseline schedule is not "accepted" within 90 days of the Notice to Begin Work, all work shall cease on the project until the baseline schedule is "accepted". The incurred delays from the "cease work order" will be the contractor's responsibility and will not be considered for time extension. Any claims associated with time impacts for work performed or delay experienced prior to the baseline schedule being "accepted" or "accepted as noted" will be evaluated at the sole discretion of the Engineer. "Acceptance" by the Engineer will not relieve the Contractor of their responsibilities for compliance with specifications and contract requirements or for the accuracy or feasibility of the schedule.

"Acceptance" of the baseline schedule does not revise the Contract Documents. The baseline schedule must be "accepted" or "accepted as noted" by the Engineer prior to the Engineer evaluating any contractor claims associated with time impacts.

The Engineer's review of the baseline schedule will be for compliance with the specifications and contract requirements. "Acceptance" by the Engineer will not relieve the Contractor of any of their responsibilities for the accuracy or feasibility of the schedule.

1. Schedule Requirements.

Generate and submit an electronic copy ofthe baseline schedule using Primavera P6 V7.0 by Primavera Systems Inc., Bala Cynwyd, PA, or equivalent electronically transferable software. The Contractor's costs associated with these provisions should be incorporated into the bid item for the progress schedule. Provide and maintain current through the life of the contract three licenses of the same software for the Engineer’s use.

Provide a calendar day schedule that shows the various activities of work in sufficient detail to demonstrate a reasonable and workable plan to complete the Project by the Original Contract Completion Date. Show the order and interdependence of activities and the sequence for accomplishing the work. Describe all activities in sufficient detail so that the Engineer can readily identify the work and measure the progress of each activity. The baseline schedule must reflect the scope of work, required phasing, maintenance of traffic requirements, interim completion dates, the Completion Date, and other project milestones established in the Contract Documents. Include activities for submittals, working drawings, shop drawing preparation, submittal review time for the Department shop drawings, material procurement and fabrication, and the delivery of materials, plant, and equipment, and other similar activities.

The Contractor shall be responsible for assuring all work, including all subcontractor's work, is included in the schedule. The Contractor shall be responsible for assuring that all work sequences are logical and that the schedule indicates a coordinated plan.

Failure by the Contractor to include any element of work required for performance of the

Contract shall not excuse the Contractor from completing all work within the required time. Omissions and errors will be corrected as described in Section F or H in this note and will not affect contract time.

a) Administrative Identifier Information.

1. Project Number
2. County
3. Route Number
4. Item Number
5. CID Number
6. Award Date
7. Date of Notice to Begin Work
8. Completion Date
9. Contractor's Name
10. Contractor's Dated Signature
11. KYTC's Dated Accepted Signature

b) Project Activities.

i. Activity Identification (ID): Assign each activity a unique identification number. Activity ID length shall not exceed 10 characters. Assign baseline Activity ID's in sequences of 10 (e.g.; A1000, Al010, A1020). This will allow modifications and additional items to be placed into the Identification scheme easily. Once accepted, the Activity ID shall be used for the duration of the project.

ii. Activity Description: Each activity shall have a narrative description consisting of a verb or work function (e.g.; form, pour, excavate, pier #2) and an object (e.g.; slab, footing, underdrain).

iii. Activity Original Duration: Assign planned duration in calendar days for each activity. Do not exceed a duration of 20 calendar days for any construction activity unless approved by the Engineer. Do not represent the maintenance of traffic, erosion control, and other similar items as single activities extending to the Completion Date. Break these Contract Items into component activities in order to meet the duration requirements of this paragraph.

iv. Activity Relationships:

- All activities, except the first activity, shall have a predecessor(s). All activities, except the final activity, shall have a successor(s).
- Use only finish-to-start relationships with no leads or lags to link activities, or use start-to-start relationships with lags no greater than the predecessor duration to link activities.
- Use of finish-to-finish relationship is permitted when both activities are already linked with a start-to-start relationship.

c) Project Milestones.

i. Start Project: The Contractor shall include as the first milestone in the schedule, a milestone named "Start Project". The date used for this milestone is the date the contract is executed and signed by the Department.

ii. End Project Milestone: The Contractor shall include as the last activity in

the project schedule, a milestone named "End Project". The date used for this milestone is considered the project completion date.

iii. Start Phase Milestone: The Contractor shall include as the first activity for a project phase, an activity named "Start Phase X", where "X" identifies the phase of work. The Contractor may include additional milestones but, as a minimum, must include all contractual milestones.

iv. End Phase Milestone: The Contractor shall include as the last activity in a Project phase, an activity names “End Phase X” where “X” identifies the Phase of work. The Contractor may include additional milestones, but at a minimum contractual milestones.
phase of work. The Contractor may include additional milestones, but at a minimum contractual milestones.

d) Schedule Options.

The schedule may only be calculated using retained logic. Show open ends as non-critical. Schedule durations are to be contiguous. The project calendar will be based on the Contractor's plan for completing the project. However, the scheduling increment (hours or days) will be stipulated during the Preconstruction Conference. All days must remain active unless the Contractor is instructed not to work by contract documents. Total float shall be calculated as finish float.

2. Submission Requirements.

Submit all schedules within the time frames specified. Submit the schedule and information in electronic file format via email, and compact disc (CD) compatible with the Engineer's computer. Submit the following information along with the electronic baseline schedule:

a) A baseline schedule in a bar chart format including the Administrative Identifier Information discussed in Section C.1.a on the first page of the schedule. For each activity on the chart, indicate the Activity ID, Activity Description, Original Duration, Remaining Duration, Total Float, Early Start Date, Early Finish Date, and Percent Complete. Use arrows to show the relationships among activities.

b) A baseline schedule in a bar chart format, on paper. Identify the critical path of the project on the bar chart in red. The critical path is defined as; the longest path of activities in the project that determines the project completion date. The activities that make-up the critical path of activities are the "Critical Activities."

3. Submittal Cover Memo.

All submittals shall be accompanied with a brief cover memo containing:

- Identification of the submission as the Baseline Schedule

- Administrative Identifier Information (see section C.l.a)
- Any critical notes as determined by the Contractor

An example Cover Memo is provided in this note.

D. Float.

Use of float suppression techniques, such as; preferential sequencing (arranging critical path through activities more susceptible to Department caused delay), lag logic restraints, unrealistic activity durations, zero total or free float constraints, extending activity times, or imposing constraint dates other than as required by the contract, shall be cause for rejection of the project schedule or its updates. Schedules with negative float will also not be accepted.

1. Definitions of Float.

Total Float is the length of time along a given network path that the actual start and finish of activity(s) can be delayed without delaying the project completion date. Project Float is the length of time between the End Project Milestone and the Contract Completion Date.

2. Ownership of Float.

Float available in the schedule, at any time shall not be considered for the exclusive use of either the Department or the Contractor. During the course of contract execution, any float generated due to the efficiencies of either party is not for the sole use of the party generating the float; rather it is a shared commodity to be reasonably used by either party. Efficiencies gained as a result of favorable weather within a Biweekly period, where the number of days of normally anticipated weather is less than expected, will also contribute to the Project Float. A schedule showing work completing in less time than the contract time, and accepted by the Department, will be considered to have Project Float. Project Float will be a resource available to both the Department and the Contractor. No time extensions will be granted nor delay damages paid unless a delay occurs which impacts the project's critical path, consumes all available float and extends the work beyond the Contract Completion Date.

3. Negative Float.

Negative float is not allowed. Schedules with negative float will not be accepted. Negative float will not be a basis for requesting time extensions. Any extension of time will be addressed in accordance with the Section F. Scheduled completion date(s) that extend beyond the contract (or phase) completion date(s) may be used in computations for assessment of liquidated damages. The use of this computation is not to be construed as an order by the Department to accelerate the project.

E. Biweekly Update Schedule.

A Biweekly update schedule is a schedule in which only progress is updated from the prior data date to the current data date. Work added and/or excusable delays encountered since the prior data date must be represented as a schedule revision as described in

Section E.

1. Update Requirements.

Biweekly on a date set at the Preconstruction Conference and until Formal Acceptance, submit an updated schedule and all required information with a data date of the last day of the preceding biweekly submittal. The date for submission and data date may be adjusted to accommodate regularly scheduled progress meetings. Submit the Biweekly updated bar chart on paper and a copy of the updated schedule in electronic format in Section C.2. The Engineer shall "accept" or "reject" the schedule update within 5 days of receipt of the updated CPM schedule. The Engineer may withhold estimates if the updated schedule is not submitted as required by this section. For each updated schedule, identify the actual start and finish dates for all completed activities and the actual start date and remaining duration for all activities in progress. Provide a written narrative that identifies any changes or shifts in the critical path and submit reasons for the changes or shifts in the critical path.

Submit the following with each updated schedule:

a) CPM Schedule in Bar Chart Format

b) Electronic files (formatted as described above)

2. Submittal Cover Memo.

All update submittals shall be accompanied with a brief cover memo containing all the information require in the Baseline Submittal Cover Memo per section C.3 with the addition of:

- Baseline Report
  - Narrative of baseline expectations
  - Project completion status per baseline expectations
- Logic Report
  - Logic Modification Report per section F
  - Narrative of all logic changes and reasoning
  - Two separate CPM submissions; one reflecting the schedule without changes in logic, the other reflecting the proposed logic and the effects.
  - Description of fragnet required per section F
- Progress Report
  - Narrative of all schedule changes since last update
  - Details of each change including impact of change on the schedule, float consumption or addition, and reason causing change when float is consumed

F. Revisions.

The Work may require and/or the Contractor may make revisions to the CPM schedule. Addition of new activities (fragnets required) or new calendars or changes to existing

activities, calendars or logic constitute a revision. All revisions must be reported in a Logic Modification Report. The Logic Modification Report is a separate CPM update which includes all the changes recommended by the contractor within the current Biweekly update schedule. It shall include a Narrative explanation of the necessary changes accompanying the Biweekly update schedule. Any revision which modifies the critical path or impacts an interim date or project completion date is considered a Logic Modification. A fragnet is defined as the sequence of new activities that are proposed to be added to the existing schedule. The fragnet shall identify the predecessors to the new activities and demonstrate the impacts to successor activities. If submitted as a fragnet, the Contractor shall compute two Finish Dates. The first Finish Date shall be computed without consideration of any impact by the fragnet. The second Finish Date shall be computed with consideration of any impact by the fragnet. The Contractor shall also submit a written narrative stating the reason for the proposed revisions. The Engineer shall "accept" or "reject" proposed revisions within ten days of receipt of appropriate schedules and narrative. All approved revisions will be incorporated into the Biweekly Update Schedule which will become the Revised Biweekly Update Schedule.

G. *Time Extensions.*

The Work may require and/or the Contractor may request an extension of the Completion Date. Perform the following analysis to compute the duration of the time extension. Submit two paper copies and two electronic copies of each analysis performed.

1. Determine project progress prior to circumstance(s) necessitating the time extension. Unless the Engineer requests an interim schedule updated to the date of the circumstance alleging to have caused delay, the previous accepted Biweekly update shall be used to display the prior progress of the project. This schedule is referred to as the Un-impacted Schedule
2. Prepare a fragmentary network (fragnet) depicting the circumstance that is believed to have delayed the project.
3. Insert the fragnet into the Un-impacted Schedule, run the schedule calculations and determine the finish date. This schedule is referred to as the Impacted Schedule.
4. Compare the Impacted Schedule finish date with the Un-impacted Schedule finish date in order to determine the duration of any warranted time extension.

Submit the impacted schedule with the request for time extension. Include a narrative report describing the effects of new activities and relationships to interim and contract completion dates. All time extensions approved by the Engineer will be incorporated into the Biweekly update with the fragnet used to determine impacts incorporated into the schedule.

H. Recovery Schedule.

If the Biweekly Update Schedule or Revised Biweekly Update Schedule projects a finish date for the Project more than 14 calendar days later than the Contract Completion Date, submit a recovery schedule showing a plan to finish by the current Completion Date. The

acceptance of any schedule projecting a completion date for the Project beyond the Current Contract Completion Date does not constitute approval of a time extension or an order to accelerate. All changes to completion dates and orders to accelerate must be made via Change Order. The Department will withhold Estimates until the Engineer "accepts" the recovery schedule. The Engineer will use the schedule to evaluate time extensions and associated costs requested by the Contractor. In the event the current Completion Date is in dispute, the recovery schedule will need to be submitted once the dispute has been resolved.

I. Basis of Payment.

The Department will make partial payments according to Section 109.05 of the standard specifications and as modified by the following schedule:

1. The Department will release 50 percent of the lump sum amount bid for Project CPM Schedule to the Contractor with the first regular payable after the Engineer has "accepted" the CPM Baseline schedule submission and the Department has received the scheduling software.
2. The Department will release an additional25 percent of the lump sum amount bid for Project CPM Schedule to the Contractor with the first regular estimate payable after 50 percent of the original contract amount is complete.
3. The Department will release the remaining 25 percent of the lump sum amount bid for Project CPM Schedule to the Contractor with the first regular estimate payable after project completion.

The Department will pay for the accepted quantities at the contract price as follows:

Code	**Pay Item**	**Pay Unit**
------	Project CPM Schedule	Lump Sum

The Department will consider payment as full compensation for all work required in this provision.

SPECIAL NOTE FOR PROJECT INSPECTION BOAT

DESCRIPTION. Project Inspection Boat shall consist of providing a boat and safety equipment at the site, along with adequate training and docking facilities as specified below. The boat shall be for the exclusive use of, and operated by, the Engineer.

PROJECT INSPECTION BOAT. The boat shall not be less than 18 ft (5.5 m) in length with at least a 72-inch (1.8 m) beam, equipped with an outboard motor of at least 70 horsepower (52 kw), and shall be capable of accommodating at least 6 adult passengers, including the operator. In addition, the Engineer shall at all times retain the right to travel on, or be present on, any of the Contractor's floating plant or equipment.

The boat shall be in good condition and meet the approval of the Engineer. The boat and safety equipment shall at all times meet all applicable boating regulations of the United States Coast Guard.

The boat shall be equipped with 2 fuel tanks, complete remote control, a spotlight and an adequate whistle or horn. The motor shall be equipped with electric and hand starters, an alternator or generator, and slip clutch propeller protection. These requirements are in addition to all Coast Guard or State requirements.

The Contractor shall service, gas, oil and maintain the boat during the life of the contract unless otherwise directed by the Engineer.

TRAINING FOR DEPARTMENT PERSONNEL. The Contractor shall provide field training by someone proficient in the operation of the boat to ensure that approximately 3 to 5 employees of the Department, or their representative, are competent in the proper operation, safety features and handling on open water and while docking. The required training time is anticipated to be no more than one-half day.

INSURANCE FOR PROJECT INSPECTION BOAT. The Contractor shall furnish the Engineer with evidence that liability insurance has been obtained, with a minimum coverage of $500,000, and shall hold the Department and its representatives harmless from any and all damage to, or caused by, the boat while being operated by the Engineer.

The insurance shall be kept in effect until the project is completed, and the evidence of renewal of the policy as necessary shall be forwarded to the Engineer.

MEASUREMENT. The Department will measure all work performed as part Project Inspection Boat as a lump sum.

PAYMENT. The Department will consider payment as full compensation for all work required under this section.

Payment will be made under:

BID ITEM CODE		
24626EC	PROJECT INSPECTION BOAT	LS

10-14-2013

Special Roadway Plan Notes

For

Communicating All Promises

New Bridge and Approaches carrying US 68 and KY 80 over Kentucky Lake
Marshall/Trigg Counties
Item No 1-180.70

CONSTRUCTION NOISE

THE CONTRACTOR IS REQUIRED TO USE EQUIPMENT THAT IS OUTFITTED WITH DEVICES THAT RESTRICT THE TRANSMISSION OF NOISE AND TAKE OTHER MEASURES NECESSARY TO RESTRICT THE TRANSMISSION OF NOISE IN THE IMMEDIATE VICINITY OF THE PROJECT.

FIRE AND SPILL PREVENTION/CONTAINMENT

PRIOR TO THE BEGINNING OF CONSTRUCTION, THE CONTRACTOR SHALL SUBMIT A SPILL PREVENTION/CONTAINMENT PLAN AND A FIRE PREVENTION/CONTAINMENT PLAN TO THE U.S. DEPARTMENT OF AGRICULTURE, FOREST SERVICE (USFS). THE SPILL PREVENTION PLAN SHALL INCLUDE MEASURES TO PREVENT OR CONTROL SPILLS OF FUELS, LUBRICANTS, OR ANY OTHER MATERIALS USED IN CONSTRUCTION FROM ENTERING KENTUCKY LAKE OR ITS TRIBUTARIES.

HERBICIDE USAGE

HERBICIDE USAGE WILL BE MINIMIZED. THE USFS REQUIRES THAT CONTRACTORS USE ONLY THOSE HERBICIDES APPROVED BY THE US EPA FOR USE IN AND AROUND WATER.

CLEARING AND GRUBBING

CLEARING AND GRUBBING WILL BE LIMITED TO THE CONSTRUCTION LIMITS SHOWN ON THE PLANS. PRIOR TO ANY DISTURBANCE, THE ENGINEER AND CONTRACTOR WILL MEET AT THE PROJECT SITE TO DETERMINE WHICH VEGETATION WILL BE REMOVED IN ORDER TO MINIMIZE DISTURBANCE.

DO NOT ALLOW DEBRIS TO ENTER THE WATERS OF KENTUCKY LAKE. DEBRIS THAT DOES ENTER THE WATERS OF KENTUCKY LAKE WILL BE REMOVED IMMEDIATELY.

INVASIVE PLANT SPECIES CONTAINMENT PLAN

THE CONTRACTOR WILL WORK WITH KYTC AND THE USFS TO MINIMIZE OR ELIMINATE THE SPREAD OF INVASIVE AND NOXIOUS WEEDS. BY ITS NATURE EARTH MOVING ACTIVITIES AS WELL AS THE USE OF CONTAMINATED CONSTRUCTION FILL, SEED, AND EROSION-CONTROL PRODUCTS CONTRIBUTE TO THE SPREAD OF WEEDS. UNDER KRS 176.051 THE KENTUCKY TRANSPORTATION CABINET IS INSTRUCTED TO KEEP THE RIGHT-OF-WAY FREE OF:

JOHNSON GRASS
GIANT FOXTAIL
CANADA THISTLES
NODDING THISTLES
MULTIFLORA ROSE
KUDZU
WILD CUCUMBER
BLACK NIGHTSHADE

THREE OF THESE SPECIES JOHNSON GRASS, MULTI-FLORA ROSE AND KUDZU WERE IDENTIFIED WITHIN THE PROJECT AREA DURING THE NEPA PHASE. THERE ARE 28 SPECIES FROM THE FOREST SERVICE REGION 8 EXOTIC/INVASIVE LIST KNOW TO OCCUR WITH LBL, 18 OF WHICH WERE IDENTIFIED ALONG US68/KY80 AS PART OF A USFS CONTRACTED STUDY IN 2004. CONSIDERING THESE AND OTHERS NOT ON THE FS R8 LIST, SPECIES WHICH PROPAGATE PRIMARILY BY SEXUAL MEANS (I.E., SEED DISPERSAL) THAT ARE CONSIDERED A SEVERE OR SERIOUS THREAT TO NATIVE VEGETATION IN DISTURBED AND/OR UNDISTURBED HABITATS INCLUDED TREE-OF-HEAVEN, JAPANESE STILTGRASS, SERICEA LESPEDEZA, EUROPEAN PRIVET, LOBLOLLY PINE, MULTIFLORA ROSE, CROWN VETCH, AUTUMN OLIVE, TALL FESCUE, BUSH HONEYSUCKLE AND JAPANESE HONEYSUCKLE. ADDITIONAL SPECIES WHICH PROPAGATE PRIMARILY THROUGH ASEXUAL MEANS (I.E., ROOT SHOOTS AND RUNNERS) THAT ARE CONSIDERED A SEVERE OR SERIOUS THREAT TO NATIVE VEGETATION IN DISTURBED AND/OR UNDISTURBED HABITATS INCLUDE KUDZU, COMMON PERIWINKLE AND LARGE PERIWINKLE. THESE SPECIES IDENTIFIED AS SERIOUS THREAT WILL BE THE FOCUS OF THE INVASIVE PLANT SPECIES CONTAINMENT PLAN.

GIVEN THE EXTENDED TIMEFRAMES THAT ARE SOMETIMES REQUIRED TO ERADICATE AN INVASIVE SPECIES FROM AN AREA, IT IS NOT FEASIBLE TO ATTEMPT TO REMOVE SUCH SPECIES FROM WITHIN THE CONSTRUCTION LIMITS PRIOR TO CONSTRUCTION. THEREFORE, THE FOLLOWING PLAN HAS BEEN DEVELOPED TO BOTH PREVENT THE INTRODUCTION OF EXOTIC/INVASIVE SPECIES FROM OUTSIDE THE PROJECT AREA AND TO MINIMIZE THE POTENTIAL OF SPREADING EXISTING INFESTATIONS OF EXOTIC/INVASIVE SPECIES ANYWHERE WITHIN THE PROJECT AREA.

PRIOR TO CONSTRUCTION, THE CONTRACTOR WILL:

STAGE THE PROJECT IN SUCH A MANNER AS TO MINIMIZE THE AREA OF DISTURBANCE WITHIN THE PERMANENT EASEMENT, TEMPORARY EASEMENT AND STAGING ZONES AS MUCH AS POSSIBLE.

IDENTIFY, MAP AND FIELD MARK AREAS WITHIN THE DISTURBED LIMITS THAT HAVE NOXIOUS AND INVASIVE WEED POPULATIONS OF CONCERN. THIS EFFORT WILL RELY HEAVILY UPON THE STUDY CONDUCTED BY SOUTHEASTERN BOTANICAL SURVEY FOR USFS IN 2004.

TREAT THE IDENTIFIED AREAS WHERE THE WEED POPULATION EXISTS WITH CHEMICAL APPLICATION, INCINERATION, OR OTHER MEANS TO CONTAIN THE WEED POPULATION. THIS MAY NOT BE PRACTICAL IF THE WEED SEEDS CANNOT BE ERADICATED.

TRAIN THE ON-SITE CONSTRUCTION MANAGERS, CONSTRUCTION WORKERS, AND EQUIPMENT OPERATORS IN THE IDENTIFICATION OF THE WEEDS TO BE AVOIDED

INSPECT THE GRAVEL, ROCK, BORROW MATERIAL AND OTHER SUPPLIES USED IN THE CONSTRUCTION TO MINIMIZE WEEDS

USE ONLY CERTIFIED WEED-FREE STRAW AND MULCH

WASH AND INSPECT ALL EQUIPMENT OUTSIDE OF THE PROJECT SITE FOR WEED SEEDS AND PLANT PARTS PRIOR TO BRINGING THEM ONTO THE PROJECT SITE.

INSTITUTE BEST MANAGEMENT PRACTICES TO PREVENT EROSION AND THE POSSIBILITY OF WEEDY MATERIAL TRANSPORT

DURING CONSTRUCTION THE CONTRACTOR WILL:

MINIMIZE THE DISTURBANCE TO THE GROUND AND AVOID ANY UNNECESSARY REMOVAL OF VEGETATION AS MUCH AS PRACTICAL.

POWER WASH OR USING AN AIR COMPRESSOR, BLOW CLEAN ALL VEHICLES BEFORE THEY LEAVE AREAS IDENTIFIED AS SUPPORTING INVASIVE SPECIES.

GATHER AND PROPERLY DISPOSE OF (I.E. INCINERATE) WEEDS AND WEED SEEDS THAT ARE REMOVED FROM THE VEHICLES

RESTRICT ALL VEHICLES FROM ENTERING THE FLAGGED AREAS THAT ARE NOT NECESSARY FOR THE CONSTRUCTION

SOIL GENERATED FROM CUT MATERIAL THAT MAY CONTAIN EXOTIC/INVASIVE SPECIES ROOT MATERIAL OR SEED WILL NOT BE TRANSPORTED ELSEWHERE WITHIN THE PROJECT AREA FOR USE AS FILL MATERIAL UNLESS IT IS PLACED AT SUFFICIENT DEPTH THAT SEED GERMINATION OR NEW SHOOTS FROM ROOT MATERIAL IS NOT POSSIBLE.

ZEBRA MUSSEL PREVENTION PLAN

THE TENNESSEE RIVER IS KNOWN TO HARBOR POPULATIONS OF THE ZEBRA MUSSEL WITHIN KENTUCKY. ALTHOUGH THE SPECIES IS ESTABLISHED WITHIN KENTUCKY LAKE, EFFORTS TO REDUCE THE POTENTIAL FOR INTRODUCTION OF THE SPECIES LOCALLY WITHIN THE PROJECT AREA ARE RECOMMENDED.

ALL HEAVY EQUIPMENT REQUIRED FOR THE PROJECT THAT HAS BEEN PREVIOUSLY (WITHIN THE LAST TWO WEEKS) USED ELSEWHERE MUST BE THOROUGHLY CLEANED AND MAINTAINED IN A DRY STATE FOR A PERIOD OF AT LEAST TWO WEEKS PRIOR TO MOBILIZATION ONTO THE US-68/KY-80 PROJECT SITE.

TO REDUCE THE RISK OF POTENTIALLY TRANSPORTING ZEBRA MUSSELS WITHIN THE US68/KY80 PROJECT AREA TO OTHER SITES OUTSIDE THE TENNESSEE RIVER, OR UPPER REACHES WHERE THE SPECIES HAS NOT YET BECOME ESTABLISHED, CONSTRUCTION EQUIPMENT WILL BE CLEANED AND MAINTAINED IN A DRY STATE FOR A PERIOD OF AT LEAST TWO WEEKS BOTH DURING CONSTRUCTION AND AT THE CONCLUSION OF CONSTRUCTION PHASE.

WORKING HOUR RESTRICTIONS

CONSTRUCTION ACTIVITIES (EXCLUDING BRIDGE DECK POURING) WILL OCCUR ONLY DURING DAYLIGHT HOURS IN AND NEAR KENTUCKY LAKE DURING THE SEASON OF POTENTIAL

OCCUPATION BY GRAY BATS (APRIL 1 – OCTOBER 31). EXCEPTIONS MUST BE APPROVED BY THE ENGINEER.

SEED MIXTURE FOR PERMANENT SEEDING

CONTRARY TO SECTION 212.03.03, USE THE FOLLOWING SEED MIXTURE, AT A RATE OF 40 POUNDS PER ACRE, FOR PERMANENT SEEDING:

75% - WILDFLOWER MIX CONSISTING OF RYE, LITTLE BLUESTEM, CANADA WILD RYE, SWITCHGRASS, AUTUMN BENTGRASS, PURPLE TOP, LANCE LEAVED COREOPSIS, TICKLEGRASS (ROUGH BENTGRASS), VIRGINIA WILD RYE, TALL WHITE BEARD TONGUE, WILD BERGAMOT
12.5% - HEAVY CONEFLOWER
12.5% - BLACK-EYED SUSAN

MOT RESTRICTIONS

NO LANE CLOSURES WILL BE ALLOWED DURING THE OBSERVANCE OF ALL NATIONAL HOLIDAYS IDENTIFIED IN SECTION 101 OF THE STANDARD SPECIFICATIONS. SPECIAL EVENTS ARE ALSO HELD IN THE LBL AREA AND AT KENLAKE STATE PARK. IT SHALL BE THE CONTRACTOR'S RESPONSIBILITY TO SCHEDULE CONSTRUCTION ACTIVITIES SUCH THAT IMPACTS TO THE EVENTS ARE AVOIDED. A CALENDAR OF EVENTS CAN BE OBTAINED FROM THE USFS AND KENLAKE STATE PARK. KYTC RESERVES THE RIGHT TO RESTRICT THE USE OF LANE CLOSURES DUE TO UNFORESEEN SPECIAL EVENTS.

CONSTRUCTION IN AND NEAR THE WATERS OF KENTUCKY LAKE

DISTURBANCE WITHIN THE WATERS OF KENTUCKY LAKE, INCLUDING THE LAGOON UNDER THE LAGOON BRIDGE, SHALL BE MINIMIZED TO LIMIT THE POTENTIAL IMPACTS TO AQUATIC LIFE.

IN THOSE INSTANCES WHERE WORK WITHIN THE WATERS OF KENTUCKY LAKE IS UNAVOIDABLE, THEN IT SHALL BE PERFORMED IN SUCH A MANNER AND DURATION AS TO MINIMIZE RESUSPENSION OF SEDIMENTS AND DISTURBANCE TO SUBSTRATES AND BANK OR RIPARIAN VEGETATION.

TO THE MAXIMUM EXTENT PRACTICABLE, ALL WORK SHALL BE PERFORMED DURING LOW FLOW CONDITIONS.

ALL EARTHWORK OPERATIONS SHALL BE CARRIED OUT IN SUCH A WAY THAT SEDIMENT RUNOFF AND SOIL EROSION TO KENTUCKY LAKE ARE CONTROLLED AND MINIMIZED.

SPOIL MATERIALS SHALL NOT BE DUMPED INTO KENTUCKY LAKE, AS SPECIFIED UNDER SECTION 404 GUIDELINES OF THE CLEAN WATER ACT.

EQUIPMENT CLEANING/STAGING AREAS WILL BE LOCATED SUCH THAT RUNOFF FROM THESE AREAS WILL NOT DIRECTLY ENTER THE WATER. FILTRATION OF EFFLUENT FROM EQUIPMENT CLEANING/STAGING AREAS WILL BE LOCATED SUCH THAT EFFLUENT WILL BE FILTERED THROUGH VEGETATED AREAS AND/OR PROPER SEDIMENT CONTROL STRUCTURES LOCATED BETWEEN THE STAGING AREA AND THE WATER; THEREFORE, MINIMIZING THE POTENTIAL FOR IMPACTS SUCH AS SEDIMENTATION AND POLLUTION.

MITIGATION OF IMPACTS TO THREATENED/ENDANGERED SPECIES

GRAY BAT

IN ORDER TO MINIMIZE OR NULLIFY THE POTENTIAL *MYOTIS GRISESCENS* IMPACTS, THE KENTUCKY TRANSPORTATION CABINET DOCUMENTS HEREIN, SEVERAL EFFORTS DESIGNED TO MINIMIZE AND MITIGATE.

THE KENTUCKY TRANSPORTATION CABINET DESIGN EXECUTIVE SUMMARY (LANHAM 2005) CONTAINED WITHIN THE PRELIMINARY DRAINAGE DESIGN ADVANCE FOLDER (PALMER ENGINEERING COMPANY 2010) SHOWS THE FOLLOWING REGARDING MINIMIZATION AND MITIGATION ISSUES RELATED TO THE WATER RESOURCES, WHICH WOULD ALSO BE OF VALUE FOR NEGATING IMPACTS TO POTENTIAL FORAGING AREAS BY *M. GRISESCENS*:

AVOIDANCE ALTERNATIVES FOR WATER RELATED IMPACTS

THE PROPOSED ROADWAY CROSSES THE KENTUCKY LAKE, LAKE BARKLEY, AND A NUMBER OF SMALL STREAMS. AVOIDANCE OF THESE CROSSINGS IS NOT POSSIBLE, AS THE MAIN OBJECTIVE OF THE PROJECT IS TO REPLACE THE EXISTING, STRUCTURALLY DEFICIENT BRIDGES AND RESTRUCTURE THE ALIGNMENT. THE BRIDGE SPANS WILL BE ARRANGED SO AS TO KEEP THE MAIN CHANNELS OPEN AND UNOBSTRUCTED TO FLOW. THE ABUTMENTS MAY BE SKEWED SLIGHTLY TO THE FLOW DIRECTION, BUT PERPENDICULAR TO THE ROADWAY, TO MIMIC THE CURRENT FOOTPRINT OF THE EXISTING BRIDGE. THE USE OF RIP RAP WILL BE LIMITED TO THE CHANNEL BANKS, AND USED ONLY IN THE IMMEDIATE VICINITY OF THE STRUCTURE. ALL IN-LAKE CONSTRUCTION WILL CONTAIN EROSION PREVENTION AND SEDIMENTATION CONTROL (EPSC) MEASURES TO INCLUDE BUT NOT BE LIMITED TO:

ALL WATER LEAVING THE CONSTRUCTION SITE VIA DITCH OR SHEET FLOW WILL BE CONTROLLED BY SEDIMENT TRAPS OR SILT FENCE TO LIMIT SEDIMENT THAT MIGHT REACH THE STREAMS. EROSION CONTROL PLANS WILL BE DEVELOPED AND INCLUDED WITH THE PLAN SET. THESE PLANS WILL BE UPDATED BY THE CONTRACTOR AS CONSTRUCTION PROCEEDS. ALL EROSION AND SEDIMENT DEVICES WILL BE SIZED TO PROPERLY PREVENT OR RETAIN SEDIMENT FROM LEAVING THE PROJECT SITE.

ADDITIONAL MITIGATION AND MINIMIZATION PROCEDURES WILL BE:

1) IN AREAS NOT TREATED WITH RIP-RAP OR OTHERWISE STABILIZED, RE-VEGETATION OF STREAM BANK AND RIPARIAN ZONES SHALL OCCUR CONCURRENTLY WITH THE PROJECT PROGRESSION. SPECIES OF GRASSES, SHRUBS, AND TREES THAT ARE INDIGENOUS TO THE AREA OR THOSE RECOMMENDED BY THE DIVISION OF ENVIRONMENTAL ANALYSIS BIOLOGIST FOR DISTRICT 1, COMMONWEALTH OF KENTUCKY TRANSPORTATION CABINET, SHOULD BE PLANTED.

2) TO THE MAXIMUM EXTENT PRACTICABLE, ALL WORK SHALL BE PERFORMED DURING LOW FLOW CONDITIONS.

3) THE FILL CREATED BY DISCHARGE AND/OR DEPOSITION OF ANY DREDGED OR EXCAVATED MATERIALS ONSHORE, AND ALL EARTHWORK OPERATIONS, SHALL BE CARRIED OUT IN SUCH A WAY THAT SEDIMENT RUNOFF AND SOIL EROSION TO THE WATERCOURSE ARE CONTROLLED AND MINIMIZED. BEST MANAGEMENT PRACTICES FOR WATER POLLUTION CONTROL SHALL BE INCORPORATED INTO PROJECT DESIGN PLANS ACCORDING TO SECTION
213.03.01 OF THE KENTUCKY STANDARD SPECIFICATIONS FOR ROAD AND BRIDGE CONSTRUCTION, CURRENT EDITION.

4) HEAVY EQUIPMENT (BULLDOZERS, CRANES, BACKHOES, DRAG LINES, ETC.), IF REQUIRED FOR THIS PROJECT, SHOULD NOT BE USED OR OPERATED WITHIN THE STREAM CHANNEL. IN THOSE INSTANCES WHERE SUCH IN-STREAM WORK IS UNAVOIDABLE, THEN IT SHALL BE PERFORMED IN SUCH A MANNER AND DURATION AS TO MINIMIZE RE-SUSPENSION OF SEDIMENTS AND DISTURBANCE TO SUBSTRATES AND BANK OR RIPARIAN VEGETATION.

5) SPOIL MATERIALS FROM THE WATERCOURSE OF ON-SHORE OPERATIONS, INCLUDING SLUDGE DEPOSITS, SHALL NOT BE DUMPED INTO WATERCOURSES AS SPECIFIED UNDER SECTION 404 GUIDELINES OF THE CLEAN WATER ACT. DURING THE DREDGING OF APPROXIMATELY 100,000 CUBIC YARDS OF MATERIAL FROM THE KENTUCKY LAKE BOTTOM, A TURBIDITY CURTAIN OR SIMILAR MEASURE WILL BE USED TO REDUCE SILTATION. AREA FOR DEPOSIT OF DREDGED MATERIALS SHALL BE PROVIDED WITH TEMPORARY DIKES OR BULKHEADS FOR SEPARATION AND RETENTION OF SETTLEABLE SOLIDS. DREDGE SPOIL WILL BE DEPOSITED IN A LOCATION THAT IS TO BE APPROVED BY THE TENNESSEE VALLEY AUTHORITY, U.S. ARMY CORPS OF ENGINEERS, AND KENTUCKY DIVISION OF WATER PRIOR TO DEPOSITION.

6) MEASURES SHALL BE TAKEN TO PREVENT OR CONTROL SPILLS OF FUELS, LUBRICANTS, OR ANY OTHER MATERIALS USED IN CONSTRUCTION FROM ENTERING THE WATERCOURSE.

7) ANY FILL OR RIP-RAP SHALL BE OF SUCH COMPOSITION THAT IT WILL NOT ADVERSELY AFFECT THE BIOLOGICAL, CHEMICAL, OR PHYSICAL PROPERTIES OF THE RECEIVING WATERS AND/OR CAUSE VIOLATION VOLUME 1 OF 1 PAGE 11 OF 119 OF WATER QUALITY STANDARDS. IF RIP-RAP IS UTILIZED, IT IS TO BE OF SUCH SIZE AND WEIGHT THAT BANK STRESS OR SLUMP CONDITIONS WILL NOT BE CREATED BECAUSE OF ITS PLACEMENT, AS SPECIFIED IN SECTION 703 OF THE KENTUCKY STANDARD SPECIFICATIONS FOR ROAD AND BRIDGE CONSTRUCTION, CURRENT EDITION.

ADDITIONALLY, THE CONTRACTOR SHALL ADHERE TO THE FOLLOWING MEASURES SPECIFICALLY AIMED AT THE USE OF HABITAT BY BATS:

* SEASONAL RESTRICTIONS PLACED UPON THE DECONSTRUCTION OF THE OLD BRIDGES ONCE THE NEW BRIDGES ARE OPERATIONAL. CONTRACTOR WILL DECONSTRUCT THE EXISTING BRIDGE DURING THE PERIOD OF TIME WHEN BATS AND OSPREY ARE NOT PRESENT (NOVEMBER 1-FEBRUARY 28).
* CONSTRUCTION ACTIVITIES (EXCLUDING BRIDGE DECK POURING) WILL OCCUR ONLY DURING DAYLIGHT HOURS IN AND NEAR THE STREAM DURING THE SEASON OF POTENTIAL OCCUPATION BY BATS (APRIL 1 OCTOBER 31). BECAUSE OF INCREASED HEAT AND HUMIDITY

EXPERIENCED DURING THE SUMMER MONTHS, DECK POURING MAY NEED TO OCCUR DURING TIMES WHEN *M. GRISESCENS* ACTIVELY FORAGE. POURING OF CONCRETE DURING NIGHT-TIME HOURS ALLOWS FOR PROPER CURATION TO INCREASE STRUCTURAL INTEGRITY AND LONG-TERM SUSTAINABILITY OF THE BRIDGE DECK. THE KENTUCKY TRANSPORTATION CABINET FEELS THAT DECK-POURING ACTIVITIES OCCURRING AT NIGHT WILL NOT ALTER THE BEHAVIORAL PATTERNS OF *M. GRISESCENS* POTENTIALLY FORAGING OVER THE LARGE LAKES AND STREAM NETWORKS DURING THESE PERIODS.

* TO REDUCE EROSION AND SEDIMENTATION EFFECTS OF HIGHWAY CONSTRUCTION PROJECTS, CONTRACTOR IS BOUND BY THE TENETS OF KPDES PERMIT NO. KYR10 FOR ALL CONSTRUCTION PROJECTS INVOLVING SOIL DISTURBANCE. FOR THE SUBJECT PROJECT, A SITE SPECIFIC EROSION CONTROL PLAN (ECP), HAS BEEN DEVELOPED IN ORDER TO OUTLINE POTENTIAL WATER QUALITY ISSUES BY DETERMINING INDIVIDUAL DISTURBED DRAINAGE AREAS (DDA) WHERE CONSTRUCTION SITE EFFLUENT WILL BE DISCHARGED OFF-SITE OR INTO WATERS OF THE COMMONWEALTH (SEE APPENDIX C). WITHIN THE ECP, SEDIMENT CONTROL STRUCTURES HAVE BEEN MARKED AT EACH DDA DISCHARGE POINT. THESE STRUCTURES ARE SUGGESTIONS BASED ON ENGINEERING PRACTICES DEVELOPED BY THE DESIGN ENGINEER.

* ACCORDING TO SECTION 213.03.01 OF THE KENTUCKY TRANSPORTATION CABINET STANDARD SPECIFICATIONS, A BEST MANAGEMENT PRACTICES (BMP) PLAN (IN ACCORDANCE WITH KPDES PERMIT NO. KYR10) WILL BE DEVELOPED JOINTLY BY THE RESIDENT ENGINEER AND THE CONTRACTOR PRIOR TO THE PRECONSTRUCTION CONFERENCE. THE BMP PLAN WILL BE DEVELOPED UTILIZING INFORMATION CONTAINED WITHIN THE ECP. THROUGH PROGRESSION OF THE PROJECT, THE BMP PLAN WILL BE UPDATED IN ORDER TO ADDRESS THE EVER-CHANGING ON-SITE CONDITIONS TO ASSURE THE OVERALL GOAL OF EROSION CONTROL AND SEDIMENT CONTAINMENT. THE BMP PLAN SHALL BE MODIFIED WHEN THERE IS A CHANGE IN DESIGN, CONSTRUCTION, OPERATION OR MAINTENANCE OF THE SITE WHICH HAS A SIGNIFICANT EFFECT ON THE POTENTIAL FOR THE DISCHARGE OF POLLUTANTS TO WATERS OF THE COMMONWEALTH. THE BMP SHALL ALSO BE AMENDED IF ANY ASPECT (DURING INSPECTIONS CONDUCTED BY THE RESIDENT ENGINEER AND CONTRACTOR SIMULTANEOUSLY EVERY 7 DAYS OR AFTER RAIN EVENTS GREATER THAN 0.5") IS DETERMINED TO BE INEFFECTIVE IN CONTROLLING THE DISCHARGE OF POLLUTANTS TO WATERS OF THE COMMONWEALTH. ANY CHANGES IN THE BMP PLAN SHALL BE IMPLEMENTED WITHIN 7 DAYS OF THE MONITORING OR ACTION EVENT. APPROPRIATE DOCUMENTATION OF CHANGES IN THE BMP PLAN WILL BE MAINTAINED THROUGHOUT THE DURATION OF THE PROJECT. FURTHER, APPROPRIATE DOCUMENTATION (PICTURES, MONITORING LOG, ETC.) OF INSPECTIONS WILL BE MAINTAINED ON THE CONSTRUCTION SITE.

* IT IS EXPECTED THAT IMPACTS TO THE RIPARIAN CORRIDOR WILL BE NEGLIGIBLE-TO-NONEXISTENT AS THE VAST MAJORITY WORK WILL BE PERFORMED ON THE EXISTING ROADBED. PRIOR TO ANY DISTURBANCE OF VEGETATION (IF ANY) WILL BE REMOVED IN ORDER TO MINIMIZE RIPARIAN DISTURBANCE. ALL AREAS WILL BE REPLANTED WITH NATIVE SPECIES AS NECESSARY. PLANTING LISTS WILL BE DEVELOPED FOR CONSTRUCTION PERSONNEL BY THE DEC AND THE KYTC BIOLOGIST.

* A PREMIUM WILL BE PLACED ON KEEPING DEBRIS ATTRIBUTED TO PHASE I AND II REMOVAL OUT OF THE WATER. DEBRIS THAT DOES ENTER THE STREAM WILL BE REMOVED IMMEDIATELY. DUE TO ON-SITE RESTRAINTS, EQUIPMENT WILL BE USED ON THE BARGES, BANKS, AND IF NECESSARY VIA A PAD AT THE EDGE OF THE WATER.

* PLACING OF CONCRETE FOR PIERS AND/OR DECKING WILL BE DONE SUCH THAT SPILLS INTO THE STREAM DO NOT OCCUR. IN THE UNFORESEEN EVENT THAT SPILLAGE DOES OCCUR, THE FRANKFORT USFWS OFFICE WILL BE NOTIFIED AND THE RESIDENT ENGINEER SHALL HALT

THE ACTIVITY IMMEDIATELY AND NOT RESUME UNTIL APPROPRIATE REMEDIAL ACTIONS HAVE BEEN IMPLEMENTED.

* EQUIPMENT CLEANING/STAGING AREAS WILL BE LOCATED SUCH THAT RUNOFF FROM THESE AREAS WILL NOT DIRECTLY ENTER THE WATER. FILTRATION OF EFFLUENT FROM EQUIPMENT CLEANING/STAGING AREAS WILL BE LOCATED SUCH THAT EFFLUENT WILL BE FILTERED THROUGH VEGETATED AREAS AND/OR PROPER SEDIMENT CONTROL STRUCTURES LOCATED BETWEEN THE STAGING AREA AND THE WATER; THEREFORE, MINIMIZING THE POTENTIAL FOR IMPACTS SUCH AS SEDIMENTATION AND POLLUTION.

* THE PROPOSED BRIDGES HAVE BEEN DESIGNED TO REDUCE IMPACTS TO THE WATER BY MINIMIZING THE NUMBER OF NEW PIERS IN THE LAKES. ALL OF THE EXISTING PIERS WILL BE REMOVED.

* DURING FOOTER/PIER CONSTRUCTION, COFFER DAMS, SEDIMENT CURTAINS, AND/OR SANDBAGS AND PUMPS MAY BE UTILIZED IN ORDER TO BE ABLE TO PLACE CONCRETE IN THE FOOTERS. IF SO, WATER REMOVED FROM INSIDE THE COFFER DAMS OR SANDBAGGED AREAS WILL BE FILTERED USING AN APPROVED SEDIMENT FILTRATION METHOD PRIOR TO RELEASE INTO THE WATER.

* USFWS AND THE KYTC BIOLOGIST SHALL BE CONTACTED BY THE KYTC DISTRICT 1 ENVIRONMENTAL COORDINATOR AT LEAST ONE WEEK PRIOR TO THE START OF CONSTRUCTION FOR THE PROPOSED PROJECT.

ARCHAELOGICAL MATERIALS

IF ARCHAELOGICAL MATERIALS ARE UNCOVERED DURING CONSTRUCTION, ALL CONSTRUCTION WORK IN THE AREA OF THE FIND(S) WOULD CEASE. THE KHC AND SHPO OFFICE WOULD BE CONTACTED IMMEDIATELY SO THAT REPRESENTATIVES OF THAT OFFICE MAY HAVE THE OPPORTUNITY TO EXAMINE AND EVALUATE THE MATERIALS. IF HUMAN REMAINS ARE DISCOVERED DURING CONSTRUCTION, ALL ACTIVITY IN THE VICINITY OF THE REMAINS WOULD CEASE IMMEDIATELY, AND THE STATE MEDICAL EXAMINER AND THE APPROPRIATE LOCAL LAW ENFORCEMENT AGENCY WOULD BE CONTACTED. IF MATERIALS ARE DISCOVERED ON ANY FEDERALLY OWNED PROPERTY, THEN REPRESENTATIVES OF THE ADMINISTERING AGENCY ALSO WOULD BE CONTACTED.

MITIGATION OF IMPACTS TO THREATHENED/ENDANGERED SPECIES-OSPREY

IN ADDITION TO OTHER REQUIRED MITIGATION, THE CONTRACTOR SHALL BE RESPONSIBLE FOR THE REMOVAL OF ALL OSPREY NESTS CURRENTLY ON THE EGGNER'S FERRY BRIDGE AND THE SUBSEQUENT REMOVAL OF ANY NEW NESTS BEING BUILT WHILE THE NEW KENTUCKY LAKE BRIDGE IS UNDER CONSTRUCTION. THE CURRENTLY EXISTING NESTS MUST BE REMOVED BEFORE FEBRUARY 1, 2014, AND ANY SUBSEQUENT NESTS BEING BUILT WOULD NEED TO BE REMOVED BEFORE ANY EGGS ARE LAID. ONCE EGGS OR YOUNG BIRDS ARE IN A NEST, THEY MUST **NOT** BE DISTURBED. IT SHOULD BE NOTED THAT OSPREY COULD NEST ANYWHERE ON THE STRUCTURE, AT THE HIGHEST POINT OF THE SUPERSTRUCTURE OR ON THE ABUTMENTS ETC. THE KYTC DISTRICT ONE ENVIRONMENTAL COORDINATOR SHALL BE NOTIFIED TWENTY FOUR HOURS IN ADVANCE OF ANY REMOVAL OF A NEST SO THAT THE STATUS OF THE NEST CAN BE VERIFIED AND THE SUBSEQUENT REMOVAL DOCUMENTED. PRIOR TO BEGINNING ANY CONSTRUCTION ACTIVITY ON SITE, THE CONTRACTOR SHALL MEET WITH THE KYTC DISTRICT ONE COORDINATOR FOR ASSISTANCE WITH IDENTIFYING OSPREY NESTS ETC., AND TO DETERMINE IF THERE ARE ANY NESTS ON THE STRUCUCTURE THAT NEED TO BE REMOVED

IMMEDIALTELY. THIS MITIGATION REQUIREMENT IS INTENDED TO MINIMIZE THE POSSIBILITY OF ANY POTENTIAL DELAYS TO THE PROJECT SCHEDULE. ALL COSTS ASSOCIATED WITH CARRYING OUT THIS MITIGATION REQUIREMENT SHALL BE BORNE BY THE CONTRACTOR AND ARE INCIDENTAL TO THE PROJECT.

10-14-2013

Communicating All Promises

New Bridge and Approaches Carrying US 68 and KY 80 over Kentucky Lake
Marshall/Trigg Counties
Item No 1-180.70

NOISE

1. DESCRIPTION: Landscape screening plan to be developed by KYTC during design. The plan is subject to final approval by the USFS prior to KYTC approval of a final Landscape Plan design. (A-35, A-36, A-41)*. (Fenton Campground)

    - SOURCE: FONSI – US68/KY80 Item No. 1-180.00 + KYTC Letter to USFS on 10-15-2007
    - DATE: September 2006
    - RESOLUTION: Not applicable to this construction project

2. DESCRIPTION: Landscape screening to minimize noise and visual impacts will be considered for the Golden Pond Picnic Area. The KYTC will work with the USFS during final design to incorporate landscape screening as appropriate.

    - SOURCE: FONSI – US68/KY80 Item No. 1-180.00
    - DATE: September 2006
    - RESOLUTION: Not applicable to this construction project

3. DESCRIPTION: The construction contractor will be required to provide equipment (sound-deadening devices, shields, physical barriers) and take measures necessary to restrict the transmission of noise to noise sensitive sites (such as residences and campgrounds) in the immediate vicinity of the project. (3-2 through 3-10)*

    - SOURCE: FONSI – US68/KY80 Item No. 1-180.00
    - DATE: September 2006
    - RESOLUTION: Special Note added to Roadway Plans

WATER RESOURCES

LAKE CROSSINGS

4. DESCRIPTION: During final design, the use of a shore-to-shore bridge rather than a causeway-bridge combination will be considered for the Kentucky Lake and Lake Barkley bridges. (3-10, 3-11, 5-2)*

    - SOURCE: FONSI – US68/KY80 Item No. 1-180.00
    - DATE: September 2006
    - RESOLUTION: Studied and resolved in Phase 1 Design

5. DESCRIPTION: Bridge demolition and construction activities that would cause sedimentation concerns should be conducted in the cool months of November to April in order to minimize the silt load impacts on reproduction, respiration, and feeding when biological activity is high during warm months. (5-2)*

    - SOURCE: FONSI – US68/KY80 Item No. 1-180.00
    - DATE: September 2006
    - RESOLUTION: Special Note added to Roadway Plans

6. DESCRIPTION: US Coast Guard Bridge Permits for the new Eggner's Ferry and Lawrence Memorial Bridges are required. Under the authority of Section 9 of the Rivers and Harbors Act of 1899 and the General Bridge Act of 1946, as well as other acts, the Coast Guard is responsible for approving location and plans for bridges and causeways over navigable waters. (3-73)*

    - SOURCE: FONSI – US68/KY80 Item No. 1-180.00
    - DATE: September 2006
    - RESOLUTION: Permit obtained. See construction contract documents

7. DESCRIPTION: Agents, acting on behalf of KYTC, shall obtain all permits necessary to construct the project. A copy of all permits will be provided to USFS prior to commencement of any ground disturbance in the jurisdictional areas of the permit. (3-12 to 3-25, 3-73, A-38, A-43)*

    - SOURCE: FONSI – US68/KY80 Item No. 1-180.00
    - DATE: September 2006
    - RESOLUTION: All permits obtained and distributed

8. DESCRIPTION: TVA will need to approve a land transfer, grant-of-easement, or other form of legal instrument to provide KYTC with the necessary land rights to place additional fill for the causeway/piers for the new bridge. Prior to consideration of issuance of the needed Section 26a permit and land use authorization, TVA will need to review detailed plans for replacement of Eggner's Ferry Bridge over Kentucky Reservoir. (Per Dec. 29, 2005 letter to KYTC)*

    - SOURCE: FONSI – US68/KY80 Item No. 1-180.00 + TVA letter to KYTC on 12-29-2005
    - DATE: September 2006
    - RESOLUTION: Task completed with Section 26a permit application process

9. DESCRIPTION: Land Grant Easements between USFS and KYTC will be required for the Land Between the Lakes property prior to construction.

    - SOURCE: FONSI – US68/KY80 Item No. 1-180.00
    - DATE: September 2006
    - RESOLUTION: Completed in preceding LBL Design-Build Project

STREAMS

10. DESCRIPTION: In-channel work will be restricted to periods of low flow and will be limited to placement of piers, pilings, and /or footings, shaping of the spill slopes around the bridge abutments, and placement of riprap. Construction techniques that would cause a minimum amount of damage to the bottom of water bodies will be used throughout construction. (3-11, 3-12, 3-13, 5-2)*

    - SOURCE: FONSI – US68/KY80 Item No. 1-180.00
    - DATE: September 2006
    - RESOLUTION: Special Note added to Roadway Plans

11. DESCRIPTION: Banks will be constructed similar to pre-disturbance slopes and elevations and stabilized with natural vegetation. Shorelines will be stabilized with native woody plants, including trees, where practicable and sustainable. Retaining walls in general locations may be needed to minimize impacts (3-13, 5-2)*

    - SOURCE: FONSI – US68/KY80 Item No. 1-180.00
    - DATE: September 2006
    - RESOLUTION: Included in Phase II Design - See Plans

12. DESCRIPTION: Natural channel design concepts, including bioengineering, will be used where appropriate for stream channel work especially where existing roads are being abandoned and pavement and culverts are being removed. (5-2)*

- SOURCE: FONSI – US68/KY80 Item No. 1-180.00
- DATE: September 2006
- RESOLUTION: Not applicable this construction project

13. DESCRIPTION: Erosion control measures specified in Section 3.21.10 will be implemented. The KYTC will coordinate with the US Fish and Wildlife Service; Kentucky Department of Environmental Protection; and the US Army Corps of Engineers during the design of channel relocations. (3-13, 5-2)*

    - SOURCE: FONSI – US68/KY80 Item No. 1-180.00
    - DATE: September 2006
    - RESOLUTION: Included in Phase II Design – See Plans

14. DESCRIPTION: Stream mitigation through the use of oversized culverts, natural bottoms, and minimization of construction disturbance limits near the riparian buffer has been included in the plans for the project.

    - SOURCE: FONSI-US68/KY80 Item No. 1-180.00+ KYTC letter to USFS on 10-15-2007
    - DATE: September 2006
    - RESOLUTION: Special Note added to Roadway Plans

15. DESCRIPTION: US Army Corps of Engineers Dredge and Fill Permit for new embankment in Kentucky Lake and Lake Barkley. Section 404 of the Clean Water Act, and a 401 Water Quality Certification from Commonwealth of Kentucky (as mandated under Section 401 of the Clean Water Act). A copy of all permits will be provided to the USFS. (3-12 to 3-25, 3-73, A-38, A-43)*

    - SOURCE: FONSI – US68/KY80 Item No. 1-180.00
    - DATE: September 2006
    - RESOLUTION: All permits obtained. See construction contract documents.

WATER QUALITY

16. DESCRIPTION: Roadside Drainage - Where appropriate, roadside ditches that are grass-lined and connected to filter strips and containment basins will be constructed. (5-3)*

    - SOURCE: FONSI – US68/KY80 Item No. 1-180.00
    - DATE: September 2006
    - RESOLUTION: Included in Phase II Design – See Plans

17. DESCRIPTION: Erosion and Sedimentation Control - Permanent and temporary erosion control devices will be used to minimize sediment and debris. Strict controls will be employed during construction near streams to reduce turbidity. Timely revegetation after soil disturbance will be implemented and monitored. Revegetation will consider site specific needs for hydrology. (3-13, 5-3)*

    - SOURCE: FONSI – US68/KY80 Item No. 1-180.00
    - DATE: September 2006
    - RESOLUTION: Special Note added to Roadway Plans

18. DESCRIPTION: Spill Prevention/Containment - The USFS will require contractors to have a spill plan and a fire plan prior to the beginning of work in the LBL. (5-3)*

    - SOURCE: FONSI – US68/KY80 Item No. 1-180.00
    - DATE: September 2006
    - RESOLUTION: Special Note added to Roadway Plans

19. DESCRIPTION: US Army Corps of Engineers Dredge and Fill Permit for new embankment in Kentucky Lake and Lake Barkley Section 404 of the Clean Water Act, and a 401 Water Quality Certification from Commonwealth of Kentucky (as mandated under Section 401 of the Clean Water Act). (3-73, 5-4)*

    - SOURCE: FONSI – US68/KY80 Item No. 1-180.00
    - DATE: September 2006
    - RESOLUTION: Permits obtained. See construction contract documents.

20. DESCRIPTION: An approval under Section 26a of the TVA is required for new Eggner's Ferry Bridge. (3-73, 5-4)*

    - SOURCE: FONSI – US68/KY80 Item No. 1-180.00
    - DATE: September 2006
    - RESOLUTION: Permit obtained. See construction contract documents.

21. DESCRIPTION: Agents acting on behalf of KYTC shall obtain all permits necessary to construct the project. A copy of all permits will be provided to USFS prior to commencement of any ground disturbance in the jurisdictional areas of the permit. (3-12 to 3-25, 3-73, A-38, A-43)*

    - SOURCE: FONSI – US68/KY80 Item No. 1-180.00
    - DATE: September 2006
    - RESOLUTION: All permits obtained and distributed

22. DESCRIPTION: Herbicide Use Plan - Herbicide usage will be minimized in environmentally sensitive areas, such as near streams. The USFS will require contractors to use only those herbicides approved by the US EPA for use in and around water. (5-3)*

    - SOURCE: FONSI – US68/KY80 Item No. 1-180.00
    - DATE: September 2006
    - RESOLUTION: Special Note added to Roadway Plans

23. DESCRIPTION: Low Salt and No Spray Zones - A low salt and no spray strategy will be developed in stream areas for this project. A signing strategy for these items will also be developed, to help maintenance forces who will be maintaining roadway after construction. (5-3)*

    - SOURCE: FONSI – US68/KY80 Item No. 1-180.00
    - DATE: September 2006
    - RESOLUTION: Not applicable to this construction project. Future responsibility of KYTC District 1 Maintenance Department

24. DESCRIPTION: Parking and Turning Areas - Parking and turning areas for heavy equipment will be confined to sites that will minimize soil erosion and tree clearing, and will avoid environmentally sensitive areas. (5-3)*

    - SOURCE: FONSI – US68/KY80 Item No. 1-180.00
    - DATE: September 2006
    - RESOLUTION: Included in Phase II Design – See Plans

HYDROLOGY

25. DESCRIPTION: Appropriate culverts and other drainage structures will be used to maintain current hydrologic flows. The number of culverts and their placement will be determined in final design. (5.2)*

    - SOURCE: FONSI – US68/KY80 Item No. 1-180.00
    - DATE: September 2006
    - RESOLUTION: Included in Phase II Design – See Plans

26. DESCRIPTION: Modeling during final design will ensure that increased backwater levels will be less than what is required for the applicable permits. (5-4)*

    - SOURCE: FONSI – US68/KY80 Item No. 1-180.00
    - DATE: September 2006
    - RESOLUTION: Included with Phase II Design – See Plans

WETLANDS

27. DESCRIPTION: Hydrology of existing wetlands may only be altered by improving the hydrology. (3-13, 5-3)*

    - SOURCE: FONSI – US68/KY80 Item No. 1-180.00
    - DATE: September 2006
    - RESOLUTION: Included with Phase II Design – See Plans

28. DESCRIPTION: USACE Section 404 Permitting and Section 401 Water Quality Certification are required. Since the project is also within the jurisdictional limits of the TVA, approval via Section 26a permitting is required. (3-12, to 3-25, 3-73, A-38, A-43, 5-4)*

    - SOURCE: FONSI – US68/KY80 Item No. 1-180.00
    - DATE: September 2006
    - RESOLUTION: All permits obtained. See construction contract documents.

29. DESCRIPTION: Salt and other possible pollutants from highway runoff will be diverted away from nearby wetlands by using roadside ditches. Current water regimes will be maintained along with no ditching in wetland areas. Erosion Control will be implemented. (3-12 to 3-25, 5-4)*

    - SOURCE: FONSI – US68/KY80 Item No. 1-180.00
    - DATE: September 2006
    - RESOLUTION: Included with Phase II Design – See Plans

30. DESCRIPTION: Within LBL, wetland mitigation is to be handled via the payment of in-lieu fees by agents acting on behalf of KYTC to Kentucky Department of Fish and Wildlife. KY Department of Fish and Wildlife has agreed to use said fee to perform wetland mitigation within the confines of LBL at locations to be approved by USFS. (3- 12, to 3-25, 3-73 & per October 15, 2007 letter to USFS by KYTC)*

    - SOURCE: FONSI – US68/KY80 Item No. 1-180.00
    - DATE: September 2006
    - RESOLUTION: Not applicable to this construction project

31. DESCRIPTION: US Army Corps of Engineers Permit and TVA 26a permit for fill within jurisdictional wetlands, including the associated water quality certification is needed. Section 404 and 401 of Clean Water Act. (3-12 to 3-25, 3-73, A-38, A-43)*

    - SOURCE: FONSI – US68/KY80 Item No. 1-180.00
    - DATE: September 2006
    - RESOLUTION: All permits obtained. See construction contract documents.

FLOODPLAINS

32. DESCRIPTION: Modeling during final design will ensure that any increases in backwater levels will be less than that permitted by federal law and local ordinances. Additional culvert improvements will be made during final design, if necessary, based on a hydraulic capacity analysis. (3-20, 3-21, 5-4)*

    - SOURCE: FONSI – US68/KY80 Item No. 1-180.00

- DATE: September 2006
- RESOLUTION: Included in Phase II Design – See Plans

33. DESCRIPTION: The TVA requires that fills of more than one acre-foot in Kentucky Lake be offset by an equal cut or other method to achieve "no net loss" in flooding storage capacity. If causeways are used, opportunities to create additional storage volume areas in KL and LB by creating wetlands and/or ponds will be considered to compensate for flooding and power capacity losses, as necessary. (3-20,3-21, 5-4)*

    - SOURCE: FONSI – US68/KY80 Item No. 1-180.00
    - DATE: September 2006
    - RESOLUTION: Requirement resolved during Section 26A Permit application process

34. DESCRIPTION: The US Army Corps of Engineers mandates that there will be "No Net Loss" for storage capacity in KL or LB. Per conversations with USACE Regulatory.

    - SOURCE: FONSI – US68/KY80 Item No. 1-180.00
    - DATE: September 2006
    - RESOLUTION: Requirement resolved during Section 404 Permit application process

34a. DESCRIPTION: Where culverts penetrate the existing embankment, they would be lengthened so that the existing drainage function would be preserved. Therefore, there would be no additional flooding upstream of existing berm. Additional culvert improvements would be made during final design, if necessary, based on a hydraulic capacity analysis. (3-21)*

    - SOURCE: FONSI – US68/KY80 Item No. 1-180.00
    - DATE: September 2006
    - RESOLUTION: Included in Phase II Design – See Plans

WILDLIFE and HABITAT

35. DESCRIPTION: To help minimize the loss of habitat, final geotechnical information will be used to determine if side-slopes could be made steeper, thus reducing the area of right- of-way. (5-4)*

    - SOURCE: FONSI – US68/KY80 Item No. 1-180.00
    - DATE: September 2006
    - RESOLUTION: Included in Phase II Design – See Plans

36. DESCRIPTION: Disturbed areas will be re-vegetated with grasses, woody vegetation and/or wildflowers, as specified in the vegetation/landscape plan that will be developed by the KYTC with assistance from the USFS during the final design. KYTC would work with KY Commerce Cabinet Department of Parks staff on the details of the plan for the portion of the project in Kenlake State Park. (3-81, 5-4, 5-5)*

    - SOURCE: FONSI – US68/KY80 Item No. 1-180.00
    - DATE: September 2006
    - RESOLUTION: Included in Phase II Design – See Plans

37. DESCRIPTION: To minimize potential affects upon the fish life in general in Kentucky Lake and Lake Barkley, bridge construction activities should be minimized during the spawning season (March thru June). (3-81, 5-5)*

    - SOURCE: FONSI – US68/KY80 Item No. 1-180.00
    - DATE: September 2006
    - RESOLUTION: Special Note added to Roadway Plans

38. DESCRIPTION: Considerations would be given to moving existing osprey nests and nesting platforms in close proximity to the bridge prior to construction as well as building additional osprey nesting platforms at suitable locations in Lake Barkley and Kentucky Lake (per phone conversation with Blake Beyer) away from the bridge. Any moving of nests or platforms would be done during the non-nesting season (August - March). (3-33, 3-81, 5-5)*

    - SOURCE: FONSI – US68/KY80 Item No. 1-180.00
    - DATE: September 2006
    - RESOLUTION: Completed by KYTC prior to this construction project

39. DESCRIPTION: Limiting bridge construction operations below water to the cool months of November to April would reduce overall impacts to aquatic organisms. (3-81)*

    - SOURCE: FONSI – US68/KY80 Item No. 1-180.00
    - DATE: September 2006
    - RESOLUTION: Special Note added to Roadway Plans

40. DESCRIPTION: In-channel work would be restricted to periods of low flow (typically late summer through fall). (3-81)*

    - SOURCE: FONSI – US68/KY80 Item No. 1-180.00
    - DATE: September 2006
    - RESOLUTION: Special Note added to Roadway Plans

41. DESCRIPTION: Disturbance would only take place within the project disturbance limits. (3-81)*

    - SOURCE: FONSI – US68/KY80 Item No. 1-180.00
    - DATE: September 2006
    - RESOLUTION: Special Note added to Roadway Plans

42. DESCRIPTION: Construction near streams would be restricted to normal daytime hours in the summer (May 15-August 15). (3-80)*

    - SOURCE: FONSI – US68/KY80 Item No. 1-180.00
    - DATE: September 2006
    - RESOLUTION: Special Note added to Roadway Plans
    -

43. DESCRIPTION: Special project working hours have been established to minimize impacts to wildlife as per the direction of USFWS. (3-81)*

    - SOURCE: FONSI – US68/KY80 Item No. 1-180.00
    - DATE: September 2006
    - RESOLUTION: Special Note added to Roadway Plans

SIGNAGE

44. DESCRIPTION: Special wildlife warning signs will be included in the project's final sign plan. Deer crossing signs will be placed throughout the project area to warn motorists of potential collisions. Consideration will be given to signs that have attention features such as flashing lights at dawn and dusk. Locations will be designed in cooperation with USFS biologists. (5-5)*

    - SOURCE: FONSI – US68/KY80 Item No. 1-180.00
    - DATE: September 2006
    - RESOLUTION: Not applicable to this construction project

45. DESCRIPTION: A detailed sign plan, in accordance with MUTCD and when applicable, the Sign Handbook provided to KYTC by the USFS, will be prepared for the project. USFS will provide guidance and approval for all materials and placement for informational signs related to USFS facilities. (October 15, 2007 letter to USFS from KYTC).

    - SOURCE: FONSI – US68/KY80 Item No. 1-180.00 + KYTC Letter to USFS on 10-15-2007
    - DATE: September 2006
    - RESOLUTION: Included in Phase II Design – See Plans

WILDLIFE CROSSING STRUCTURES

46. DESCRIPTION: Stream crossings (culverts and bridges) will allow for passage at all terrestrial and aquatic life stages. Specific locations and types of passage will be confirmed during final design. (5-5)*

    - SOURCE: FONSI – US68/KY80 Item No. 1-180.00
    - DATE: September 2006
    - RESOLUTION: Included in Phase II Design – See Plans

47. DESCRIPTION: Bifurcated Locations - If bifurcated alignments are chosen, crossing structures will be placed at higher frequency and density within the bifurcated sections where appropriate to avoid barrier effects that would create an island of habitat. (5-5)*

    - SOURCE: FONSI – US68/KY80 Item No. 1-180.00
    - DATE: September 2006
    - RESOLUTION: Not applicable to this construction project

48. DESCRIPTION: Bats - Where reasonable and appropriate, culverts will be designed to provide bat roosts. (5-6)*

    - SOURCE: FONSI – US68/KY80 Item No. 1-180.00
    - DATE: September 2006
    - RESOLUTION: Not applicable to this construction project

49. DESCRIPTION: Crossing structures will be maintained to ensure they remain accessible and useable for wildlife. This will involve inspecting openings and some vegetation control. (5-6)*

    - SOURCE: FONSI – US68/KY80 Item No. 1-180.00
    - DATE: September 2006
    - RESOLUTION: Not applicable to this construction project. Future responsibility of KYTC District 1 Maintenance Department

50. DESCRIPTION: Culvert design and placement will include but will not be limited to providing safety and habitat to a variety of species where reasonable and appropriate. (5-5, 5-6)*

    - SOURCE: FONSI – US68/KY80 Item No. 1-180.00
    - DATE: September 2006
    - RESOLUTION: Not applicable to this construction project

CONSTRUCTION DISTURBANCES

51. DESCRIPTION: Construction that crosses the Devil's Elbow 7 nest secondary management zone for bald eagles should be minimized during the nesting season (Oct. 15 to May 15) to avoid disturbances. (5-6)*

    - SOURCE: FONSI – US68/KY80 Item No. 1-180.00
    - DATE: September 2006
    - RESOLUTION: Not applicable to this construction project

52. DESCRIPTION: Construction near streams will be restricted to normal daytime hours in the summer (May 15-August 15) when gray bats are present. (3-80)*

    - SOURCE: FONSI – US68/KY80 Item No. 1-180.00
    - DATE: September 2006
    - RESOLUTION: Special Note added to Roadway Plans

53. DESCRIPTION: Considerations will be given to moving existing osprey nests and nesting platforms in close proximity to the bridge prior to construction as well as building additional osprey nesting platforms at suitable locations in Lake Barkley and Kentucky Lake away from the bridge. Any movement of nests or platforms will be done during the non-nesting season (August - March). (3-81, 5-5)*

    - SOURCE: FONSI – US68/KY80 Item No. 1-180.00
    - DATE: September 2006
    - RESOLUTION: Completed by KYTC prior to this construction project

54. DESCRIPTION: Limiting bridge construction operations below water to the cool months of November to April would reduce overall impacts to aquatic organisms. (3-81)*

    - SOURCE: FONSI – US68/KY80 Item No. 1-180.00
    - DATE: September 2006
    - RESOLUTION: Special Note added to Roadway Plans

55. DESCRIPTION: In-channel work would be restricted to periods of low flow (typically late summer through fall). (3-81)*

    - SOURCE: FONSI – US68/KY80 Item No. 1-180.00
    - DATE: September 2006
    - RESOLUTION: Special Note added to Roadway Plans

56. DESCRIPTION: Disturbance would only take place within the project disturbance limits. (3-81)*

    - SOURCE: FONSI – US68/KY80 Item No. 1-180.00
    - DATE: September 2006
    - RESOLUTION: Special Note added to Roadway Plans

57. DESCRIPTION: Construction near streams would be restricted to normal daytime hours in the summer (May 15-August 15). (3-80)*

    - SOURCE: FONSI – US68/KY80 Item No. 1-180.00
    - DATE: September 2006
    - RESOLUTION: Special Note added to Roadway Plans

58. DESCRIPTION: In the LBL, tree clearing and snag removal will be kept to a minimum and limited to the construction limits. Within bifurcated sections, tree clearing will be kept to a minimum, and woods will be kept in as much a natural state as reasonable. Forested sections will be managed in accordance with the LBL forest management plan. Trees to be removed in the new right-of-way will be marked by USFS crews and removed by the roadway construction contractor. (5-7)*

    - SOURCE: FONSI – US68/KY80 Item No. 1-180.00
    - DATE: September 2006
    - RESOLUTION: Not applicable to this construction project

59. DESCRIPTION: Disturbed areas will be re-vegetated with grasses, woody vegetation and/or wildflowers, as specified in the vegetation/landscape plan that will be developed by the KYTC with

assistance from the USFS during the final design. KYTC would work with KY Commerce Cabinet Department of Parks staff on the details of the plan for the portion of the project in Kenlake State Park. (3-81, 5-4, 5-5)*

- SOURCE: FONSI – US68/KY80 Item No. 1-180.00
- DATE: September 2006
- RESOLUTION: Included in Phase II Design – See Plans

60. DESCRIPTION: Where kudzu and other invasive species are present, roadway construction activities will take place before flowering in the late summer. Construction equipment will be inspected and vegetation removed. (3-81, 5-7)*

    - SOURCE: FONSI – US68/KY80 Item No. 1-180.00
    - DATE: September 2006
    - RESOLUTION: Special Note added to Roadway Plans

61. DESCRIPTION: Heavy equipment that had previously (within the last two weeks) been utilized in waters infested by zebra mussels will be thoroughly cleaned and left to dry for at least two weeks prior to use in construction to prevent the spread of this invasive species. (3-81, 5-8)*

    - SOURCE: FONSI – US68/KY80 Item No. 1-180.00
    - DATE: September 2006
    - RESOLUTION: Special Note added to Roadway Plans

62. DESCRIPTION: Depressed grass medians are to be used in-lieu of raised grass medians for the project as part of Design Build Project No. 6, Item No 1-180.55 (Per October 15, 2007 letter from KYTC to USFS)

    - SOURCE: FONSI – US68/KY80 Item No. 1-180.00 + KYTC Letter to USFS on 10-15-2007
    - DATE: September 2006
    - RESOLUTION: Not applicable to this construction project

63. DESCRIPTION: Construct a grade separated intersection with US 68/KY 80 and KY 453 (The Trace) as a part of Design Build Project No. 6 Item No. 1-180.55 (Per October 15, 2007 letter from KYTC to USFS)

    - SOURCE: FONSI – US68/KY80 Item No. 1-180.00 + KYTC Letter to USFS on 10-15-2007
    - DATE: October 15, 2007
    - RESOLUTION: Not applicable to this construction project

64. DESCRIPTION: Within the LBL, the KYTC will consider in-kind replacement of loss of open lands as designated by USFS LBL by reclaiming old fields elsewhere in LBL.

    - SOURCE: FONSI – US68/KY80 Item No. 1-180.00
    - DATE: September 2006
    - RESOLUTION: Not applicable to this construction project

THREATENED and ENDANGERED SPECIES of SPECIAL CONCERN

65. DESCRIPTION: Tree cutting will be minimized near bald eagle secondary management zones to maintain vegetative screening. (3-80 to 3-81, 5-7)*

    - SOURCE: FONSI – US68/KY80 Item No. 1-180.00
    - DATE: September 2006
    - RESOLUTION: Not applicable to this construction project

66. DESCRIPTION: Bridge construction activities in Lake Barkley near the osprey nests will not occur during the active nesting season (mid-March thru July). Individual nests will be monitored to insure that nesting is not active. (3-80 to 3-81, 5-7)*

    - SOURCE: FONSI – US68/KY80 Item No. 1-180.00
    - DATE: September 2006
    - RESOLUTION: Not applicable to this construction project

67. DESCRIPTION: Construction near streams would be restricted to normal daytime hours in the summer (May 15-August 15). (3-80)*

    - SOURCE: FONSI – US68/KY80 Item No. 1-180.00
    - DATE: September 2006
    - RESOLUTION: Special Note added to Roadway Plans

VEGETATION

68. DESCRIPTION: Banks will be constructed similar to pre-disturbance slopes and elevations and stabilized with natural vegetation. Shorelines will be stabilized with native woody plants, including trees, where practicable and sustainable. Retaining walls in general locations may be needed to minimize impacts (3-13, 5-2)*

    - SOURCE: FONSI – US68/KY80 Item No. 1-180.00
    - DATE: September 2006
    - RESOLUTION: Included in Phase II Design – See Plans

69. DESCRIPTION: Disturbed areas will be re-vegetated with grasses, woody vegetation and/or wildflowers, as specified in the vegetation/landscape plan that will be developed by the KYTC with assistance from the USFS during the final design. KYTC would work with KY Commerce Cabinet Department of Parks staff on the details of the plan for the portion of the project in Kenlake State Park. (3-81, 5-4, 5-5)*

    - SOURCE: FONSI – US68/KY80 Item No. 1-180.00
    - DATE: September 2006
    - RESOLUTION: Included in Phase II Design – See Plans

70. DESCRIPTION: Mature trees will be installed in Fenton to replace the vegetated screen along the south side of US68/KY 80. The final landscape plan will include the replacement trees. (5-11)*

    - SOURCE: FONSI – US68/KY80 Item No. 1-180.00
    - DATE: September 2006
    - RESOLUTION: Not applicable to this construction project

INVASIVE SPECIES

71. DESCRIPTION: Disturbed areas will be re-vegetated with grasses, woody vegetation and/or wildflowers, as specified in the vegetation/landscape plan that will be developed by the KYTC with assistance from the USFS during the final design. KYTC would work with KY Commerce Cabinet Department of Parks staff on the details of the plan for the portion of the project in Kenlake State Park. (3-81, 5-4, 5-5)*

    - SOURCE: FONSI – US68/KY80 Item No. 1-180.00
    - DATE: September 2006
    - RESOLUTION: Included in Phase II Design – See Plans

72. DESCRIPTION: Where kudzu and other invasive species are present, roadway construction activities will take place before flowering in the late summer. Construction equipment will be inspected and vegetation removed. (3-81, 5-7)*

- SOURCE: FONSI – US68/KY80 Item No. 1-180.00
- DATE: September 2006
- RESOLUTION: Special Note added to Roadway Plans

73. DESCRIPTION: Heavy equipment that had previously (within the last two weeks) been utilized in waters infested by zebra mussels will be thoroughly cleaned and left to dry for at least two weeks prior to use in construction to prevent the spread of this invasive species. (3-81, 5-8)*

    - SOURCE: FONSI – US68/KY80 Item No. 1-180.00
    - DATE: September 2006
    - RESOLUTION: Special Note added to the Roadway Plans

CULTURAL RESOURCES

74. DESCRIPTION: Those portions of Site 15Tr1 that contain intact deposits have been avoided by the proposed project. If during ROW phase, it is determined that additional property from the Parcel 402 is to be purchased (for example, as an uneconomic remnant), beyond that identified in the current plans as necessary for the construction of the project, FHWA shall consult with the KHC regarding proposed long-term use of the property, the potential effects on the archaeological site, and the ultimate disposal of the parcel. The objective of the consultation will be to either establish a means for permanent protection of the site or portions of the site affected, or to excavate the site, exhausting its potential to yield further significant data. (5-8)*

    - SOURCE: FONSI – US68/KY80 Item No. 1-180.00
    - DATE: September 2006
    - RESOLUTION: Not applicable to this construction project

75. DESCRIPTION: If archaeological materials are uncovered during construction, all construction work in the area of the find(s) would cease. The KHC SHPO office would be contacted immediately so that a representative of that office may have the opportunity to examine and evaluate the materials. If human remains are discovered during construction, all activity in the vicinity of the remains would cease immediately, and the state medical examiner and the appropriate local law enforcement agency would be contacted. If materials are discovered on any state or federally owned property, then representatives of the administering agency also would be contacted. (5-8)*

    - SOURCE: FONSI – US68/KY80 Item No. 1-180.00
    - DATE: September 2006
    - RESOLUTION: Special Note added to the Roadway Plans

76. DESCRIPTION: TVA's Cultural Resources staff will work with FHWA/KYTC to draft appropriate Section 106 documentation to evidence TVA's involvement in the project compliance. (A-37 to A-38)*

    - SOURCE: FONSI – US68/KY80 Item No. 1-180.00
    - DATE: September 2006
    - RESOLUTION: Included in Phase I and Phase II Design – See Plans

UNDERGROUND STORAGE TANKS and HAZARDOUS MATERIALS

77. DESCRIPTION: Site #9 in LBL has been avoided by the Project. (5-9)*

    - SOURCE: FONSI – US68/KY80 Item No. 1-180.00
    - DATE: September 2006
    - RESOLUTION: Not applicable to this construction project

78. DESCRIPTION: A vegetation and landscape plan will be developed by the KYTC for the project area during final design and will be included in the contract documents. The KYTC will work with the USFS to develop the LBL portion of the vegetation and landscape plan. The KYTC will work with KY

Commerce Cabinet Department of Parks staff on the details of the plan for the portion of the project in Kenlake State Resort Park. The plan will address replantings as well as noxious weeds. (5-10)*

- SOURCE: FONSI – US68/KY80 Item No. 1-180.00
- DATE: September 2006
- RESOLUTION: Included in Phase II Design – See Plans

79. DESCRIPTION: KYTC coordination with USFS during design and engineering efforts for portions of highway that cross LBL and the two lakes so that the appearance of the improved road will complement the recreational objectives of LBL. (5-10)*

    - SOURCE: FONSI – US68/KY80 Item No. 1-180.00
    - DATE: September 2006
    - RESOLUTION: Included in Phase I and Phase II Design – See Plans

80. DESCRIPTION: "Light-Sensitive" design will be used for any lighting to be installed that impacts the sky over LBL. Any lighting plan is subject to final approval of the USFS. (Per October 15, 2007 letter to USFS from KYTC)

    - SOURCE: FONSI – US68/KY80 Item No. 1-180.00 + KYTC Letter to USFS on 10-15-2007
    - DATE: September 2006
    - RESOLUTION: Included in Phase II Design – See Plans

81. DESCRIPTION: The KYTC will coordinate with the KY Department of Parks and the USFS during final design of this project to provide appropriate accommodation for those issues and areas of the parks directly affected by the construction of the proposed project. (5-10, A-36)*

    - SOURCE: FONSI – US68/KY80 Item No. 1-180.00
    - DATE: September 2006
    - RESOLUTION: Included in Phase I and Phase II Design – See Plans

82. DESCRIPTION: The KYTC will design and construct as part of this project a hike-bike trail between Kenlake State Resort Park and the Cadiz bypass. The design and location of the hike-bike trail will be refined during the final design of the project. KYTC will construct as part of the Design Build Project, the initial segments (in the area of Fenton Campground and from the Lake Barkley Bridge to Bacons Creek Road). The "cross-country" section will be constructed at a later date by KYTC with a separate project. USFS in conjunction with KYTC will provide design standards for this segment of the trail. Final segments of the trail will be constructed as part of the Lake Barkley and KY Lake Bridge projects. (2-14, 5-9)*

    - SOURCE: FONSI – US68/KY80 Item No. 1-180.00
    - DATE: September 2006
    - RESOLUTION: Included in Phase II Design – See Plans

83. DESCRIPTION: As part of the Lake Barkley bridge project, KYTC shall provide a walkway under the new bridge to improve access to the shoreline for fishing. Included in this shall be provisions for a parking area on the north side of the roadway. USFS will be provided opportunity to provide input into design of this walkway. (5-12)*

    - SOURCE: FONSI – US68/KY80 Item No. 1-180.00
    - DATE: September 2006
    - RESOLUTION: Not applicable to this construction project

84. DESCRIPTION: Improvements to the internal road system are provided at Fenton as per a plan to be provided by USFS. Fishing areas along the jetty are to be constructed in the Elbow Bay area. Access will be provided for the Golden Pond Picnic Area. Three Turnarounds are to be constructed at USFS

approved sites to be used as a location to provide information subject to final USFS approval. (A-35, A-36, A-41)*

- SOURCE: FONSI – US68/KY80 Item No. 1-180.00
- DATE: September 2006
- RESOLUTION: Not applicable to this construction project

85. DESCRIPTION: Access to existing causeway at Canton

- SOURCE: FONSI – US68/KY80 Item No. 1-180.00
- DATE: September 2006
- RESOLUTION: Not applicable to this construction project

KENLAKE STATE RESORT PARK

86. DESCRIPTION: Efforts will be made during final design to avoid the placement of piers or fill in the lagoon on the north side of US 68/KY 80. The KYTC will continue to coordinate with the Department of Parks through the project design on the issue of minimizing the use of the lagoon. During final design, the KYTC will investigate the possibility of additional landscaping (trees) on the north side of US 68/KY 80 to help screen the easternmost campsites in the Kenlake Campground from visual effects of the new roadway and bridge. (5-10)*

- SOURCE: FONSI – US68/KY80 Item No. 1-180.00
- DATE: September 2006
- RESOLUTION: Not applicable to this construction contract

87. DESCRIPTION: During the design process, the KYTC will investigate the feasibility of including in the design certain recreation-related elements for the portions of the park that are adjacent to US 68/KY 80. Part of this plan includes trail linkage from the park grounds to the new bridge. (5-10)*

- SOURCE: FONSI – US68/KY80 Item No. 1-180.00
- DATE: September 2006
- RESOLUTION: Included in Phase II Design – See Plans

LAND BETWEEN THE LAKES

88. DESCRIPTION: The loss of facilities at Fenton Lake Access Area will be mitigated: The loss of the swim beach north of US 68/KY 80 will be mitigated by the creation of a new beach on Lake Barkley. The KYTC will provide the funding and the USFS will construct it. (5-11)*

- SOURCE: FONSI – US68/KY80 Item No. 1-180.00
- DATE: September 2006
- RESOLUTION: Not applicable to this construction project

89. DESCRIPTION: The cement block toilet building will be replaced by the KYTC with a similar construction type. (5-11)*

- SOURCE: FONSI – US68/KY80 Item No. 1-180.00
- DATE: September 2006
- RESOLUTION: Not applicable to this construction project

90. DESCRIPTION: The loss of the western access at Fenton will be mitigated by construction of an internal road system in Fenton as part of the roadway construction contract.

- SOURCE: FONSI – US68/KY80 Item No. 1-180.00
- DATE: September 2006
- RESOLUTION: Not applicable to this construction project

91. DESCRIPTION: At Devil's Elbow Lake Access Area the KYTC will fund the replacement of the fishing pier and boat launch area, 11 primitive campsites, cement block toilet building (with a similar construction type) and portal sign and informational sign. The USFS will be responsible for designing and installing the replacement facilities. (5-11)*

    - SOURCE: FONSI – US68/KY80 Item No. 1-180.00
    - DATE: September 2006
    - RESOLUTION: Not applicable to this construction project

92. DESCRIPTION: At Golden Pond Picnic Site, the final design plans will include access to the site. The KYTC will fund and install the access. The existing picnic tables, barbeque grills, two sets of hitching posts/steps, parking area, Kentucky historical marker, and portal sign will be relocated within the picnic area. In addition, a time capsule buried at the site by former residents will be located and moved if necessary. (5-11)*

    - SOURCE: FONSI – US68/KY80 Item No. 1-180.00
    - DATE: September 2006
    - RESOLUTION: Not applicable to this construction project

93. DESCRIPTION: The southwestern embankment of the Lake Barkley Bridge will be modified to improve fishing opportunities on Lake Barkley. Access between the Energy Lake parking lot on the north side of US 68/KY 80 and the causeway on the south side will be provided as part of the construction contract. The access under the new bridge will be provided via a tunnel or walkway, which will be investigated and determined during final design. (5-12)*

    - SOURCE: FONSI – US68/KY80 Item No. 1-180.00
    - DATE: September 2006
    - RESOLUTION: Not applicable to this construction project

94. DESCRIPTION: Mature trees will be installed in Fenton to replace the vegetated screen along the south side of US68/KY 80. The final landscape plan will include the replacement trees. (5-11)*

    - SOURCE: FONSI – US68/KY80 Item No. 1-180.00
    - DATE: September 2006
    - RESOLUTION: Not applicable to this construction project

95. DESCRIPTION: KYTC shall fulfill the following mitigation requirements through the use of direct compensation to the USFS. Upon payment of said compensation by KYTC, USFS shall assume full responsibility. These are: Replace Vault Toilet Building at Fenton Boat Ramp (3-65)*; Interpretative Area: Old City of Fenton TBD (in-lieu of Beach Replacement (5-11)*; Bulletin Board at Fenton; Pay Station at Fenton; Replace Vault Toilet and Portal and Information signs at Devil's Elbow Area (3-67)*; Gate at Turkey Bay; Golden Pond Interpretative site at Golden Pond (3-66)*; Equestrian Trail Relocation Golden Pond\Wrangler Campground; and Informational Signs at New Turnouts (3-69)*

    - SOURCE: FONSI – US68/KY80 Item No. 1-180.00
    - DATE: September 2006
    - RESOLUTION: Not applicable to this construction project

UTILITIES

96. DESCRIPTION: The KYTC will continue to work with the USFS and the utility companies to accommodate the installation of underground utilities where possible. Where existing overhead electric lines will be disturbed by the construction or the project, KYTC will locate the replacement lines underground. Telephone lines and cables between Kentucky Lake and Lake Barkley will be buried except where geological conditions would prevent boring (such as under some streams and in areas of bedrock).(5-12)*

- SOURCE: FONSI – US68/KY80 Item No. 1-180.00
- DATE: September 2006
- RESOLUTION: Included in Phase II Design – See Plans

97. DESCRIPTION: Upon review of roadway, plans essentially all AT&T facilities currently installed approximately parallel and adjacent to the LBL US 68|KY 80 project corridor have been deemed impacted by the roadway project and will be placed underground. Some temporary overhead work in the area of intersection with the Trace will be necessary in order for work to begin on Buildable Unit One (The Trace Grade Separated Intersection) in a timely fashion. These costs will be borne by KYTC.

    - SOURCE: FONSI – US68/KY80 Item No. 1-180.00 + KYTC Letter to USFS on 10-15-2007
    - DATE: September 2006
    - RESOLUTION: Not applicable to this construction project

98. DESCRIPTION: Pennyrile Rural Electrical facilities installed approximately parallel and adjacent to the US 68| KY 80 project corridor, beginning near the Kentucky Lake|Fenton Campground (exact location not yet finalized) will be installed underground to Bacon Creek Road. This includes overhead facilities in the Trace Grade Separated Intersection area to a point along the Trace beyond the disturbance limits of the project. The exact limits of work along the Trace area approximately 1000 feet north of the existing bridge. No temporary relocation work is needed to begin construction on Buildable Unit One. From Bacon Creek Road to the Energy Lake Campground area, these facilities would remain overhead (with minor adjustments to allow work on the current roadway project) until they can be addressed as part of the Lake Barkley Bridge replacement. As part of the Bridge Project, the electrical facilities to provide power for the Energy Lake Campground area will be installed on the new bridge from the Cadiz side of Lake Barkley. At that point, the overhead electrical facilities from Bacon Creek Road to the Energy Lake Campground area will be removed. KYTC responsible for cost.

    - SOURCE: FONSI – US68/KY80 Item No. 1-180.00 + KYTC Letter to USFS on 10-15-2007
    - DATE: September 2006
    - RESOLUTION: Not applicable to this construction project

ADDITIONAL ENVIRONMENTAL COMMITMENTS (post FONSI)

FLOODPLAINS

99. DESCRIPTION: If causeways are used, opportunities to create additional storage volume areas in Kentucky Lake and Lake Barkley by creating wetlands and/or ponds will be considered to compensate for flooding and power capacity losses, as necessary.

    - SOURCE: Various agency meetings
    - DATE:
    - RESOLUTION: See TVA and USCE permits

RECREATION

100. DESCRIPTION: It is expected that improvements to the causeway west of Lake Barkley will take place. TVA, Kentucky Department of Fish and Wildlife Resources, and US Forest Service would like for the causeways to stay in place for recreational opportunities.

    - SOURCE: Various agency meetings
    - DATE:
    - RESOLUTION: Not applicable to this construction project

101. DESCRIPTION: Coordinate with USFS regarding special-events schedule.

    - SOURCE: Various meetings with the USFS
    - DATE:

- RESOLUTION: Special Note added to Roadway Plans

102. DESCRIPTION: Kentucky Department of Fish and Wildlife Resources would like to assist in finding an appropriate place for a pro-size boat ramp. Preliminary preference is at Fenton.

    - SOURCE: Various meetings with the KDFW
    - DATE:
    - RESOLUTION: Not applicable to this construction project

VEGETATION

103. DESCRIPTION: Landscape all four highway approaches.

    - SOURCE: Various agency meetings
    - DATE:
    - RESOLUTION: Included in Phase II Design – See Plans

GENERAL

104. DESCRIPTION: Provide 'Helper Boat" to assist barges navigating thru the construction zone at the bridge site on Kentucky Lake.

    - SOURCE: Various meetings with the USCG
    - DATE:
    - RESOLUTION: See notes in Bridge Plans and USCG Permit

105. DESCRIPTION: Provide access to and from the Shared Use Path and KenLake State Resort Park

    - SOURCE: Various meetings with KenLake SRP resident manager
    - DATE:
    - RESOLUTION: Included in Phase II Design – See Plans

106. DESCRIPTION: Provide additional parking for visitors to the area wishing to access the Shared Use Path near the KenLake SRP campground.

    - SOURCE: Various meetings with KenLake SRP resident manager
    - DATE:
    - RESOLUTION: Included in Phase II Design – See Plans

107. DESCRIPTION: Provide additional bridge under-clearance for occasional sailboats with extra tall masts.

    - SOURCE: Various early public involvement meetings
    - DATE:
    - RESOLUTION: Included in Phase I and Phase II Design – See Plans

108. DESCRIPTION: Provide utility ducts on the new lake crossing bridge

    - SOURCE: Various meetings with utility companys by KYTC D-1 personnel.
    - DATE:
    - RESOLUTION: Included in Phase II Design – See Plans

109. DESCRIPTION: Reuse construction entrances created by Advanced Contract contractor.

    - SOURCE: Various meetings with KYTC D-1 construction personnel
    - DATE:
    - RESOLUTION: Included in Phase II Design – See Plans

110. DESCRIPTION: Provide “on-site” field office during the klife of the construction project for use by KYTC construction inspection personnel .

- SOURCE: Various meetings with KYTC D-1 construction personnel
- DATE:
- RESOLUTION: Special Note added to Roadway Plans

111. DESCRIPTION: Provide “on-site” power boat during the life of the construction project for use by KYTC construction inspection personnel.

- SOURCE: Various meetings with KYTC D-1 construction personnel
- DATE:
- RESOLUTION: Special Note added to Bridge Plans