TRANSPORTATION CABINET
DEPARTMENT OF HIGHWAYS

FRANKLIN COUNTY
ST. CLAIR STREET BRIDGE
OVER KENTUCKY RIVER

ESTIMATE OF QUANTITIES

SHEET NO.	RETROFIT / TASK NO.	BID NO.	BID ITEM	UNIT	QUANTITY
S4	1	23279EC	RETROFIT FLOORBEAM TOP FLANGE REPLACEMENT	EACH	4
S4	2	23279EC	RETROFIT FLOORBEAM BOTTOM FLANGE REPLACEMENT	EACH	6
S4	3	23279EC	RETROFIT FLOORBEAM BOTTOM FLANGE REPAIR	EACH	7
S5	4	23279EC	RETROFIT FLOORBEAM WEB STIFFENER REPLACEMENT	EACH	8
S5	5	23279EC	RETROFIT STRINGER END CONNECTION REPAIR	EACH	2
S6	6	23279EC	RETROFIT STRINGER EXPANSION BEARING REPLACEMENT	EACH	4
S6	7	23279EC	RETROFIT STRINGER WEB REPAIR	EACH	2
S7	8	23284EC	SIDEWALK SURFACE OVERLAY	SQ. FT.	5,542
S7	9	23282EC	RETROFIT SIDEWALK K-BRACE ANGLE REPAIR	LIN. FT.	44
S8	10	23280EC	RETROFIT SDWK EDGE BEAM CHANNEL SUPPORT REPAIR	LUMP SUM	1
S9	11	23279EC	RETROFIT SIDEWALK CHANNEL REPAIR	EACH	3
S9	12	23279EC	RETROFIT SIDEWALK CROSSBEAM CHANNEL REPLACEMENT	EACH	2
S10	13	23279EC	RETROFIT SIDEWALK CB CHANNEL EXP BRG REPLACEMENT	EACH	2
S11	14	23286EC	RETROFIT CONCRETE CURB AND SDWK CB SUPPORT REPAIR	CU. FT.	51
S12	15	03298	EXPAN JOINT REPLACE 4 INCH SIDEWALK	LIN. FT.	14
S13	16	03298	EXPAN JOINT REPLACE 4 INCH ROADWAY	LIN. FT.	26
S14	17	03304	BRIDGE OVERLAY APPROACH PAVEMENT	SQ. YD.	116
S15	18	23281EC	RETROFIT STEEL GRID DECK REPLACEMENT	SQ. FT.	600
S16	19	23282EC	RETROFIT STEEL GRID DECK WELD REPAIR	LIN. FT.	17
S16	20	23282EC	RETROFIT CB CHANNEL TO STRINGER WELD REPAIR	LIN. FT.	36
S17	21	22146EN	CONCRETE PATCHING REPAIR	SQ. FT.	121
S18	22	23282EC	RETROFIT UPPER LATERAL BRACING DBL ANGLE REPAIR	LIN. FT.	65
S19	23	23279EC	RETROFIT UPPER LATERAL BRACING CONNECTION REPAIR	EACH	6
S19	24	23279EC	RETROFIT UPPER LATERAL BRACING BAR REPLACEMENT	EACH	5
S20	25	23279EC	RETROFIT BOLT/RIVET REPLACEMENT	EACH	200
S20	26	23285EC	ABANDONED UTILITY REMOVAL	LUMP SUM	1
S20	27	23279EC	RETROFIT SIDEWALK-LEVEL PIN COLLAR REMOVAL	EACH	14
S21	28	23280EC	RETROFIT CAPACITY INCREASE OF US TRUSS	LUMP SUM	1
S22	29	23280EC	RETROFIT CAPACITY INCREASE OF DS TRUSS	LUMP SUM	1
A1		02014	BARRICADE-TYPE III	EACH	4
A1		02259	FENCE-TEMP.	LIN. FT.	100
A1		02562	SIGNS	SQ. FT.	45
A1		02653	LANE CLOSURE	EACH	2
		02650	MAINTAIN AND CONTROL TRAFFIC	LUMP SUM	1
		02568	MOBILIZATION	LUMP SUM	1
		02569	DEMOBILIZATION	LUMP SUM	1

INDEX OF SHEETS

Sheet No.	Description
S1	TITLE SHEET
S2	GENERAL NOTES
S3	LAYOUT
S4-S22	RETROFIT DETAILS
A1	MAINTENANCE OF TRAFFIC PLAN

SPECIAL NOTES

SPECIAL PROVISIONS

4 WELDING STEEL BRIDGES
82 GENERAL PROGRESS SCHEDULE

STANDARD DRAWINGS

BJE-001-11	NEOPRENE EXPANSION DAMS AND ARMORED EDGES
TTD-100	MISCELLANEOUS TRAFFIC CONTROL DEVICES
TTD-105	MISCELLANEOUS TRAFFIC CONTROL DEVICES
TTD-110	POST SPLICING DETAIL

SPECIFICATIONS

2008 STANDARD SPECIFICATIONS FOR ROAD AND BRIDGE CONSTRUCTION.

2002 AASHTO STANDARD SPECIFICATIONS FOR HIGHWAY BRIDGES.

Commonwealth of Kentucky
DEPARTMENT OF HIGHWAYS
COUNTY OF
FRANKLIN

ITEM NO. _____

PROJECT NUMBER: FE02-037-060X-B00065N

LETTING DATE: _____

RECOMMENDED BY: _____ DATE: _____
PROJECT MANAGER

PLAN APPROVED BY: _____ DATE: _____
STATE HIGHWAY ENGINEER

ITEM NUMBER

STATE OF KENTUCKY
BRADLEY N. ROBSON
17627
LICENSED
PROFESSIONAL ENGINEER

Bradley N. Robson
BRADLEY N. ROBSON
P.E. 17627

March 27, 2009
DATE

REVISION	DATE

DATE: JANUARY 2009	CHECKED BY
DESIGNED BY: G.S. WILSON	G.S. HENDERSON
DETAILED BY: C.D. VICTORY	G.S. WILSON

Commonwealth of Kentucky
DEPARTMENT OF HIGHWAYS

COUNTY
FRANKLIN

ROUTE: **ST. CLAIR STREET**
CROSSING: **KENTUCKY RIVER**

TITLE

PREPARED BY
PALMER ENGINEERING CO.

SHEET NO. S1
DRAWING NO. 26522

SHEET LOCATION:
FILE NAME: ...\drawings\FINAL\SCSB_TITLE.dgn
USERNAME:
DATE: 3/27/2009 10:05:07 AM
E-SHEET NAME:

60-42-09

SPECIFICATIONS: REFERENCES TO THE SPECIFICATIONS ARE TO THE CURRENT EDITION OF THE KENTUCKY DEPARTMENT OF HIGHWAYS STANDARD SPECIFICATIONS FOR ROAD AND BRIDGE CONSTRUCTION INCLUDING ANY CURRENT SUPPLEMENTAL SPECIFICATIONS. ALL REFERENCES TO THE AASHTO SPECIFICATIONS ARE TO THE CURRENT EDITION OF THE AASHTO STANDARD SPECIFICATIONS FOR HIGHWAY BRIDGES, WITH INTERIMS. ALL REFERENCES TO THE ASTM STANDARDS ARE TO THE CURRENT EDITION OF THE ASTM SPECIFICATIONS, WITH INTERIMS.

MATERIALS DESIGN SPECIFICATIONS: THE CONTRACTOR SHALL HAVE IN HIS POSSESSION ALL OF THE MATERIALS NECESSARY FOR THE COMPLETION OF EACH REPAIR AND ALL NECESSARY APPROVALS FROM THE ENGINEER PRIOR TO STARTING THE REMOVAL OF ANY STRUCTURAL ELEMENTS FROM THE BRIDGE.

FOR CLASS AA CONCRETE:	F'C = 4,000 PSI
FOR CLASS M CONCRETE:	F'C = 4,000 PSI
FOR EPOXY COATED STEEL REINFORCEMENT:	FY = 60,000 PSI

ASTM SPECIFICATIONS, CURRENT EDITION, AS DESIGNATED BELOW SHALL GOVERN THE MATERIALS FURNISHED.

MATERIAL	ASTM, CURRENT ED.
STRUCTURAL STEEL	A709 GRADE 36 OR A572 (SEE NOTE BELOW)
BOLTS	A325
EPOXY-RESIN-BASE BONDING SYSTEMS FOR CONCRETE	C881, TYPE V
SAMPLING AND TESTING GROUT	C1019

STRUCTURAL STEEL: THE CONTRACTOR SHALL BE PERMITTED TO SUBSTITUTE ASTM A572 STEEL FOR THE A36 STEEL SPECIFIED IN THE FOLLOWING RETROFIT DETAILS.

DIMENSIONS: THE CONTRACTOR SHALL VERIFY ELEVATIONS AND DIMENSIONS, INCLUDING THICKNESS OF PARTS, WITH FIELD MEASUREMENTS PRIOR TO ORDERING MATERIALS OR FABRICATING STEELWORK. ALL PLAN DIMENSIONS ARE FOR A NORMAL TEMPERATURE OF 60°F. LAYOUT DIMENSIONS ARE HORIZONTAL DIMENSIONS.

BRIDGE PLANS: A COPY OF AVAILABLE BRIDGE PLANS WILL BE MADE AVAILABLE TO THE SUCCESSFUL BIDDER UPON WRITTEN REQUEST.

ON SITE INSPECTION: EACH CONTRACTOR SUBMITTING A BID FOR THIS WORK SHALL MAKE A THOROUGH INSPECTION OF THE BRIDGE AND THE WORK SITE PRIOR TO SUBMITTING A BID AND SHALL BE THOROUGHLY FAMILIARIZED WITH EXISTING CONDITIONS SO THAT WORK CAN BE EXPEDITIOUSLY PERFORMED AFTER A CONTRACT IS AWARDED. A SUITABLE METHOD OF PERFORMING THE WORK DESCRIBED HEREIN SHOULD BE INVESTIGATED. SUBMISSION OF A BID WILL BE CONSIDERED EVIDENCE OF THIS INSPECTION HAVING BEEN MADE. ANY CLAIMS FROM SITE CONDITIONS WILL NOT BE HONORED BY THE DEPARTMENT OF HIGHWAYS.

VERIFYING FIELD CONDITIONS: PLAN DIMENSIONS AND DETAILS RELATIVE TO THE EXISTING STRUCTURE ARE SUBJECT TO NOMINAL CONSTRUCTION VARIATIONS. IT SHALL BE THE CONTRACTOR'S RESPONSIBILITY TO VERIFY SUCH DIMENSIONS AND DETAILS IN THE FIELD AND MAKE THE NECESSARY APPROVED ADJUSTMENTS PRIOR TO CONSTRUCTION OR ORDERING OF MATERIALS. SUCH VARIATIONS SHALL NOT BE CAUSE FOR ADDITIONAL COMPENSATION FOR A CHANGE IN THE SCOPE OF THE WORK; HOWEVER THE CONTRACTOR WILL BE PAID FOR THE QUANTITY ACTUALLY FURNISHED AT THE UNIT PRICE BID FOR THE WORK. IN ADDITION, THE OVERRUN AND UNDERRUN FORMULAS MAY BE APPLIED TO APPROPRIATE REPAIRS PROVIDED THAT THE REQUIREMENTS OF ARTICLE 104.02.02 OF THE STANDARD SPECIFICATIONS ARE SATISFIED.

COOPERATION BY CONTRACTOR: THE CONTRACTOR IS ADVISED THAT ADDITIONAL CONTRACTS MAY BE LET WITHIN THE PROJECT LIMITS PRIOR TO THE COMPLETION OF THIS PROJECT. CONTRACTORS WORKING ON THE SAME PROJECT OR ADJACENT PROJECTS SHALL COOPERATE WITH EACH OTHER.

MAINTAINING TRAFFIC: SEE MAINTENANCE OF TRAFFIC PLAN.

RIVER NAVIGATION: CONTINUOUS MAINTENANCE AND SAFETY OF RIVER NAVIGATION THROUGHOUT THE TERM OF THE PROJECT SHALL BE A PRIME CONSIDERATION. ALL WORK INVOLVING THE INSTALLATION OR REMOVAL OF THE STRUCTURAL ELEMENTS BENEATH THE BRIDGE DECK SHALL CEASE WHEN THERE IS APPROACHING RIVER TRAFFIC. THIS WORK SHALL NOT RESUME UNTIL THE RIVER TRAFFIC IS CLEAR OF THE BRIDGE AREA.

AT LEAST 30 DAYS IN ADVANCE OF BEGINNING CONSTRUCTION, THE SUCCESSFUL CONTRACTOR SHALL SUBMIT TO THE DEPARTMENT (FOR SUBMITTAL TO THE COAST GUARD) A WORK PLAN FOR PERFORMING WORK OVER THE KENTUCKY RIVER. THIS WORK PLAN SHALL INCLUDE BUT IS NOT LIMITED TO METHODS FOR CONTAINING DEBRIS, DEBRIS REMOVAL FROM STREAM, AND MAINTENANCE OF EXISTING NAVIGATIONAL LIGHTING DURING CONSTRUCTION.

THE CONTRACTOR MUST ADVISE THE COAST GUARD OF THE CONTRACTOR'S PROPOSED SCHEDULE OF WORK AT LEAST 10 DAYS PRIOR TO THE COMMENCEMENT OF ANY FIELD OPERATIONS. THE NOTIFICATION SHALL BE ADDRESSED TO:
COMMANDER
ISC ST. LOUIS
1222 SPRUCE STREET
ST. LOUIS, MISSOURI 63103
PHONE: 314-539-7601

REINFORCEMENT: DIMENSIONS SHOWN FROM THE FACE OF CONCRETE TO BARS ARE TO CENTER OF BARS UNLESS OTHERWISE SHOWN. SPACING OF BARS IS FROM CENTER TO CENTER OF BARS. CLEAR DISTANCE TO FACE OF CONCRETE IS 2", UNLESS OTHERWISE NOTED. EPOXY COAT BARS DESIGNATED BY SUFFIX (E) IN ACCORDANCE WITH SECTION 811.10 OF THE STANDARD SPECIFICATIONS. USE STIRRUP BEND DIAMETERS FOR BARS DESIGNATED BY SUFFIX (S) IN A BILL OF REINFORCEMENT.

EPOXY COATED REINFORCING STEEL: ALL PROPOSED REINFORCING BARS IN THE PLANS SHALL BE EPOXY COATED IN ACCORDANCE WITH SECTION 811.10 OF THE STANDARD SPECIFICATIONS.

EXISTING STEEL REINFORCEMENT: THE COST OF CUTTING, BENDING, AND CLEANING EXISTING STEEL REINFORCEMENT SHALL BE INCIDENTAL TO THE RETROFIT ITEM BEING COMPLETED.

BEVELED EDGES: BEVEL ALL EXPOSED EDGES 7/8", UNLESS OTHERWISE NOTED.

BONDING FRESH CONCRETE TO EXISTING CONCRETE: FRESH CONCRETE SHALL BE BONDED TO EXISTING CONCRETE IN ACCORDANCE WITH 601.03.10(B) OF THE SPECIFICATIONS. IN ADDITION, AN APPROVED EPOXY RESIN SYSTEM SHALL BE APPLIED BEFORE PLACING NEW CONCRETE. THE COST OF THIS WORK, INCLUDING ALL LABOR, TOOLS, AND MATERIALS, SHALL BE CONSIDERED INCIDENTAL TO THE SPECIFIC BID FOR WHICH THIS WORK APPLIES.

SAW CUTTING EXISTING CONCRETE OR MASONRY: PRIOR TO THE REMOVAL OF THE EXISTING CONCRETE OR MASONRY, CUT THE SURFACE WITH A CONCRETE SAW TO A DEPTH OF ONE INCH TO FACILITATE A NEAT LINE. THE COST OF CUTTING CONCRETE OR MASONRY SHALL BE INCIDENTAL TO THE CONTRACT. PRECAUTIONS SHALL BE EXERCISED TO PROTECT ANY UNDERLYING SOUND CONCRETE OR MASONRY.

PAYMENT FOR STRUCTURAL STEEL: THE APPROXIMATE WEIGHT OF STRUCTURAL STEEL DOES NOT INCLUDE OVERRUN OR WELD MATERIAL. THE APPROXIMATE WEIGHT SHOWN IN THE PLANS IS BASED UPON EXISTING PLANS AND FIELD MEASUREMENTS.

PAYMENT FOR STRUCTURAL STEEL REPAIRS: THE UNIT PRICE BID FOR ALL STRUCTURAL STEEL REPAIR BID ITEMS LISTED IN THE ESTIMATE OF QUANTITIES SHALL BE FULL COMPENSATION FOR ACCESS, TEMPORARY SUPPORTS, REMOVING EXISTING RIVETS, DRILLING, REAMING, CUTTING, WELDING, REMOVING DETERIORATED METAL, AND ALL NEW MATERIALS, LABOR, EQUIPMENT, TOOLS, AND INCIDENTALS NECESSARY TO COMPLETE EACH ITEM OF WORK.

MILL TEST REPORTS: NOTARIZED MILL TEST REPORTS SHALL BE FURNISHED IN TRIPLICATE TO THE DEPARTMENT SHOWING THAT ALL THE MATERIALS USED IN THE STRUCTURAL STEEL REPAIRS CONFORM TO THE REQUIREMENTS OF THE SPECIFICATIONS.

WELDING SPECIFICATIONS: ALL WELDING AND WELDING MATERIAL SHALL CONFORM TO JOINT SPECIFICATION ANSI/AASHTO/AWS D1.5 BRIDGE WELDING CODE. SPECIAL PROVISION 4, CURRENT EDITION, SHALL SUPERSEDE THE AWS SPECIFICATIONS IN WELDING OF NEW STRUCTURAL STEEL.

WELD SIZES: UNLESS SPECIFIED OTHERWISE, USE THE FOLLOWING FILLET WELD SIZES:

MATERIAL THICKNESS OF THICKER PART JOINED (IN.)	MINIMUM SIZE OF FILLET WELD (IN.)
TO 1/4" INCLUSIVE	1/8"
OVER 1/4" TO 1/2"	3/16"
OVER 1/2" TO 3/4"	1/4"
OVER 3/4"	5/16"

PROHIBITED FIELD WELDING: EXCEPT WHERE SHOWN IN THE PLANS, NO WELDING OF ANY NATURE SHALL BE PERFORMED ON THE LOAD CARRYING MEMBERS OF THE BRIDGE WITHOUT THE WRITTEN CONSENT OF THE DIRECTOR, DIVISION OF BRIDGE DESIGN, AND THEN ONLY IN THE MANNER AND AT THE LOCATIONS DESIGNATED IN THE AUTHORIZATION.

WELDING PROCEDURES: QUALIFICATION TEST OF ALL WELDING PROCEDURES, WHEN REQUIRED BY AWS, SHALL BE COMPLETED BY THE CONTRACTOR AND APPROVED BY THE ENGINEER PRIOR TO THE FINAL APPROVAL OF THE SHOP DRAWINGS AND WELDING PROCEDURE AND THE START OF THE FABRICATION.

REMOVAL OF EXISTING RIVETS AND BOLTS: THE CONTRACTOR WILL BE PERMITTED TO REMOVE RIVETS IN ANY MANNER THAT DOES NOT DAMAGE ADJACENT STRUCTURAL STEEL. THIS MAY INCLUDE MECHANICAL REMOVAL OR OTHER METHOD APPROVED BY THE ENGINEER. USE OF CUTTING TORCHES WILL NOT BE PERMITTED.

HIGH STRENGTH BOLT CONNECTIONS: ENSURE ALL BOLTED CONNECTIONS ARE ASTM A325 HIGH STRENGTH (H.S.) BOLTS, NUTS, AND WASHERS, MECHANICALLY ZINC COATED IN ACCORDANCE WITH AASHTO M298, FOR CLASS 50, UNLESS OTHERWISE SPECIFIED IN THE PLANS. ALL HIGH STRENGTH BOLTS SHALL BE TIGHTENED USING "DIRECT TENSION INDICATORS" (DTI'S) IN ACCORDANCE WITH SECTION 607.03.05 OF THE SPECIFICATIONS. ALL DTI'S SHALL BE MECHANICALLY ZINC COATED WITH BAKED EPOXY APPLIED OVER THE ZINC COATING, OR SHALL BE MANUFACTURED FROM A STEEL CONFORMING TO THE CHEMICAL REQUIREMENTS OF ASTM A325.

INCIDENTAL MATERIALS: THE STRUCTURE IS TO BE COMPLETED IN ACCORDANCE WITH THE PLANS AND SPECIFICATIONS. MATERIALS OR LABOR, NOT OTHERWISE SPECIFIED, ARE TO BE CONSIDERED INCIDENTAL TO THE CONTRACT.

SHOP DRAWINGS: THE CONTRACTOR SHALL SUBMIT FULL SIZE SETS OF PRINTS OF THE DETAILED SHOP DRAWINGS, WELDING PROCEDURES, AND DETAILED MATERIAL TO THE DEPARTMENT FOR APPROVAL IN ACCORDANCE WITH SECTION 607.03.01 OF THE SPECIFICATIONS. WHEN ANY CHANGES ARE PROPOSED BY THE FABRICATOR OR SUPPLIER, THE SHOP DRAWINGS REFLECTING THESE CHANGES SHALL BE SUBMITTED TO THE DEPARTMENT THROUGH THE CONTRACTOR.

TEMPORARY SUPPORT SYSTEMS: THIS WORK INCLUDES RAISING AND SUPPORTING THE PORTIONS OF THE STRUCTURE AS REQUIRED TO COMPLETE THE REPAIRS. IT ALSO INCLUDES THE FURNISHING OF ALL FALSEWORK, MATERIAL, EQUIPMENT, TOOLS, LABOR, AND INCIDENTALS NECESSARY TO COMPLETE THE WORK. THE TEMPORARY SUPPORTS MUST BE DESIGNED TO SUPPORT THE DEAD LOAD OF THE BRIDGE PLUS THE CONSTRUCTION LIVE LOAD ON THE BRIDGE. THE CONTRACTOR SHALL BE RESPONSIBLE FOR THIS SYSTEM AND SHALL SUBMIT A COPY OF THE CALCULATIONS AND PLANS TO THE ENGINEER FOR REVIEW PRIOR TO INSTALLATION. THESE CALCULATIONS AND PLANS SHALL BE STAMPED AND SIGNED BY A PROFESSIONAL ENGINEER LICENSED IN KENTUCKY. PROVISIONS FOR ADDITIONAL LOAD AND MOVEMENT FOR CONSTRUCTION CLEARANCE AND OPERATIONS WILL BE DETERMINED BY AND PROVIDED FOR BY THE CONTRACTOR. THE COST OF ALL MATERIALS, LABOR, EQUIPMENT, AND INCIDENTALS NECESSARY TO COMPLETE WORK SHALL BE INCIDENTAL TO THE SPECIFIC BID FOR WHICH THIS WORK APPLIES.

DAMAGE TO THE STRUCTURE: THE CONTRACTOR SHALL BEAR FULL RESPONSIBILITY AND EXPENSE FOR REPAIR OF ANY AND ALL DAMAGES TO THE STRUCTURE, SHOULD SUCH DAMAGE RESULT FROM THE CONTRACTOR'S ACTIONS.

CLEANING AND PREPARING EXISTING STEEL: ALL AREAS OF EXISTING STEEL THAT ARE TO BE IN CONTACT WITH NEW STEEL, INCLUDING AREAS UNDER BOLT HEADS, SHALL BE CLEANED (OF ALL DIRT, RUST, PRIMER, PAINT, AND OTHER FOREIGN MATTER BY POWER WIRE BRUSHING OR GRIT BLASTING) AND PREPARED BEFORE INSTALLING THE NEW STEEL IN ACCORDANCE WITH SECTION 607.03.23 OF THE SPECIFICATIONS. THE COST OF THIS CLEANING IS TO BE INCIDENTAL TO THE CONTRACT. CONTAIN ALL MATERIALS SO THAT THE KENTUCKY RIVER IS STRICTLY PROTECTED. THE ENGINEER SHALL APPROVE THE CONTRACTOR'S CONTAINMENT / COLLECTION PLAN BEFORE THIS WORK COMMENCES.

LEAD PAINT: RESIDUAL LEAD PAINT MAY STILL BE ON THE BRIDGE, EVEN AFTER PREVIOUS SANDBLASTINGS AND PAINTING OF THE BRIDGE. THE CONTRACTOR IS ADVISED TO TAKE ALL NECESSARY PROTECTIVE MEASURES WHEN REMOVING, CUTTING, OR PERFORMING ANY OTHER ACTIONS ON THE EXISTING STEEL, ESPECIALLY IN AREAS OF CONNECTIONS. THE DEPARTMENT WILL NOT CONSIDER ANY CLAIMS BASED ON LEAD PAINT.

DISPOSAL OF MATERIALS: ALL STRUCTURAL STEEL, DETERIORATED MASONRY, CONCRETE, MORTAR, AND ASPHALT OVERLAY REMOVED FROM THE BRIDGE SHALL BECOME THE PROPERTY OF THE CONTRACTOR AND SHALL BE REMOVED FROM THE RIGHT-OF-WAY.

PAINTING NEW STRUCTURAL STEEL: ALL NEW STRUCTURAL STEEL SHALL BE CLEANED AND PAINTED IN ACCORDANCE WITH SECTION 607.03.23 OF THE SPECIFICATIONS. PAINT SHALL MATCH THE EXISTING PAINT COLOR AS CLOSELY AS POSSIBLE. THE COST OF THIS CLEANING AND PAINTING SHALL BE INCIDENTAL TO THE CONTRACT.

PAINTING DAMAGED AREAS: ALL AREAS OF NEW OR EXISTING STRUCTURAL STEEL ON WHICH THE PAINT HAS BEEN DAMAGED BY THE CONTRACTOR WITH WELD BURNS, DRILLED HOLES FOR TEMPORARY MEMBERS, OR BY OTHER MEANS SHALL BE CLEANED AND SPOT PAINTED TO THE SATISFACTION OF THE ENGINEER AND IN ACCORDANCE WITH THE GENERAL NOTE FOR PAINTING NEW STRUCTURAL STEEL. THE COST OF THIS TOUCH-UP PAINTING IS TO BE INCIDENTAL TO THE CONTRACT.

QUANTITIES: THE QUANTITIES AND LOCATIONS FOR THE RETROFITS SPECIFIED IN THESE PLANS ARE APPROXIMATE AND MAY BE INCREASED OR DECREASED AS DIRECTED BY THE ENGINEER.

REVISION	DATE

DATE: JANUARY 2009	CHECKED BY
DESIGNED BY: G.S. WILSON	G.S. HENDERSON
DETAILED BY: G.S. WILSON	G.S. HENDERSON

Commonwealth of Kentucky
DEPARTMENT OF HIGHWAYS

COUNTY: **FRANKLIN**

ROUTE: **ST. CLAIR STREET** | CROSSING: **KENTUCKY RIVER**

GENERAL NOTES

ITEM NUMBER

PREPARED BY: *PALMER ENGINEERING CO.*

SHEET NO. S2

DRAWING NO. 26522

SHEET LOCATION:
FILE NAME: ...\FINAL\SCSB_GEN NOTES.dgn
USERNAME:
DATE: 3/27/2009 6:46:45 AM
E-SHEET NAME:

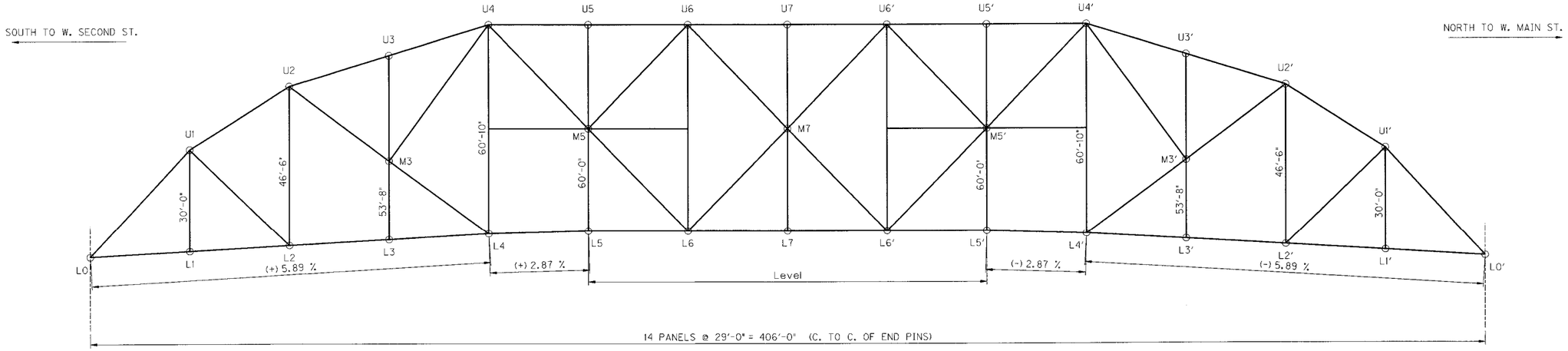

ELEVATION

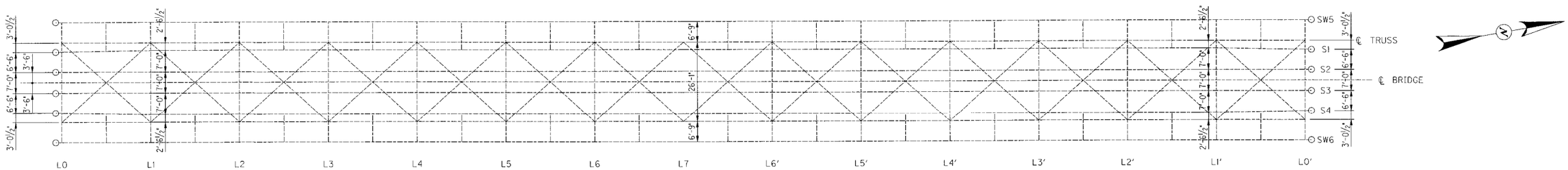

PLAN

S1 - S4 DENOTES STRINGER 1 THROUGH STRINGER 4

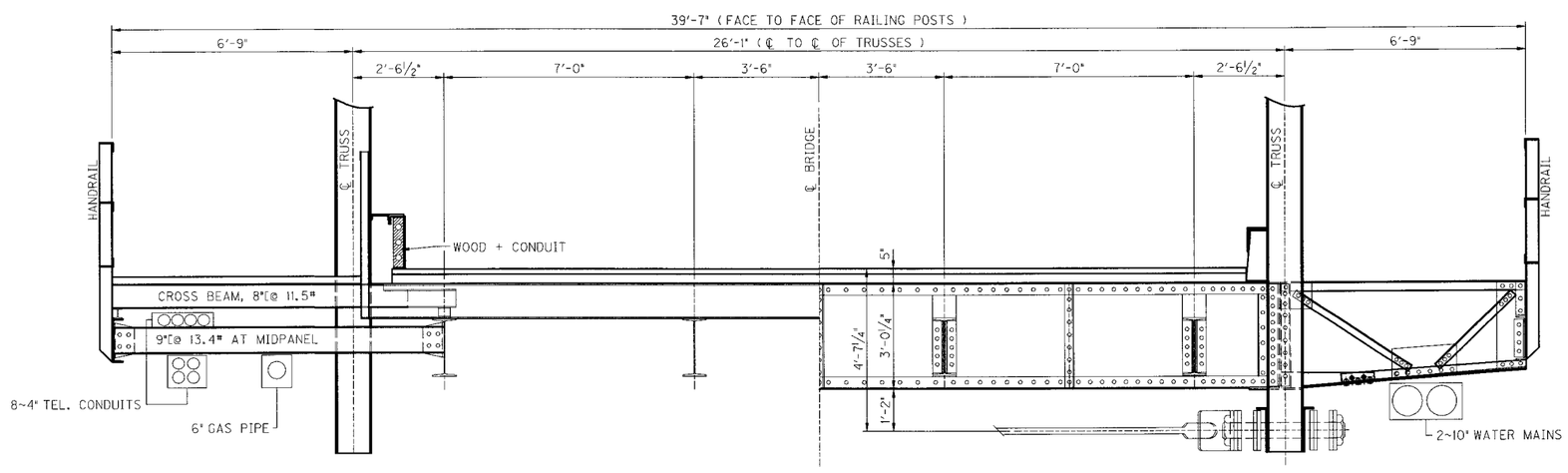

TYPICAL CROSS SECTION THROUGH FLOOR

(LOOKING SOUTH)

REVISION	DATE

DATE: JANUARY 2009	CHECKED BY
DESIGNED BY: G.S. WILSON	G.S. HENDERSON
DETAILED BY: J.A. ROSE	G.S. WILSON

Commonwealth of Kentucky
DEPARTMENT OF HIGHWAYS

COUNTY
FRANKLIN

ROUTE: **ST. CLAIR STREET** | CROSSING: **KENTUCKY RIVER**

LAYOUT

ITEM NUMBER

PREPARED BY
PALMER ENGINEERING CO.

SHEET NO. S3
DRAWING NO. 26522

SHEET LOCATION:
FILE NAME: ...\drawings\FINAL\SCSB_LAYOUT.dgn
USERNAME:
DATE: 3/27/2009 6:46:46 AM
E-SHEET NAME:

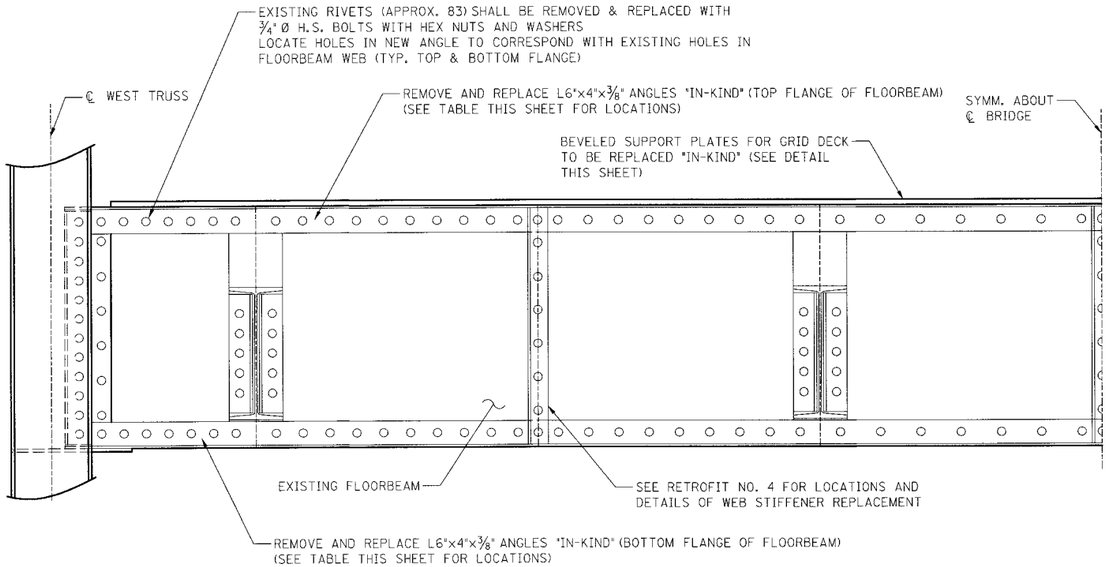

ELEVATION – FLOORBEAM

(LOOKING NORTH)

FLOORBEAM FLANGE ANGLES TO REPLACE			
FLOORBEAM LOCATION	ANGLE	NORTH FACE	SOUTH FACE
L1	TOP	●	●
	BOTTOM	●	●
L2	TOP	●	●
	BOTTOM	●	●
L1'	TOP		
	BOTTOM	●	●

● DENOTES LOCATION OF ANGLE TO BE REPLACED.

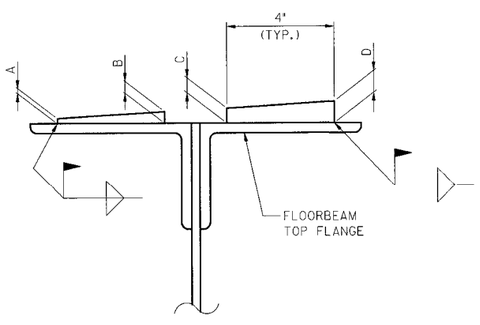

GRID DECK SUPPORT PLATES

(TYP. AT FLOORBEAMS 1, 2, & 1')

APPROX. DIMENSIONS: A = 3/16"
B = 7/16"
C = 9/16"
D = 13/16"

FLOORBEAM FLANGE REPLACEMENT

THIS WORK SHALL CONSIST OF REPLACING DETERIORATED FLOORBEAM FLANGE ANGLES (ESTIMATED 10 TOTAL ANGLES) ATTACHED TO THE FLOORBEAM WEBS AS SHOWN IN THE PLANS.

AFTER REMOVAL OF THE EXISTING ANGLE, THE SURFACE OF THE FLOORBEAM WEB SHALL BE COMPLETELY CLEANED PER SPECIFICATIONS PRIOR TO INSTALLING NEW ANGLE.

REMOVAL AND REATTACHMENT OF THE STEEL GRID DECK SHALL BE CONSIDERED INCIDENTAL TO THIS WORK.

CARE SHALL BE TAKEN TO CONTAIN AND COLLECT SPENT ABRASIVES AND ANY DEBRIS RESULTING FROM THIS WORK SO THAT THE KENTUCKY RIVER IS STRICTLY PROTECTED. THE ENGINEER SHALL APPROVE THE CONTRACTOR'S CONTAINMENT / COLLECTION PLAN BEFORE THIS WORK BEGINS.

ALL NEW STRUCTURAL STEEL SHALL BE ASTM A709, GRADE 36.

ALL NEW CONNECTIONS SHALL USE H.S. BOLTS. REUSE OF BOLTS IS NOT PERMITTED.

THE CONTRACTOR IS COMPLETELY RESPONSIBLE FOR THE STABILITY OF THE STRUCTURE DURING REPAIRS.

THE CONTRACTOR SHALL COORDINATE THE REPLACEMENT OF THE DETERIORATED FLOORBEAM FLANGE ANGLES WITH THE REPLACEMENT OF THE DETERIORATED FLOORBEAM WEB STIFFENERS (RETROFIT NO. 4) AS SHOWN IN THE PLANS.

THE CONTRACTOR SHALL FIELD VERIFY ALL BOLT AND MEMBER SIZES AND DIMENSIONS GIVEN PRIOR TO FABRICATION AND REPAIR.

SEE GENERAL NOTE SHEET FOR NOTE CONCERNING PAINTING NEW STRUCTURAL STEEL.

THE UNIT PRICE BID FOR REPLACING EACH ANGLE SHALL INCLUDE THE COST OF ALL MATERIALS, LABOR, FALSEWORK, EQUIPMENT, AND INCIDENTALS TO COMPLETE THE WORK.

RETROFIT NO. 1 & 2

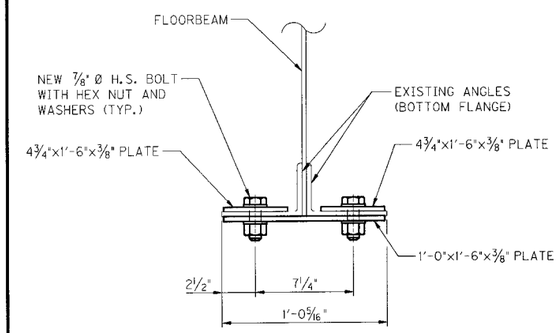

SECTION "A"

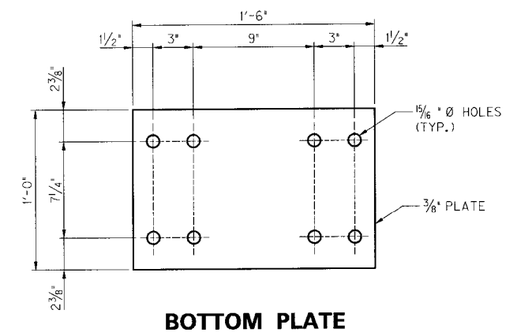

BOTTOM PLATE

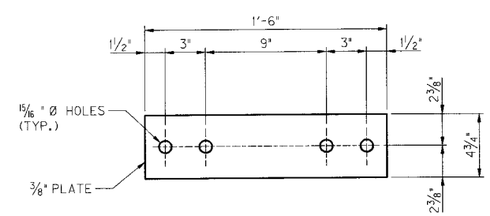

TOP PLATE

AREAS TO BE REPAIRED	
FLOORBEAM	NEAR STRINGER
L6	4
L6'	4
L4'	4
L4'	1
L3'	4
L2'	4
L1'	4

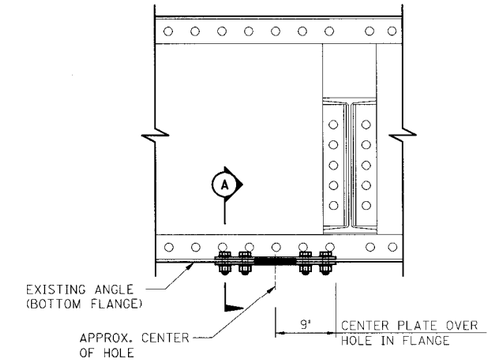

ELEVATION – FLOORBEAM

■ DENOTES APPROX. AREA OF HOLE IN FLANGE

FLOORBEAM BOTTOM FLANGE REPAIR

THIS WORK SHALL CONSIST OF REPAIRING HOLES IN FLOORBEAM BOTTOM FLANGE ANGLES (ESTIMATED 7 TOTAL LOCATIONS) AS SHOWN IN THE PLANS OR DIRECTED BY THE ENGINEER. THESE HOLES ARE TYPICALLY AT CABLE HANGER LOCATIONS. THE CABLE AND CABLE HANGERS SHALL BE REMOVED.

AREA AT HOLE LOCATIONS SHALL BE COMPLETELY CLEANED PER SPECIFICATIONS PRIOR TO INSTALLING NEW PLATES.

HOLES SHALL BE GROUND SMOOTH, FREE OF NOTCHES AND SHARP REENTRANT CORNERS.

CARE SHALL BE TAKEN TO CONTAIN AND COLLECT SPENT ABRASIVES AND ANY DEBRIS RESULTING FROM THIS WORK SO THAT THE KENTUCKY RIVER IS STRICTLY PROTECTED. THE ENGINEER SHALL APPROVE THE CONTRACTOR'S CONTAINMENT / COLLECTION PLAN BEFORE THIS WORK BEGINS.

ALL NEW STRUCTURAL STEEL SHALL BE ASTM A709, GRADE 36.

ALL NEW CONNECTIONS SHALL USE H.S. BOLTS. REUSE OF BOLTS IS NOT PERMITTED.

THE CONTRACTOR IS COMPLETELY RESPONSIBLE FOR THE STABILITY OF THE STRUCTURE DURING REPAIRS.

SEE GENERAL NOTE SHEET FOR NOTE CONCERNING PAINTING NEW STRUCTURAL STEEL.

THE UNIT PRICE BID FOR REPAIRING EACH HOLE IN THE FLOORBEAM FLANGE ANGLE SHALL INCLUDE THE COST OF ALL MATERIALS, LABOR, FALSEWORK, EQUIPMENT, AND INCIDENTALS TO COMPLETE THE WORK.

RETROFIT NO. 3

ITEM NUMBER

REVISION	DATE

DATE: JANUARY 2009	CHECKED BY
DESIGNED BY: G.S. HENDERSON	G.S. WILSON
DETAILED BY: G.S. HENDERSON	G.S. WILSON

Commonwealth of Kentucky
DEPARTMENT OF HIGHWAYS

COUNTY: FRANKLIN

ROUTE: ST. CLAIR STREET — CROSSING: KENTUCKY RIVER

RETROFITS NO. 1 THRU NO. 3

PREPARED BY: *PALMER ENGINEERING CO.*

SHEET NO. S4

DRAWING NO. 26522

E-SHEET NAME: FILE NAME: ...\SCSB_FB FLANGE REPLACE.dgn SHEET LOCATION: USERNAME: DATE: 3/27/2009 6:46:46 AM

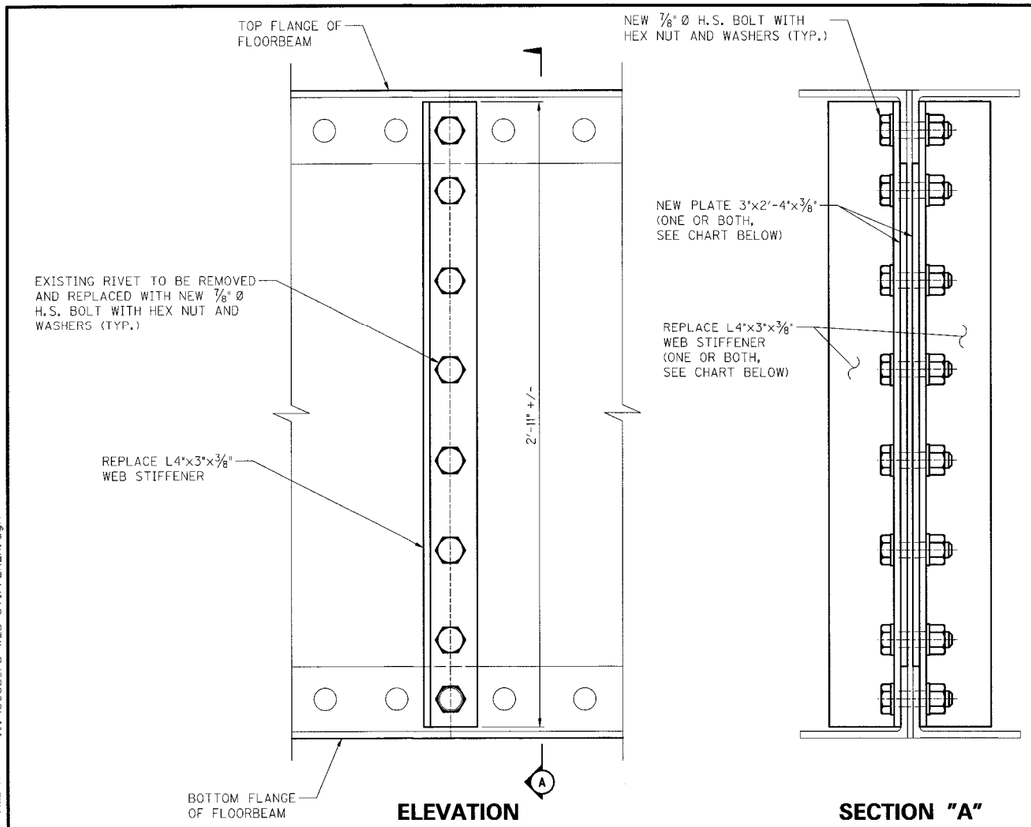

ELEVATION

SECTION "A"

FLOORBEAM WEB STIFFENER REPLACEMENT

FLOORBEAM LOCATION	SIDE	LOCATION
L1	NORTH FACE	BETWEEN STRINGER 2 & 3
L1	SOUTH FACE	BETWEEN STRINGER 2 & 3
L1	NORTH FACE	BETWEEN STRINGER 3 & 4
L1	SOUTH FACE	BETWEEN STRINGER 3 & 4
L2	SOUTH FACE	BETWEEN STRINGER 2 & 3
L2	NORTH FACE	BETWEEN STRINGER 3 & 4
L2	SOUTH FACE	BETWEEN STRINGER 3 & 4
L2'	SOUTH FACE	BETWEEN STRINGER 3 & 4

THIS WORK SHALL CONSIST OF REPLACING DETERIORATED FLOORBEAM WEB STIFFENER AS SHOWN IN THE PLANS OR DIRECTED BY THE ENGINEER.

THE CONTRACTOR SHALL FIELD VERIFY THE EXISTING WEB STIFFENER SIZES AND LENGTHS AND RIVET SIZES AND LOCATIONS. ALL NEW CONNECTIONS SHALL USE H.S. BOLTS.

ALL SURFACES TO BE ATTACHED TO NEW WEB STIFFENER SHALL BE THOROUGHLY CLEANED PER SPECIFICATIONS PRIOR TO PLACEMENT OF NEW WEB STIFFENER.

CARE SHALL BE TAKEN TO CONTAIN AND COLLECT SPENT ABRASIVES AND ANY DEBRIS RESULTING FROM THIS WORK SO THAT THE KENTUCKY RIVER IS STRICTLY PROTECTED. THE ENGINEER SHALL APPROVE THE CONTRACTOR'S CONTAINMENT / COLLECTION PLAN BEFORE THIS WORK BEGINS.

NEW STRUCTURAL STEEL SHALL BE ASTM A709, GRADE 36.

SEE GENERAL NOTE SHEET FOR NOTE CONCERNING PAINTING NEW STRUCTURAL STEEL.

THE UNIT PRICE BID FOR REPLACING EACH FLOORBEAM WEB STIFFENER SHALL INCLUDE THE COST OF ALL MATERIALS, LABOR, FALSEWORK, EQUIPMENT, AND INCIDENTALS TO COMPLETE THE WORK.

RETROFIT NO. 4

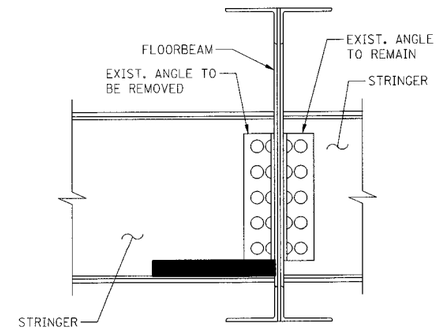

ELEVATION AT STRINGER CONNECTION – EXISTING

(STRINGER 3 AT FLOORBEAM 1, NORTH FACE SHOWN)
(STRINGER 3 AT FLOORBEAM 2, SOUTH FACE OPPOSITE HAND)

■ DENOTES APPROX. AREA OF SECTION LOSS

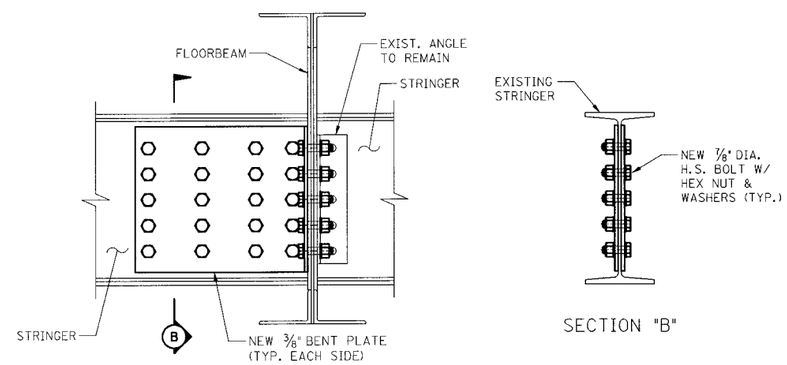

ELEVATION AT STRINGER CONNECTION – PROPOSED

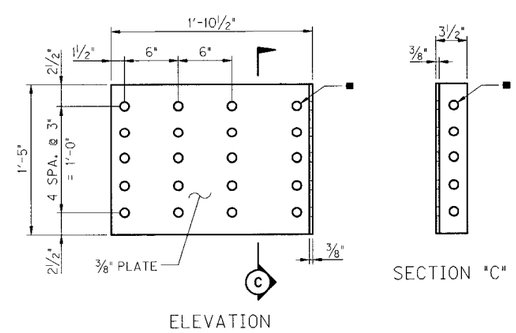

BENT PLATE DETAILS

STRINGER END CONNECTION REPAIR

THIS WORK SHALL CONSIST OF REPAIRING HOLES IN STRINGER WEB AS SHOWN IN THE PLANS OR DIRECTED BY THE ENGINEER.

THE STRINGER END REACTION (SERVICE DEAD LOADS) AT THIS REPAIR LOCATION IS APPROXIMATELY 28 KIPS.

THIS WORK INCLUDES FURNISHING AND INSTALLING NEW STRUCTURAL STEEL PLATES ON EACH SIDE OF THE STRINGER WEB AT THE REPAIR LOCATION.

ALL SURFACES TO BE ATTACHED TO NEW CONNECTION PLATE SHALL BE THOROUGHLY CLEANED PER SPECIFICATIONS PRIOR TO PLACEMENT OF NEW CONNECTION PLATE.

THE CONTRACTOR IS SOLELY RESPONSIBLE FOR THE STABILITY OF THE STRUCTURE DURING REPAIRS.

CARE SHALL BE TAKEN TO CONTAIN AND COLLECT SPENT ABRASIVES AND ANY DEBRIS RESULTING FROM THIS WORK SO THAT THE KENTUCKY RIVER IS STRICTLY PROTECTED. THE ENGINEER SHALL APPROVE THE CONTRACTOR'S CONTAINMENT / COLLECTION PLAN BEFORE THIS WORK BEGINS.

■ HOLES ARE TO BE LOCATED TO CORRESPOND WITH LOCATION OF EXISTING RIVETS ON FLOORBEAM AND STRINGER AND MUST BE FIELD VERIFIED.

THE CONTRACTOR SHALL FIELD VERIFY THE EXISTING RIVET SIZES AND LOCATIONS. ALL NEW CONNECTIONS SHALL USE H.S. BOLTS.

SEE GENERAL NOTE SHEET FOR NOTE CONCERNING PAINTING NEW STRUCTURAL STEEL.

THE UNIT PRICE BID FOR REPAIRING EACH STRINGER SHALL INCLUDE THE COST OF ALL MATERIALS, LABOR, FALSEWORK, EQUIPMENT, AND INCIDENTALS TO COMPLETE THE WORK.

ALL NEW STRUCTURAL STEEL SHALL BE ASTM A709, GRADE 36.

RETROFIT NO. 5

ITEM NUMBER

REVISION	DATE

DATE: JANUARY 2009	CHECKED BY
DESIGNED BY: G.S. HENDERSON	G.S. WILSON
DETAILED BY: G.S. HENDERSON	G.S. WILSON

Commonwealth of Kentucky
DEPARTMENT OF HIGHWAYS

COUNTY: FRANKLIN

ROUTE: ST. CLAIR STREET | CROSSING: KENTUCKY RIVER

RETROFITS NO. 4 AND NO. 5

PREPARED BY: *PALMER ENGINEERING CO.*

SHEET NO. S5

DRAWING NO. 26522

SHEET LOCATION:
FILE NAME: ...\SCSB_FB WEB STIFFENER.dgn
USERNAME:
DATE: 3/27/2009 6:46:47 AM
E-SHEET NAME:

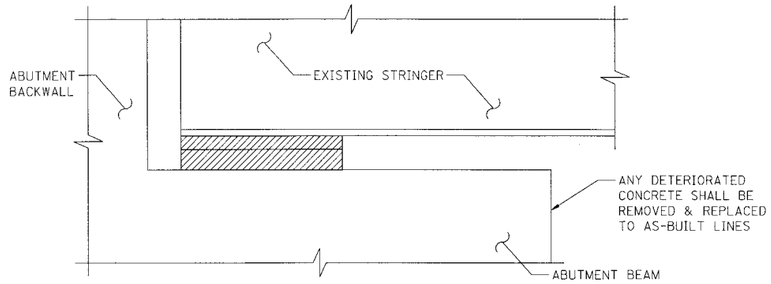

ELEVATION – EXISTING STRINGER EXPANSION BEARING

(NORTH ABUTMENT LOOKING EAST)

DENOTES EXISTING STEEL BEARINGS TO BE REMOVED. ANY EXISTING ANCHOR BOLTS SHALL BE REMOVED TO FLUSH WITH CONCRETE.

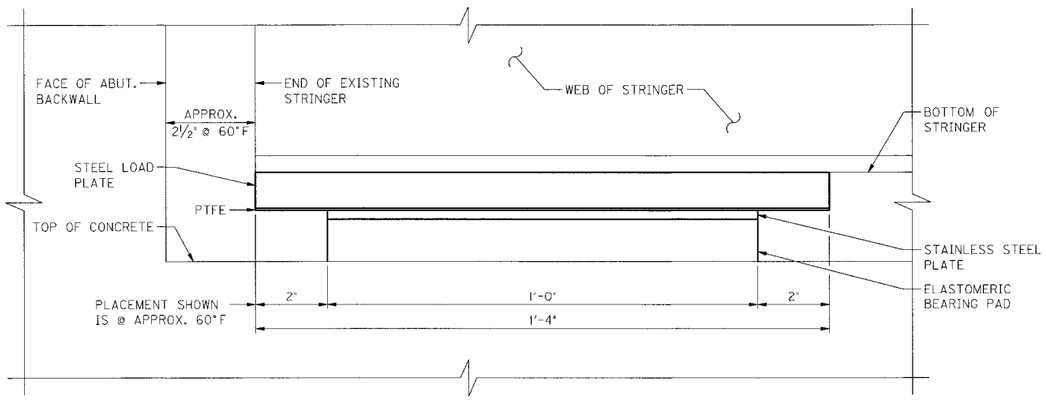

SECTION "A"

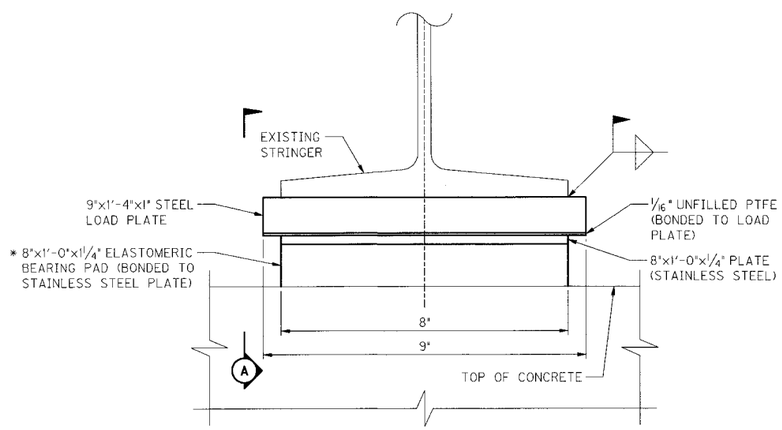

STRINGER EXPANSION BEARING

(LOOKING NORTH) - (FOUR LOCATIONS)

* THICKNESS OF ELASTOMERIC PAD MAY VARY. FIELD VERIFY TO ENSURE NEW BEARINGS ACCOMODATE REQUIRED BEARING HEIGHT.

STRINGER EXPANSION BEARING REPLACEMENT

THIS WORK SHALL CONSIST OF REMOVING EXISTING STEEL BEARING PLATES AND REPLACING WITH SLIDING BEARINGS AS SHOWN IN THE PLANS OR DIRECTED BY THE ENGINEER.

ALL SURFACES TO BE ATTACHED TO NEW BEARING SHALL BE THOROUGHLY CLEANED TO BARE METAL ENSURING REMOVAL OF ALL CORRODED AND LOOSE MATERIAL PRIOR TO PLACEMENT OF NEW BEARING.

CARE SHALL BE TAKEN TO CONTAIN AND COLLECT SPENT ABRASIVES AND ANY DEBRIS RESULTING FROM THIS WORK SO THAT THE KENTUCKY RIVER IS STRICTLY PROTECTED. THE ENGINEER SHALL APPROVE THE CONTRACTOR'S CONTAINMENT / COLLECTION PLAN BEFORE THIS WORK BEGINS.

ALL DETERIORATED CONCRETE ON THE ABUTMENT BEARING SURFACE SHALL BE REMOVED AND REPLACED TO AS-BUILT LINES.

IN ORDER TO PLACE NEW BEARINGS AS SHOWN, TEMPORARY SUPPORT MAY BE REQUIRED. THE CONTRACTOR IS COMPLETELY RESPONSIBLE FOR THE STABILITY OF THE STRUCTURE DURING REPAIRS.

ENSURE THAT BEARINGS (TOP AND BOTTOM) ARE IN FULL CONTACT UNDER DEAD LOAD ONLY CONDITIONS.

THE ELASTOMERIC PAD THICKNESS SHALL BE SIZED TO ENSURE REQUIRED BEARING HEIGHT.

THE BEARINGS ARE TO BE POSITIONED SO THAT THE LOWER PLATE IS UNDER UNIFORM LOAD THROUGHOUT THE MOVEMENT OF THE BEARING AND THAT FOREIGN MATTER DOES NOT COLLECT ON THE LOWER ELEMENT.

NEW STAINLESS STEEL SHALL BE SERIES 300 AND SHALL HAVE AN ANSI 125 OR SMOOTHER FINISH.

NEW STRUCTURAL STEEL PLATES SHALL BE ASTM A709, GRADE 36.

THE UNIT PRICE BID FOR REPLACING EACH EXPANSION BEARING SHALL INCLUDE THE COST OF ALL MATERIALS, LABOR, FALSEWORK, EQUIPMENT, AND INCIDENTALS TO COMPLETE THE WORK.

RETROFIT NO. 6

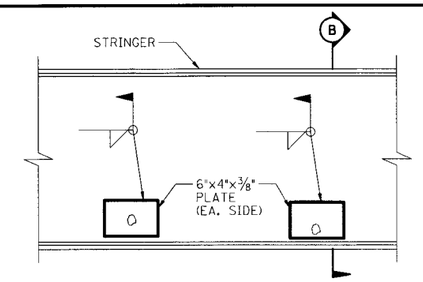

ELEVATION – HOLES IN STRINGER 3 WEB

(BETWEEN FLOORBEAMS 1 AND 2)

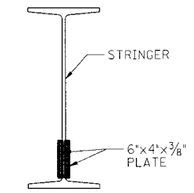

SECTION "B"

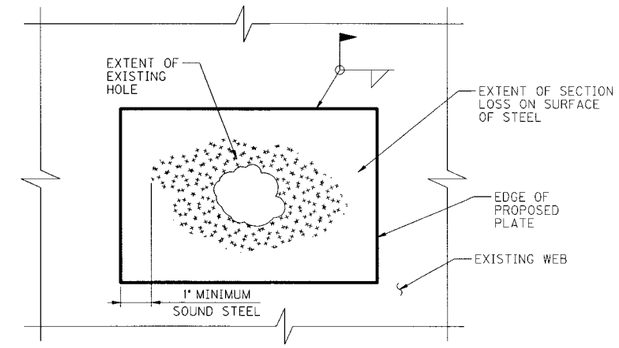

CONCEPTUAL STRINGER WEB REPAIR DETAIL

THIS WORK SHALL CONSIST OF REPAIRING OF HOLES IN STRINGER WEBS AS SHOWN IN THE PLANS OR DIRECTED BY THE ENGINEER.

AREA AT HOLE LOCATIONS SHALL BE COMPLETELY CLEANED TO BARE METAL ENSURING REMOVAL OF ALL CORRODED AND LOOSE MATERIAL PRIOR TO INSTALLING NEW PLATE.

HOLES SHALL BE GROUND SMOOTH, FREE OF NOTCHES AND SHARP REENTRANT CORNERS.

CARE SHALL BE TAKEN TO CONTAIN AND COLLECT SPENT ABRASIVES AND ANY DEBRIS RESULTING FROM THIS WORK SO THAT THE KENTUCKY RIVER IS STRICTLY PROTECTED. THE ENGINEER SHALL APPROVE THE CONTRACTOR'S CONTAINMENT / COLLECTION PLAN BEFORE THIS WORK BEGINS.

THIS WORK INCLUDES FURNISHING AND INSTALLING NEW STRUCTURAL STEEL PLATES ON EACH SIDE OF THE STRINGER WEB AT THE HOLE LOCATION.

PLATE SIZE AND SHAPE CAN VARY FROM THE DETAIL SHOWN IF NECESSARY. SEE CONCEPTUAL REPAIR DETAIL ON THIS SHEET.

SEE GENERAL NOTE SHEET FOR NOTE CONCERNING PAINTING NEW STRUCTURAL STEEL.

THE UNIT PRICE BID FOR REPAIRING EACH HOLE IN THE STRINGER WEB PLATE SHALL INCLUDE THE COST OF ALL MATERIALS, LABOR, EQUIPMENT, AND INCIDENTALS TO COMPLETE THE WORK.

RETROFIT NO. 7

ITEM NUMBER

REVISION	DATE

DATE: JANUARY 2009	CHECKED BY
DESIGNED BY: G.S. WILSON	G.S. HENDERSON
DETAILED BY: C.D. VICTORY	G.S. WILSON

Commonwealth of Kentucky
DEPARTMENT OF HIGHWAYS

COUNTY: FRANKLIN

ROUTE: ST. CLAIR STREET — CROSSING: KENTUCKY RIVER

RETROFITS NO. 6 AND NO. 7

PREPARED BY: *PALMER ENGINEERING CO.*

SHEET NO. S6

DRAWING NO. 26522

E-SHEET NAME: FILE NAME: ...\SCSB_STRINGER EXPANSION BEARING REPLACEMENT.dgn USERNAME: DATE: 3/27/2009 6:46:48 AM SHEET LOCATION:

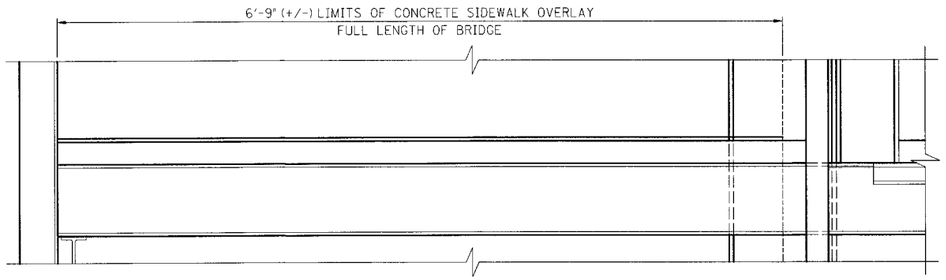

SECTION AT CROSSBEAM CHANNEL

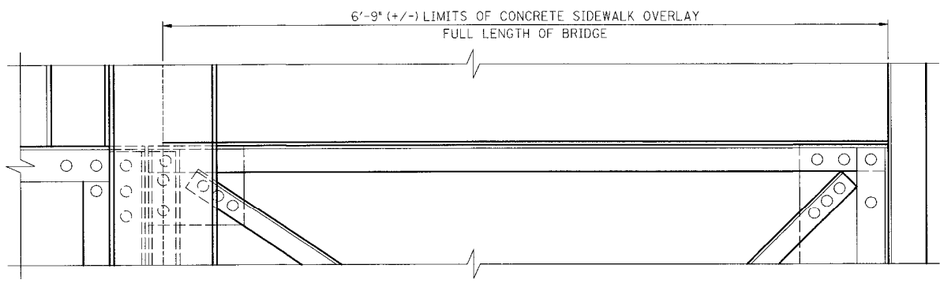

SECTION AT K-BRACE

SIDEWALK SURFACE OVERLAY

THIS WORK SHALL CONSIST OF APPLYING AN OVERLAY TO CONCRETE SIDEWALK SURFACES AS SHOWN IN THE PLANS OR DIRECTED BY THE ENGINEER.

THE CONTRACTOR SHALL REPAIR ANY DAMAGE TO THE SIDEWALK'S SURFACES, AS A RESULT OF HIS OPERATIONS, TO THE COMPLETE SATISFACTION OF THE ENGINEER. THIS WORK SHALL BE INCIDENTAL TO THIS CONTRACT.

SIDEWALK CONCRETE SURFACES SHALL BE CLEANED ENSURING REMOVAL OF ALL LOOSE AND DETERIORATED MATERIALS (INCLUDING DELAMINATED CONCRETE AND SURFACE RUST ON THE STEEL GRID) AND OVERLAYED IN ACCORDANCE WITH THE MANUFACTURER'S SPECIFICATIONS WITHIN LIMITS SHOWN IN THE PLANS.

CARE SHALL BE TAKEN TO CONTAIN AND COLLECT SPENT ABRASIVES AND ANY DEBRIS RESULTING FROM THIS WORK SO THAT THE KENTUCKY RIVER IS STRICTLY PROTECTED. THE ENGINEER SHALL APPROVE THE CONTRACTOR'S CONTAINMENT / COLLECTION PLAN BEFORE THIS WORK BEGINS.

THE CONTRACTOR SHALL FURNISH AND INSTALL FLEXOGRID, MARK-163, WITH WHITE STONE AGGREGATE AS MANUFACTURED BY POLY-CARB, INC. OF SOLON, OHIO OR AN APPROVED EQUAL. A MANUFACTURER'S REPRESENTATIVE SHALL BE ON-SITE DURING THE COMPLETION OF THIS WORK.

THE CONTRACTOR SHALL APPLY SURFACE SEALER TO ONLY THE SIDEWALK SURFACES IDENTIFIED IN THE PLANS. THE SEALER SHALL BE APPLIED NEATLY SO THAT NO OVERSPRAY OR SPLATTER IS DEPOSITED ON ADJACENT STEEL, CONCRETE, OR MASONRY SURFACES NOT IDENTIFIED TO BE SEALED. ALL OVERSPRAY OR SPLATTER DEPOSITED ON SURFACES NOT IDENTIFIED TO BE SEALED SHALL BE REMOVED AND THE ORIGINAL SURFACE TEXTURE AND COLOR RESTORED AT THE CONTRACTOR'S EXPENSE.

THE UNIT PRICE BID FOR CLEANING AND SEALING CONCRETE SIDEWALK SURFACES SHALL INCLUDE THE COST OF ALL MATERIALS, LABOR, FALSEWORK, EQUIPMENT, AND INCIDENTALS TO COMPLETE THE WORK.

RETROFIT NO. 8

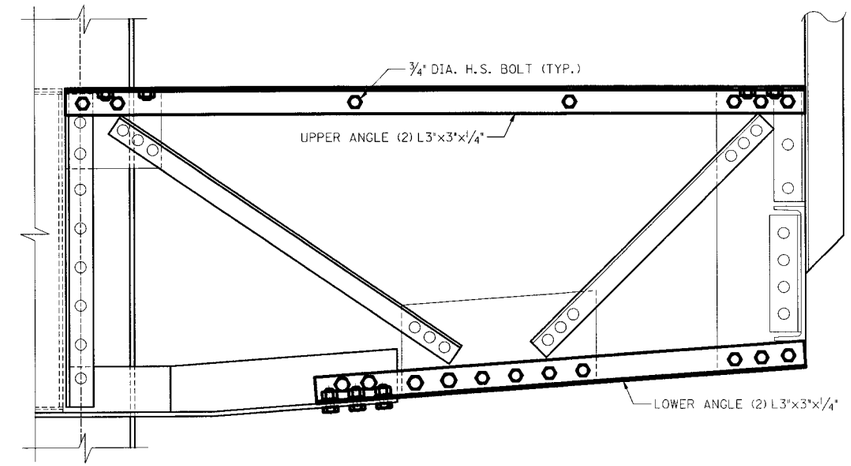

ELEVATION

SIDEWALK K-BRACE ANGLE REPAIR

THIS WORK SHALL CONSIST OF REPLACING DETERIORATED PORTIONS OF THE K-BRACES SUPPORTING THE SIDEWALK AS SHOWN IN THE PLANS OR DIRECTED BY THE ENGINEER.

ALL SURFACES TO BE ATTACHED TO NEW ANGLES SHALL BE THOROUGHLY CLEANED TO BARE METAL ENSURING REMOVAL OF ALL CORRODED AND LOOSE MATERIAL PRIOR TO PLACEMENT OF NEW CONNECTION ANGLE.

CARE SHALL BE TAKEN TO CONTAIN AND COLLECT SPENT ABRASIVES AND ANY DEBRIS RESULTING FROM THIS WORK SO THAT THE KENTUCKY RIVER IS STRICTLY PROTECTED. THE ENGINEER SHALL APPROVE THE CONTRACTOR'S CONTAINMENT / COLLECTION PLAN BEFORE THIS WORK BEGINS.

THE CONTRACTOR SHALL FIELD MEASURE THE ANGLE SIZE AND LENGTH AND DUPLICATE THE EXISTING CONNECTIONS. ALL NEW CONNECTIONS SHALL USE H.S. BOLTS.

THE CONTRACTOR IS COMPLETELY RESPONSIBLE FOR THE STABILITY OF THE STRUCTURE DURING REPAIRS.

ALL NEW STRUCTURAL STEEL SHALL BE ASTM A709, GRADE 36.

THE UNIT PRICE BID FOR K-BRACE ANGLE REPAIR SHALL INCLUDE THE COST OF ALL MATERIALS, LABOR, FALSEWORK, EQUIPMENT, AND INCIDENTALS REQUIRED TO COMPLETE THE WORK.

ANGLES TO BE REPLACED

LOCATION	WEST SIDE	EAST SIDE
L1	UPPER	UPPER
L2	UPPER	LOWER
L3	UPPER	
L4'	UPPER	
L4'	LOWER	

RETROFIT NO. 9

ITEM NUMBER

REVISION	DATE

DATE: JANUARY 2009	CHECKED BY
DESIGNED BY: G.S. WILSON	G.S. HENDERSON
DETAILED BY: C.D. VICTORY	G.S. WILSON

Commonwealth of Kentucky
DEPARTMENT OF HIGHWAYS

COUNTY: FRANKLIN

ROUTE: ST. CLAIR STREET — CROSSING: KENTUCKY RIVER

RETROFITS NO. 8 AND NO. 9

PREPARED BY: *PALMER ENGINEERING CO.*

SHEET NO. S7

DRAWING NO. 26522

E-SHEET NAME: DATE: 3/27/2009 6:46:48 AM USERNAME: FILE NAME: ...\SCSB_SIDEWALK SURFACE OVERLAY.dgn SHEET LOCATION:

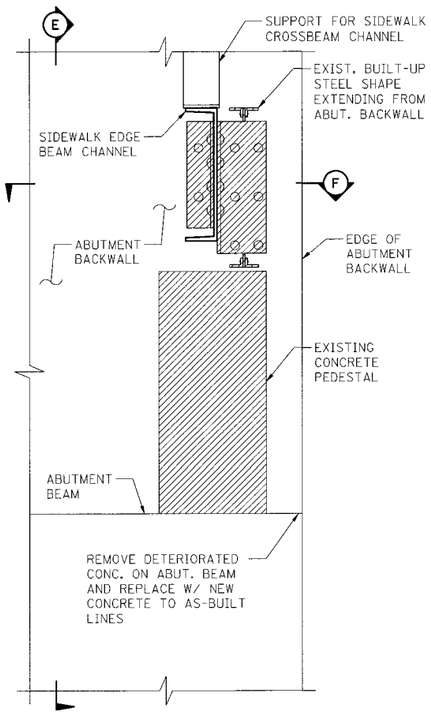

ELEVATION – ABUTMENT NO. 1 EXISTING

(LOOKING BACK, SOUTH ABUTMENT, WEST END)

▨ DENOTES TO BE REMOVED

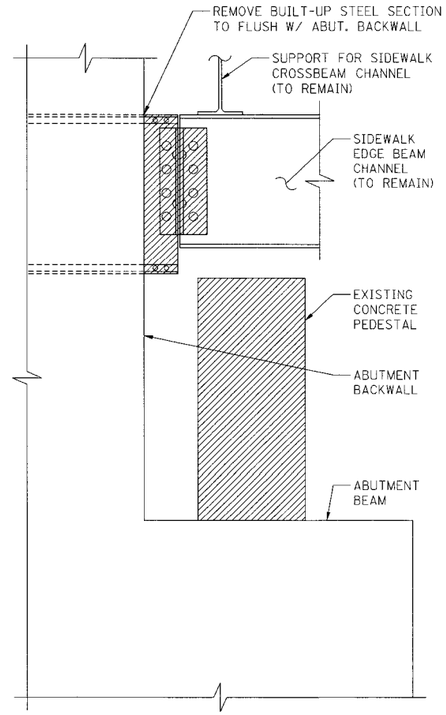

SECTION "E"

▨ DENOTES TO BE REMOVED

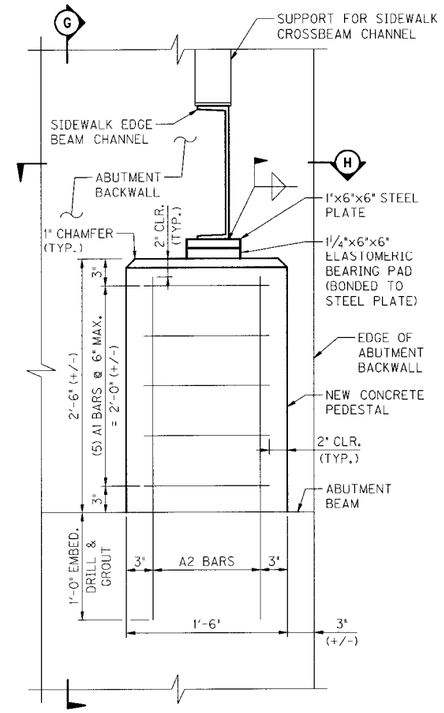

ELEVATION – ABUTMENT NO. 1 PROPOSED

(LOOKING BACK, SOUTH ABUTMENT, WEST END)

NOTE: VERTICAL DIMENSIONS SHOWN ARE APPROXIMATE & SHALL BE FIELD VERIFIED.

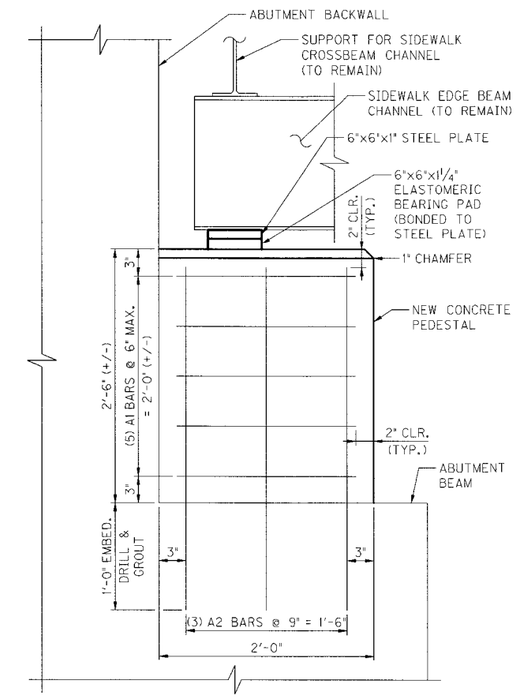

SECTION "G"

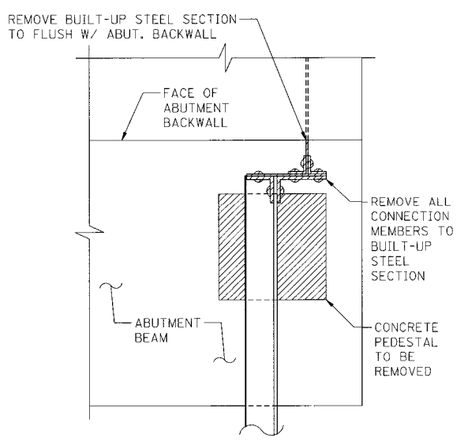

SECTION "F"

▨ DENOTES TO BE REMOVED

SIDEWALK EDGE BEAM CHANNEL SUPPORT REPAIR

THIS WORK SHALL CONSIST OF REMOVING EXISTING CONCRETE PEDESTAL AND A PORTION OF THE BUILT-UP STEEL SECTION. THE EXISTING CONDITION IS TO BE REPLACED WITH AN ELASTOMERIC BEARING BONDED TO A STEEL PLATE. THE FOLLOWING ITEMS SHALL BE INCLUDED FOR THIS WORK: REMOVAL OF PORTION OF EXISTING STRUCTURE AND FURNISHING AND INSTALLING CONCRETE PEDESTAL, ELASTOMERIC BEARING, AND STRUCTURAL STEEL.

THE CONTRACTOR IS COMPLETELY RESPONSIBLE FOR THE STABILITY OF THE STRUCTURE DURING REPAIRS.

REMOVE BUILT-UP STEEL SECTION (APPROX. 6" LONG) TO FLUSH WITH ABUTMENT BACKWALL. ALSO REMOVE CONNECTING PLATES, ANGLES, RIVETS, AND BOLTS.

ALL AREAS OF EXISTING STEEL TO REMAIN SHALL BE CLEANED AND PREPARED PER SPECIFICATIONS PRIOR TO INSTALLING NEW STRUCTURAL STEEL OR NEW ELASTOMERIC BEARINGS.

CARE SHALL BE TAKEN TO CONTAIN AND COLLECT SPENT ABRASIVES AND ANY DEBRIS RESULTING FROM THIS WORK SO THAT THE KENTUCKY RIVER IS STRICTLY PROTECTED. THE ENGINEER SHALL APPROVE THE CONTRACTOR'S CONTAINMENT / COLLECTION PLAN BEFORE THIS WORK BEGINS.

PROPOSED CONCRETE PEDESTAL HEIGHT IS APPROXIMATE AND SHALL BE FIELD VERIFIED BY THE CONTRACTOR TO INSURE PROPER FIT WITH PROPOSED BEARING AND STRUCTURAL STEEL ELEVATIONS.

NEW CONCRETE FOR PROPOSED CONCRETE PEDESTALS SHALL BE CLASS "AA" CONCRETE. NO LOADING, INCLUDING BEARINGS AND STRUCTURAL STEEL, SHALL BE PERMITTED UNTIL THE CONCRETE HAS ATTAINED A COMPRESSIVE STRENGTH OF 3000 P.S.I.

ALL NEW STEEL REINFORCEMENT SHALL BE EPOXY COATED.

EPOXY FOR REBAR DOWELS SHALL MEET THE REQUIREMENTS OF SECTION 811 OF THE SPECIFICATIONS.

THE ELASTOMER USED FOR THE FABRICATION OF THE BEARING PADS SHALL BE 60 DUROMETER.

NEW STRUCTURAL STEEL SHALL BE ASTM A709, GRADE 36.

CONTRACTOR SHALL FIELD VERIFY DIMENSIONS AND MEMBER SIZES BEFORE BEGINNING FABRICATION.

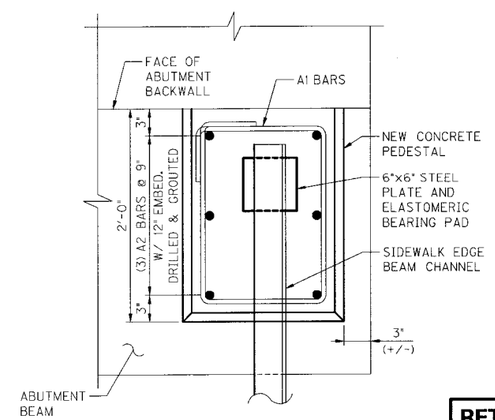

SECTION "H"

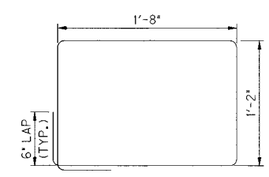

A1 BAR

(BAR SIZE IS #4)

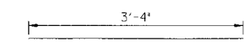

A2 BAR

(BAR SIZE IS #4)

NOTE: VERIFY LENGTH PRIOR TO ORDERING AND FABRICATION.

REVISION	DATE

DATE: JANUARY 2009	CHECKED BY
DESIGNED BY: G.S. WILSON	G.S. HENDERSON
DETAILED BY: C.D. VICTORY	G.S. WILSON

Commonwealth of Kentucky
DEPARTMENT OF HIGHWAYS

COUNTY: **FRANKLIN**

ROUTE: **ST. CLAIR STREET** | CROSSING: **KENTUCKY RIVER**

RETROFIT NO. 10

RETROFIT NO. 10

ITEM NUMBER

PREPARED BY: ***PALMER ENGINEERING CO.***

SHEET NO. S8

DRAWING NO. 26522

E-SHEET NAME: FILE NAME: ...\SCSB_SIDEWALK EDGE BEAM CHANNEL SUPPORT REPAIR.dgn SHEET LOCATION:

DATE: 3/27/2009 6:46:49 AM USERNAME:

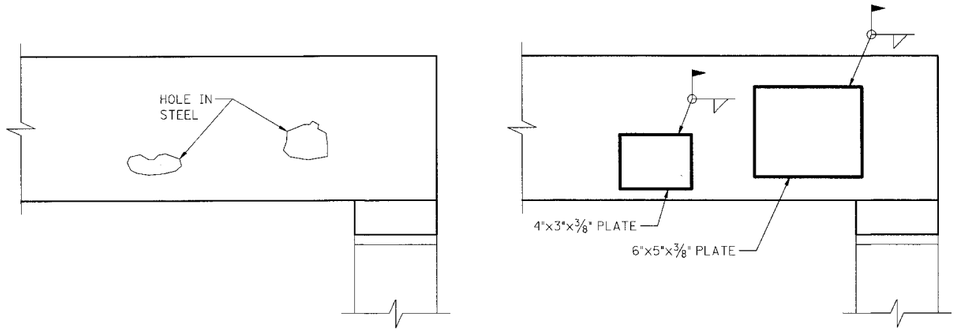

EXISTING PROPOSED

ELEVATION – CROSSBEAM CHANNEL AT ABUTMENT 1

(WEST SIDE - LOOKING SOUTH)

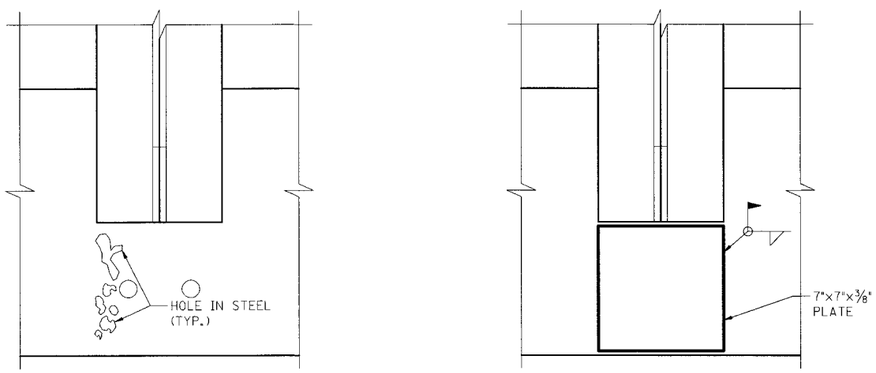

EXISTING PROPOSED

ELEVATION – SIDEWALK EAST EDGE BEAM CHANNEL

(NEAR ABUTMENT 1 EAST)

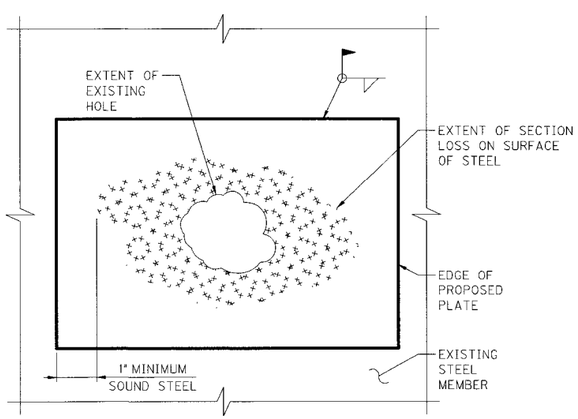

CONCEPTUAL REPAIR DETAIL

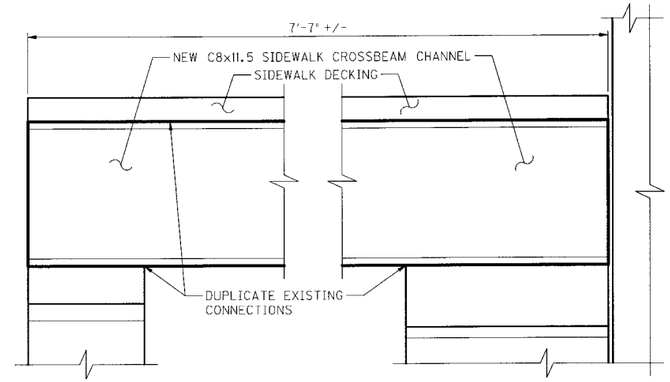

ABUTMENT 1 (EAST)

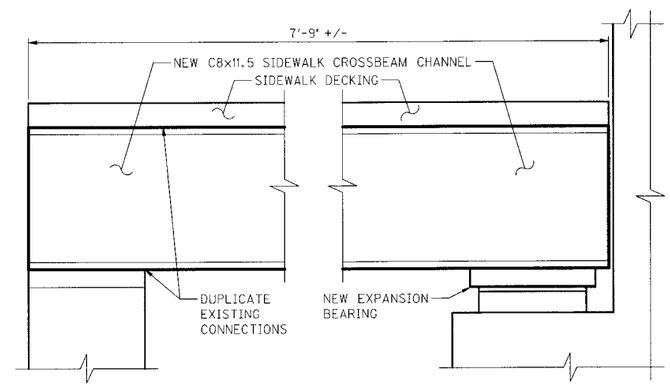

ABUTMENT 2 (WEST)

SIDEWALK CROSSBEAM CHANNEL REPLACEMENT

THIS WORK SHALL CONSIST OF REPLACING SIDEWALK CROSSBEAM CHANNELS (ESTIMATED 2 TOTAL LOCATIONS) AS SHOWN IN THE PLANS OR DIRECTED BY THE ENGINEER.

ALL SURFACES TO BE ATTACHED TO NEW CHANNEL SHALL BE THOROUGHLY CLEANED AND PREPARED PER SPECIFICATIONS PRIOR TO PLACEMENT OF NEW STRINGER.

CARE SHALL BE TAKEN TO CONTAIN AND COLLECT SPENT ABRASIVES AND ANY DEBRIS RESULTING FROM THIS WORK SO THAT THE KENTUCKY RIVER IS STRICTLY PROTECTED. THE ENGINEER SHALL APPROVE THE CONTRACTOR'S CONTAINMENT / COLLECTION PLAN BEFORE THIS WORK BEGINS.

ALL NEW STRUCTURAL STEEL SHALL BE ASTM A709, GRADE 36.

THE CONTRACTOR IS COMPLETELY RESPONSIBLE FOR THE STABILITY OF THE STRUCTURE DURING REPAIRS.

THE CONTRACTOR SHALL FIELD MEASURE CHANNEL LENGTH, SLOPE, CROSSBEAM BEARING ELEVATION, AND DUPLICATE CONNECTIONS.

THE UNIT PRICE BID FOR EACH CROSSBEAM CHANNEL REPLACEMENT SHALL INCLUDE THE COST OF ALL MATERIALS, LABOR, FALSEWORK, EQUIPMENT, AND INCIDENTALS TO COMPLETE THE WORK.

RETROFIT NO. 12

SIDEWALK CHANNEL REPAIR

THIS WORK SHALL CONSIST OF REPAIRING OF HOLES IN CHANNEL WEBS AS SHOWN IN THE PLANS OR DIRECTED BY THE ENGINEER.

AREA AT HOLE LOCATIONS SHALL BE COMPLETELY CLEANED PER SPECIFICATIONS PRIOR TO INSTALLING NEW PLATE.

HOLES SHALL BE GROUND SMOOTH, FREE OF NOTCHES AND SHARP REENTRANT CORNERS.

CARE SHALL BE TAKEN TO CONTAIN AND COLLECT SPENT ABRASIVES AND ANY DEBRIS RESULTING FROM THIS WORK SO THAT THE KENTUCKY RIVER IS STRICTLY PROTECTED. THE ENGINEER SHALL APPROVE THE CONTRACTOR'S CONTAINMENT / COLLECTION PLAN BEFORE THIS WORK BEGINS.

THIS WORK INCLUDES FURNISHING AND INSTALLING A NEW STRUCTURAL STEEL PLATE ON THE CHANNEL WEB AT THE HOLE LOCATION.

PLATE SIZE AND SHAPE CAN VARY FROM THE DETAIL SHOWN IF NECESSARY. SEE CONCEPTUAL REPAIR DETAIL ON THIS SHEET.

THE UNIT PRICE BID FOR REPAIRING EACH HOLE IN THE FLOORBEAM WEB PLATE SHALL INCLUDE THE COST OF ALL MATERIALS, LABOR, EQUIPMENT, AND INCIDENTALS TO COMPLETE THE WORK.

RETROFIT NO. 11

ITEM NUMBER

REVISION	DATE

DATE: JANUARY 2009	CHECKED BY
DESIGNED BY: G.S. WILSON	G.S. HENDERSON
DETAILED BY: C.D. VICTORY	G.S. WILSON

Commonwealth of Kentucky
DEPARTMENT OF HIGHWAYS

COUNTY: FRANKLIN

ROUTE: ST. CLAIR STREET | CROSSING: KENTUCKY RIVER

RETROFITS NO. 11 AND NO. 12

PREPARED BY: *PALMER ENGINEERING CO.*

SHEET NO. S9

DRAWING NO. 26522

SHEET LOCATION:
FILE NAME: ...\SCSB_SIDEWALK CHANNEL REPAIR.dgn
USERNAME:
DATE: 3/27/2009 6:46:50 AM
E-SHEET NAME:

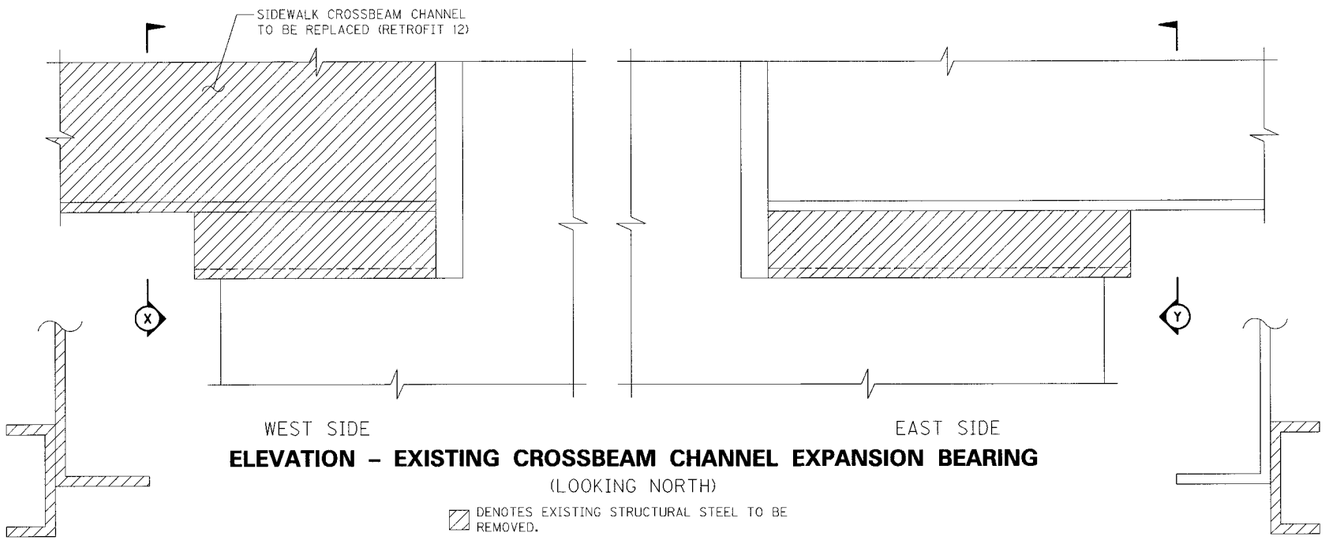

ELEVATION – EXISTING CROSSBEAM CHANNEL EXPANSION BEARING

(LOOKING NORTH)

DENOTES EXISTING STRUCTURAL STEEL TO BE REMOVED.

SECTION "X"

SECTION "Y"

SIDEWALK CROSSBEAM CHANNEL EXPANSION BEARING REPLACEMENT

THIS WORK SHALL CONSIST OF REMOVING EXISTING STEEL SIDEWALK CROSSBEAM CHANNEL BEARINGS AND REPLACING WITH SLIDING BEARINGS AS SHOWN IN THE PLANS OR DIRECTED BY THE ENGINEER.

ALL SURFACES TO BE ATTACHED TO NEW BEARING SHALL BE THOROUGHLY CLEANED AND PREPARED PER SPECIFICATIONS PRIOR TO PLACEMENT OF NEW BEARING.

ALL DETERIORATED CONCRETE ON THE CONCRETE BEARING SURFACE SHALL BE REMOVED AND REPLACED TO AS-BUILT LINES (COST TO BE INCLUDED UNDER A SEPARATE RETROFIT BID ITEM).

CARE SHALL BE TAKEN TO CONTAIN AND COLLECT SPENT ABRASIVES AND ANY DEBRIS RESULTING FROM THIS WORK SO THAT THE KENTUCKY RIVER IS STRICTLY PROTECTED. THE ENGINEER SHALL APPROVE THE CONTRACTOR'S CONTAINMENT / COLLECTION PLAN BEFORE THIS WORK BEGINS.

IN ORDER TO PLACE NEW BEARINGS AS SHOWN, TEMPORARY SUPPORT MAY BE REQUIRED. THE CONTRACTOR IS COMPLETELY RESPONSIBLE FOR THE STABILITY OF THE STRUCTURE DURING REPAIRS.

ENSURE THAT BEARINGS (TOP AND BOTTOM) ARE IN FULL CONTACT UNDER DEAD LOAD ONLY CONDITIONS.

THE ELASTOMERIC PAD THICKNESS SHALL BE SIZED TO ENSURE REQUIRED BEARING HEIGHT.

THE BEARINGS ARE TO BE POSITIONED SO THAT THE LOWER PLATE IS UNDER UNIFORM LOAD THROUGHOUT THE MOVEMENT OF THE BEARING AND THAT FOREIGN MATTER DOES NOT COLLECT ON THE LOWER ELEMENT.

NEW STAINLESS STEEL SHALL BE SERIES 300 AND SHALL HAVE AN ANSI 125 OR SMOOTHER FINISH.

NEW STRUCTURAL STEEL PLATES SHALL BE ASTM A709, GRADE 36.

THE UNIT PRICE BID FOR REPLACING EACH EXPANSION BEARING SHALL INCLUDE THE COST OF ALL MATERIALS, LABOR, FALSEWORK, EQUIPMENT, AND INCIDENTALS TO COMPLETE THE WORK.

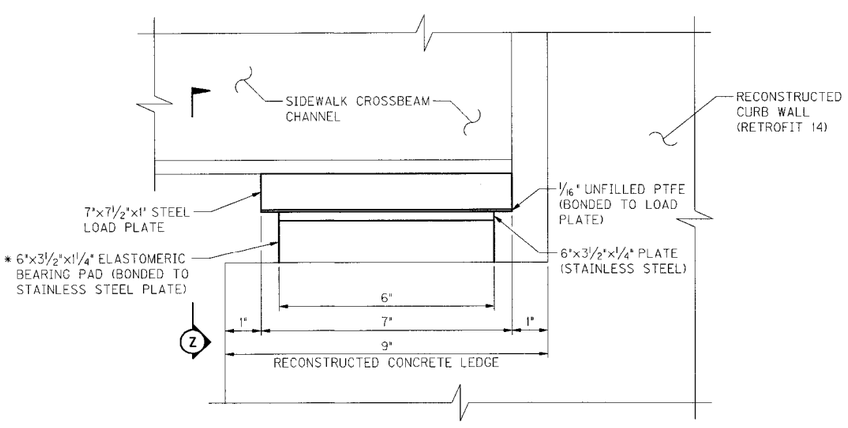

ELEVATION – CROSSBEAM CHANNEL EXPANSION BEARING

(LOOKING NORTH) - (WEST SIDE SHOWN, EAST SIDE OPPOSITE HAND)
TWO LOCATIONS AT ABUTMENT 2 (NORTH ABUTMENT)

* THICKNESS OF ELASTOMERIC PAD IS APPROXIMATE AND SHALL BE COORDINATED WITH ELEVATION OF RECONSTRUCTED CONCRETE LEDGE.

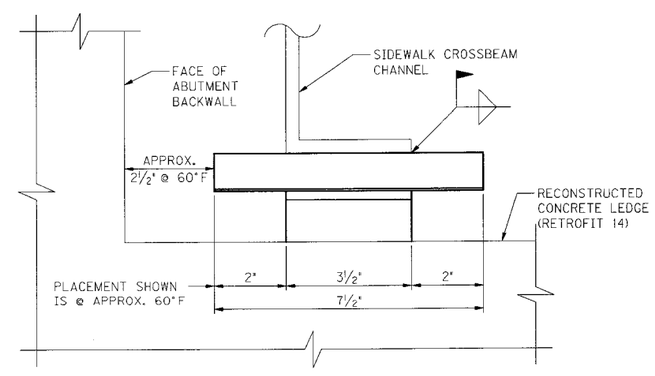

SECTION "Z"

REVISION	DATE

DATE: JANUARY 2009	CHECKED BY
DESIGNED BY: G.S. WILSON	G.S. HENDERSON
DETAILED BY: C.D. VICTORY	G.S. WILSON

Commonwealth of Kentucky
DEPARTMENT OF HIGHWAYS

COUNTY: **FRANKLIN**

ROUTE: **ST. CLAIR STREET** | CROSSING: **KENTUCKY RIVER**

RETROFIT NO. 13

RETROFIT NO. 13

ITEM NUMBER

PREPARED BY: ***PALMER ENGINEERING CO.***

SHEET NO. **S10**

DRAWING NO. **26522**

FILE NAME: ...\SCSB_SIDEWALK CROSS BEAM CHANNEL EXPANSION BEARING REPLACEMENT.dgn USERNAME: DATE: 3/27/2009 6:46:50 AM SHEET LOCATION: E-SHEET NAME:

E-SHEET NAME: DATE: 3/27/2009 6:46:51 AM USERNAME: FILE NAME: ...\SCSB_CONCRETE CURB AND SIDEWALK CONCRETE CURB AND SIDEWALK CROSS SHEET LOCATION: REPAIR.dgn

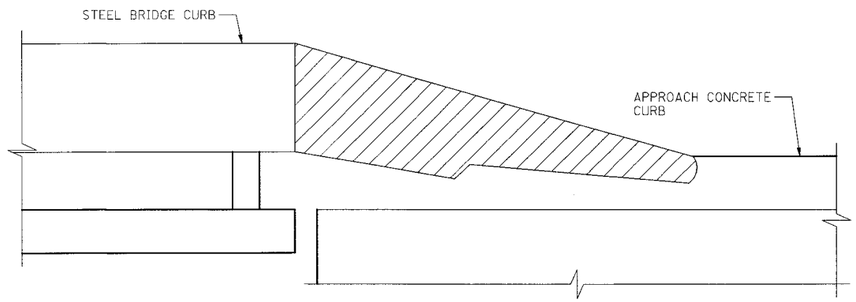

ELEVATION – EXISTING

(WEST SIDE SHOWN, EAST SIDE SIMILAR)

DENOTES EXISTING STEEL CURBING TO BE REMOVED.

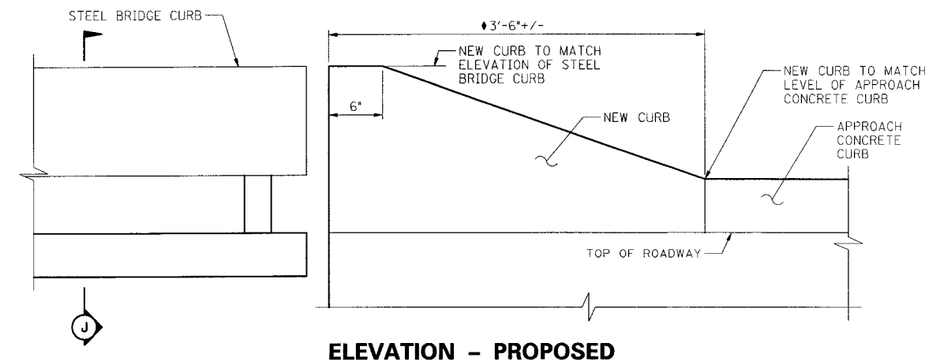

ELEVATION – PROPOSED

(WEST SIDE SHOWN, EAST SIDE SIMILAR)

♦EAST SIDE IS APPROXIMATELY 5'-6".

DIMENSIONS ARE APPROXIMATE AND SHALL BE FIELD VERIFIED.

CONCRETE CURB AND SIDEWALK CROSSBEAM SUPPORT REPAIR

THIS WORK SHALL CONSIST OF REPAIRING DETERIORATED PORTIONS OF CONCRETE FOR SIDEWALK CROSSBEAM CHANNEL SUPPORT AND CURB AT ABUTMENT NO. 2 (NORTH ABUTMENT) AS SHOWN IN THE PLANS OR DIRECTED BY THE ENGINEER.

QUANTITIES GIVEN ARE APPROXIMATE. THIS WORK SHALL BE BID WITH THE CONTINGENCY THAT QUANTITIES MAY BE INCREASED OR DECREASED BY THE ENGINEER.

EXTREME CARE SHALL BE TAKEN WHEN REMOVING THE EXISTING DETERIORATED CONCRETE SO AS NOT TO DAMAGE THE EXISTING REINFORCING STEEL. ALL EXPOSED EXISTING REINFORCING STEEL SHALL RECEIVE A COMPLETE CLEANING TO REMOVE ALL RUST. ALL EXISTING SOUND REINFORCEMENT SHALL REMAIN IN PLACE. ANY DETERIORATED OR DAMAGED REINFORCING STEEL SHALL BE REPLACED OR SUPPLEMENTED AS DIRECTED BY THE ENGINEER AND IN ACCORDANCE WITH SECTION 602 OF THE STANDARD SPECIFICATIONS.

THE CONTRACTOR SHALL BE SOLELY RESPONSIBLE FOR THE STABILITY OF THE STRUCTURE DURING REPAIRS.

THE SURFACES OF ALL AREAS WHICH ARE TO BE IN CONTACT WITH THE CONCRETE SHALL BE BLAST CLEANED UNTIL THESE SURFACES ARE FREE FROM ALL DUST, DIRT, OIL, GREASE, AND ANY OTHER FOREIGN MATTER. ALL BLAST CLEANING SHALL BE DONE WITHIN TWELVE (12) HOURS PRIOR TO THE PLACEMENT OF THE NEW CONCRETE.

CARE SHALL BE TAKEN TO CONTAIN AND COLLECT SPENT ABRASIVES AND ANY DEBRIS RESULTING FROM THIS WORK SO THAT THE KENTUCKY RIVER IS STRICTLY PROTECTED. THE ENGINEER SHALL APPROVE THE CONTRACTOR'S CONTAINMENT / COLLECTION PLAN BEFORE THIS WORK BEGINS.

POWER DRIVEN HAND TOOLS USED FOR REMOVAL OF UNSOUND CONCRETE ARE SUBJECT TO THE FOLLOWING RESTRICTIONS:
1. PNEUMATIC HAMMERS HEAVIER THAN THE 35 LB. CLASS SHALL NOT BE USED.
2. CHIPPING HAMMERS OF THE 15 LB. CLASS SHALL BE USED TO REMOVE CONCRETE FROM BEHIND REINFORCING STEEL.

PROPOSED CONCRETE PEDESTAL HEIGHTS ARE APPROXIMATE AND SHALL BE FIELD VERIFIED BY THE CONTRACTOR TO INSURE PROPER FIT WITH PROPOSED ELASTOMERIC BEARING PADS AND STRUCTURAL STEEL ELEVATIONS.

NEW CONCRETE FOR SIDEWALK CROSSBEAM SUPPORT AND CURB SHALL BE CLASS "AA" CONCRETE. NO LOADING, INCLUDING BEARINGS AND STRUCTURAL STEEL, SHALL BE PERMITTED UNTIL THE CONCRETE HAS ATTAINED A COMPRESSIVE STRENGTH OF 3000 P.S.I.

ALL NEW STEEL REINFORCEMENT SHALL BE EPOXY COATED.

THE UNIT PRICE BID FOR THIS RETROFIT SHALL INCLUDE THE COST OF ALL MATERIALS, LABOR, FALSEWORK, EQUIPMENT, AND INCIDENTALS TO COMPLETE THE WORK.

COORDINATE THIS WORK WITH SIDEWALK CROSSBEAM CHANNEL EXPANSION BEARING REPLACEMENT AND EXPANSION JOINT REPLACEMENTS.

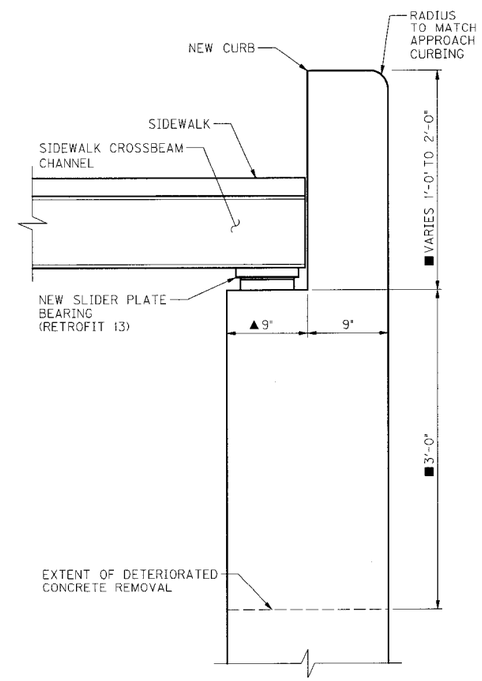

SECTION "J"

(WEST SIDE SHOWN, EAST SIDE SIMILAR)

▲PER EXISTING PLANS, EAST SIDE CONCRETE LEDGE = 1'-1½".

■VERTICAL DIMENSIONS ARE APPROXIMATE AND ARE DEPENDENT UPON EXTENT OF DETERIORATED CONCRETE REMOVAL.

AMOUNT OF CONCRETE TO BE REMOVED SHALL MEET WITH THE APPROVAL OF THE ENGINEER.

REVISION	DATE

DATE: JANUARY 2009	CHECKED BY
DESIGNED BY: G.S. WILSON	G.S. HENDERSON
DETAILED BY: C.D. VICTORY	G.S. WILSON

Commonwealth of Kentucky
DEPARTMENT OF HIGHWAYS

COUNTY: FRANKLIN

ROUTE: ST. CLAIR STREET | CROSSING: KENTUCKY RIVER

RETROFIT NO. 14

ITEM NUMBER

RETROFIT NO. 14

PREPARED BY: PALMER ENGINEERING CO.

SHEET NO. S11

DRAWING NO. 26522

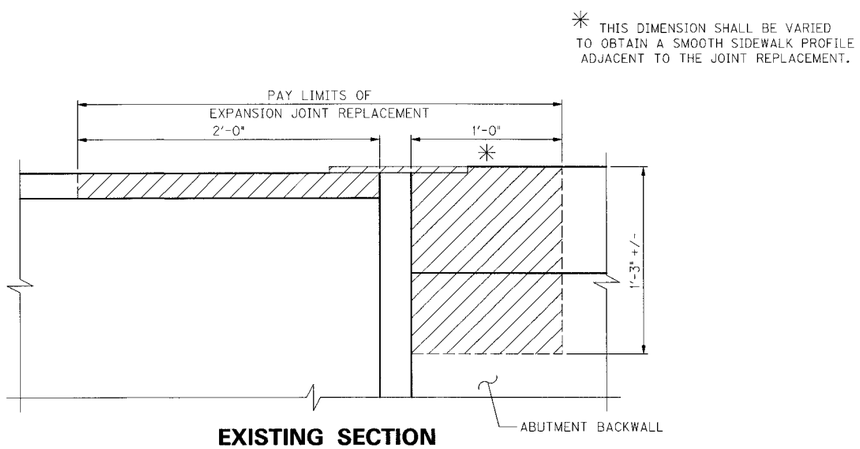

EXISTING SECTION

(JOINT THROUGH SIDEWALK)

DENOTES AREAS TO BE REMOVED.

EXISTING REINFORCING STEEL SHALL BE CLEANED AND LEFT IN PLACE.

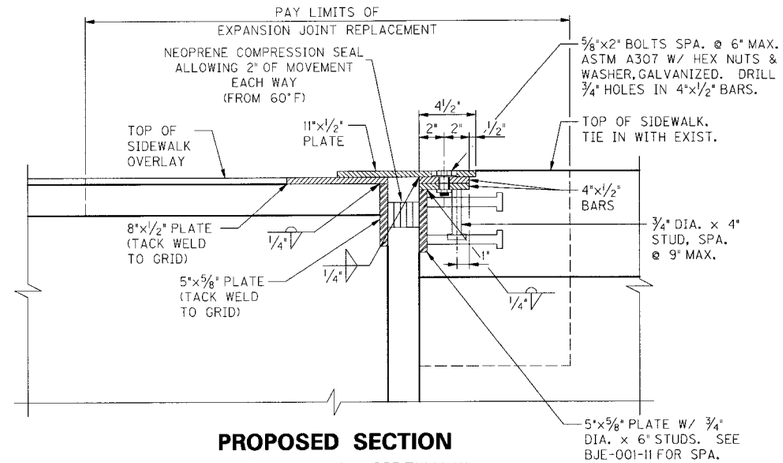

PROPOSED SECTION

(JOINT THROUGH SIDEWALK)

EXPANSION JOINT REPLACEMENT (SIDEWALK)

THIS WORK CONSISTS OF REMOVING THE EXISTING STEEL PLATE JOINT AND ATTACHMENTS AND REPLACING WITH STEEL SLIDER PLATE JOINT AND NEOPRENE COMPRESSION SEAL.

NEW CONCRETE FOR STEEL GRID DECK AND ABUTMENT BACKWALL SHALL BE CLASS M. LOADS SHALL NOT BE PERMITTED ON THE NEWLY PLACED CONCRETE UNTIL IT HAS CURED FOR A MINIMUM OF 48 HOURS.

ALL NEW STRUCTURAL STEEL SHALL BE COMMERCIAL GRADE STEEL SUITABLE FOR WELDING. THE ENGINEER WILL BASE ACCEPTANCE ON VISUAL INSPECTION. SEE STANDARD DRAWING BJE-001-11.

THE ARMORED EDGE STUD ANCHORS ARE EMBEDDED CONNECTORS CONFORMING TO ASTM A108, GRADE 1015 (NELSON STUDS OR EQUAL).

ANY REQUIRED NEW REINFORCEMENT SHALL BE EPOXY COATED STEEL REINFORCEMENT, GRADE 60.

BLAST CLEAN ALL AREAS OF EXISTING CONCRETE AND STRUCTURAL STEEL TO COME IN CONTACT WITH NEW CONCRETE UNTIL FREE OF ALL LAITANCE AND DELETERIOUS SUBSTANCES IMMEDIATELY PRIOR TO THE PLACEMENT OF THE CLASS "M" CONCRETE. THE SURFACE AREAS OF EXISTING CONCRETE TO COME IN CONTACT WITH THE NEW CLASS "M" CONCRETE ARE TO BE COATED WITH AN EPOXY BOND COAT IMMEDIATELY PRIOR TO PLACING NEW CONCRETE IN ACCORDANCE WITH SECTION 511. THE INTERFACES OF THE NEW AND OLD CONCRETE SHALL BE AS NEARLY VERTICAL AND HORIZONTAL AS POSSIBLE.

CARE SHALL BE TAKEN TO CONTAIN AND COLLECT SPENT ABRASIVES AND ANY DEBRIS RESULTING FROM THIS WORK SO THAT THE KENTUCKY RIVER IS STRICTLY PROTECTED. THE ENGINEER SHALL APPROVE THE CONTRACTOR'S CONTAINMENT / COLLECTION PLAN BEFORE THIS WORK BEGINS.

SHOP DRAWINGS WILL NOT BE REQUIRED. THE CONTRACTOR IS RESPONSIBLE FOR OBTAINING FIELD MEASUREMENTS AND SUPPLYING PROPERLY SIZED MATERIALS TO COMPLETE THE WORK.

THE UNIT PRICE BID FOR THIS RETROFIT SHALL INCLUDE ALL LABOR, MATERIALS, TOOLS, AND EQUIPMENT AND INCIDENTALS REQUIRED TO COMPLETE THE WORK.

REVISION	DATE

DATE: JANUARY 2009	CHECKED BY
DESIGNED BY: G.S. WILSON	G.S. HENDERSON
DETAILED BY: C.D. VICTORY	G.S. WILSON

Commonwealth of Kentucky
DEPARTMENT OF HIGHWAYS

COUNTY: **FRANKLIN**

ROUTE: **ST. CLAIR STREET** | CROSSING: **KENTUCKY RIVER**

RETROFIT NO. 15

RETROFIT NO. 15

ITEM NUMBER

PREPARED BY: *PALMER ENGINEERING CO.*

SHEET NO. S12

DRAWING NO. 26522

E-SHEET NAME: DATE: 3/27/2009 6:46:51 AM USERNAME: FILE NAME: ...\SCSB_EXPANSION JOINT REPLACEMENT (SIDEWALK).dgn SHEET LOCATION:

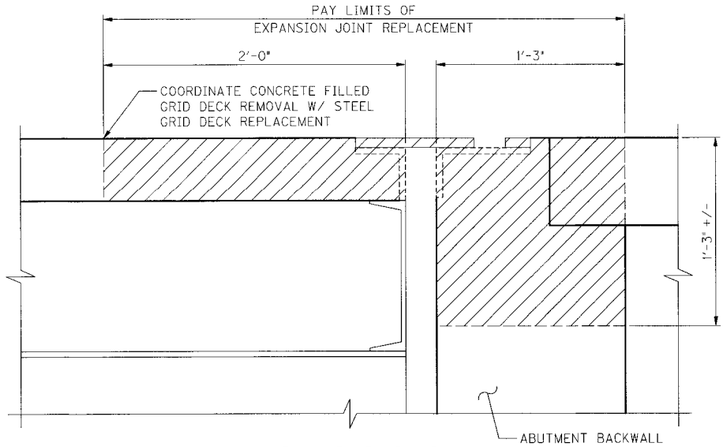

EXISTING SECTION

(JOINT THROUGH ROADWAY)

DENOTES AREAS TO BE REMOVED.

EXISTING REINFORCING STEEL SHALL BE CLEANED AND LEFT IN PLACE.

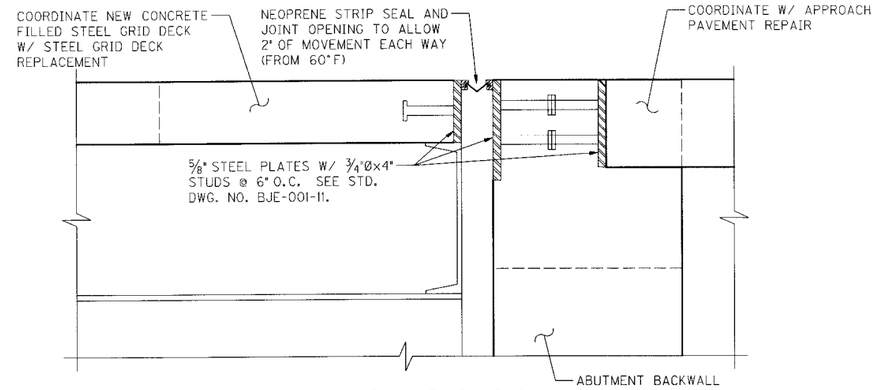

PROPOSED SECTION

(JOINT THROUGH ROADWAY)

NEW CONCRETE IN STEEL GRID DECK AND ABUTMENT BACKWALL SHALL BE CLASS "M". FOLLOW MANUFACTURER'S RECOMMENDATIONS FOR JOINT OPENING.

EXPANSION JOINT REPLACEMENT (ROADWAY)

THIS WORK CONSISTS OF REMOVING THE EXISTING STEEL SLIDER PLATE JOINT AND ATTACHMENTS AND REPLACING WITH NEW STRIP SEAL EXPANSION JOINT.

NEW CONCRETE FOR STEEL GRID DECK AND ABUTMENT BACKWALL SHALL BE CLASS M. TRAFFIC SHALL NOT BE PERMITTED ON THE NEWLY PLACED CONCRETE UNTIL IT HAS CURED FOR A MINIMUM OF 48 HOURS.

ALL NEW STRUCTURAL STEEL SHALL BE COMMERCIAL GRADE STEEL SUITABLE FOR WELDING. THE ENGINEER WILL BASE ACCEPTANCE ON VISUAL INSPECTION. SEE STANDARD DRAWING BJE-001-11.

THE ARMORED EDGE STUD ANCHORS ARE EMBEDDED CONNECTORS CONFORMING TO ASTM A108, GRADE 1015 (NELSON STUDS OR EQUAL).

ANY REQUIRED NEW REINFORCEMENT SHALL BE EPOXY COATED STEEL REINFORCEMENT, GRADE 60.

BLAST CLEAN ALL AREAS OF EXISTING CONCRETE AND STRUCTURAL STEEL TO COME IN CONTACT WITH NEW CONCRETE UNTIL FREE OF ALL LAITANCE AND DELETERIOUS SUBSTANCES IMMEDIATELY PRIOR TO THE PLACEMENT OF THE CLASS "M" CONCRETE. THE SURFACE AREAS OF EXISTING CONCRETE TO COME IN CONTACT WITH THE NEW CLASS "M" CONCRETE ARE TO BE COATED WITH AN EPOXY BOND COAT IMMEDIATELY PRIOR TO PLACING NEW CONCRETE IN ACCORDANCE WITH SECTION 511. THE INTERFACES OF THE NEW AND OLD CONCRETE SHALL BE AS NEARLY VERTICAL AND HORIZONTAL AS POSSIBLE.

CARE SHALL BE TAKEN TO CONTAIN AND COLLECT SPENT ABRASIVES AND ANY DEBRIS RESULTING FROM THIS WORK SO THAT THE KENTUCKY RIVER IS STRICTLY PROTECTED. THE ENGINEER SHALL APPROVE THE CONTRACTOR'S CONTAINMENT / COLLECTION PLAN BEFORE THIS WORK BEGINS.

FURNISH FOR REPLACEMENT, AS DIRECTED BY THE ENGINEER, 800 LINEAR FEET OF EPOXY COATED STEEL REINFORCING BARS 1/2 INCH DIAMETER BY 20 FT LENGTHS. PLACE THESE BARS IN AREAS DEEMED BY THE ENGINEER TO REQUIRE ADDITIONAL REINFORCEMENT. FIELD CUTTING AND BENDING IS PERMITTED. DO NOT PLACE ANY ADDITIONAL STEEL REINFORCEMENT ABOVE THE HEIGHT OF THE TOP ROW OF NELSON STUDS ON THE ARMORED EDGES. ENSURE THAT ALL EXPOSED STEEL REINFORCEMENT IS INSTALLED AND TIED IN ACCORDANCE WITH SECTIONS 602.03.04 AND 602.03.05 PRIOR TO POURING THE NEW CLASS "M" CONCRETE. DELIVER UNUSED BARS TO THE LOCAL COUNTY MAINTENANCE BARN.

PLACE NEOPRENE STRIP SEALS AS RECOMMENDED BY THE MANUFACTURER AND IN ACCORDANCE WITH SECTION 609.03.04 (E), EXCEPT THAT SHOP DRAWINGS WILL NOT BE REQUIRED. THE CONTRACTOR IS RESPONSIBLE FOR OBTAINING FIELD MEASUREMENTS AND SUPPLYING PROPERLY SIZED MATERIALS TO COMPLETE THE WORK.

THE UNIT PRICE BID FOR THIS RETROFIT SHALL INCLUDE ALL LABOR, MATERIALS, TOOLS, AND EQUIPMENT AND INCIDENTALS REQUIRED TO COMPLETE THE WORK.

REVISION	DATE

DATE: JANUARY 2009	CHECKED BY
DESIGNED BY: G.S. WILSON	G.S. HENDERSON
DETAILED BY: C.D. VICTORY	G.S. WILSON

Commonwealth of Kentucky
DEPARTMENT OF HIGHWAYS

COUNTY
FRANKLIN

ROUTE: **ST. CLAIR STREET** | CROSSING: **KENTUCKY RIVER**

RETROFIT NO. 16

ITEM NUMBER

RETROFIT NO. 16

PREPARED BY
PALMER ENGINEERING CO.

SHEET NO. **S13**

DRAWING NO. **26522**

SHEET LOCATION:
FILE NAME: ...\SCSB_EXPANSION JOINT REPLACEMENT (ROADWAY).dgn
USERNAME:
DATE: 3/27/2009 6:46:52 AM
E-SHEET NAME:

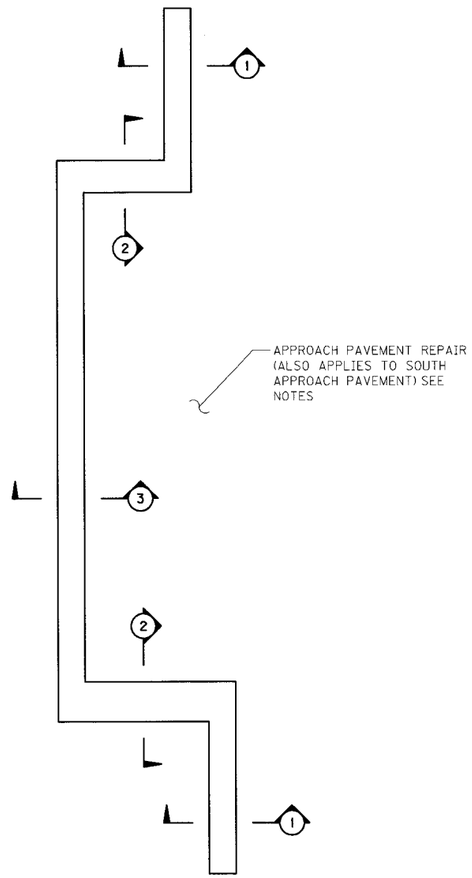

PLAN – NORTH ABUTMENT

1: (RETROFIT 15) - EXPANSION JOINT REPLACEMENT (SIDEWALK)

2: (RETROFIT 14) - CONCRETE CURB AND SIDEWALK CROSSBEAM SUPPORT REPAIR

3: (RETROFIT 16) - EXPANSION JOINT REPLACEMENT (ROADWAY)

APPROACH PAVEMENT REPAIR

THIS WORK CONSISTS OF MILLING THE EXISTING APPROACH PAVEMENT AND PLACING A NEW PAVEMENT SURFACE AT EACH END OF THE BRIDGE.

THE PAVEMENT SHALL BE CLASS 1 ASPHALT SURFACE 0.38 PG64-22 AND TACK COAT. THESE MATERIALS SHALL BE IN ACCORDANCE WITH THE STANDARD SPECIFICATIONS.

REMOVE THE EXISTING PAVEMENT MATERIAL TO PROVIDE FOR A MINIMUM OF 1¼" NEW PAVEMENT SURFACE FROM THE BRIDGE END EXTENDING APPROXIMATELY 20 FEET INTO THE APPROACH PAVEMENT AND ACROSS THE WIDTH OF THE APPROACH PAVEMENT. THE ENGINEER SHALL DETERMINE THE ACTUAL LENGTH AND WIDTH OF THE MILLING DEPENDING ON SITE CONDITIONS AT EACH BRIDGE APPROACH. MILL THE EXISTING SURFACE SO THAT THE NEW ASPHALT SURFACE WILL TIE INTO THE NEW ARMORED EDGE (ON THE NORTH APPROACH) OR THE EXISTING ABUTMENT BACKWALL (ON THE SOUTH APPROACH) AND MATCHES THE ORIGINAL CROSS SECTION OF THE APPROACH. MILL A 3-FOOT EDGE KEY TO TIE THE NEW SURFACE INTO THE EXISTING SURFACE APPROXIMATELY 20 FEET FROM THE BRIDGE END. THE ENGINEER SHALL APPROVE THE CONTRACTOR'S PLAN FOR RESTORING THE APPROACH GRADE PRIOR TO THE REMOVAL OF THE EXISTING SURFACE. DISPOSE OF ALL REMOVED MATERIAL ENTIRELY AWAY FROM THE JOB SITE OR AS DIRECTED BY THE ENGINEER.

PRODUCE AND PLACE THE NEW 1¼" ASPHALT SURFACE IN ACCORDANCE WITH SECTION 403 AND COMPACT UNDER OPTION B.

PAVEMENT STRIPING WILL BE REQUIRED TO MATCH THE EXISTING PAVEMENT STRIPING. PAVEMENT STRIPING SHALL BE IN ACCORDANCE WITH APPLICABLE SECTIONS OF THE STANDARD SPECIFICATIONS AND SHALL BE PAID FOR AS PART OF THIS RETROFIT.

PAYMENT AT THE CONTRACT UNIT PRICE PER SQUARE YARD IS FULL COMPENSATION FOR MOBILIZATION OF MILLING EQUIPMENT, REMOVING SPECIFIED EXISTING PAVEMENT MATERIAL, FURNISHING AND INSTALLING THE ASPHALT TACK COAT, PRODUCING AND PLACING THE NEW ASPHALT SURFACE, AND ALL INCIDENTAL ITEMS NECESSARY TO COMPLETE THE WORK WITHIN THE SPECIFIED PAY LIMITS AS SPECIFIED BY THIS NOTE.

COORDINATE THIS WORK WITH THE EXPANSION JOINT REPLACEMENTS AT THE NORTH END OF THE BRIDGE.

REVISION	DATE

DATE: JANUARY 2009	CHECKED BY
DESIGNED BY: G.S. WILSON	G.S. HENDERSON
DETAILED BY: C.D. VICTORY	G.S. WILSON

Commonwealth of Kentucky
DEPARTMENT OF HIGHWAYS

COUNTY: FRANKLIN

ROUTE: ST. CLAIR STREET | CROSSING: KENTUCKY RIVER

RETROFIT NO. 17

ITEM NUMBER

RETROFIT NO. 17

PREPARED BY: PALMER ENGINEERING CO.

SHEET NO. S14

DRAWING NO. 26522

E-SHEET NAME: DATE: 3/27/2009 6:46:53 AM USERNAME: FILE NAME: ...\SCSB_APPROACH PAVEMENT REPAIR.dgn SHEET LOCATION:

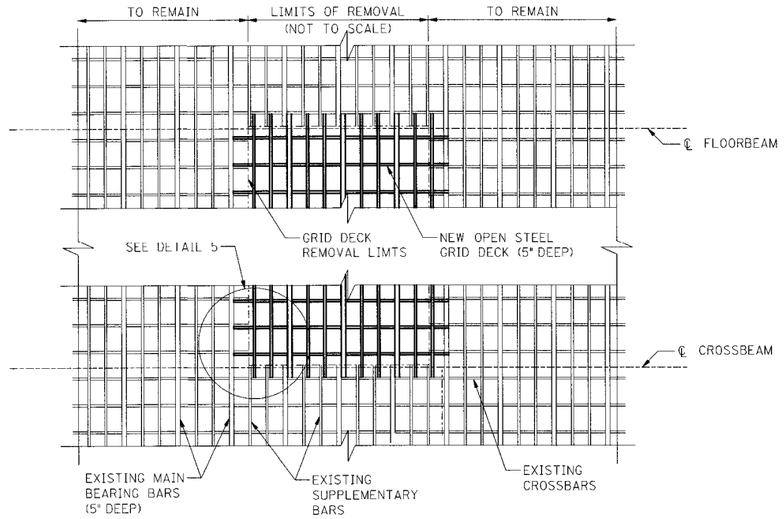

PLAN – GRID DECK REPAIR

(TYPICAL REPAIR)

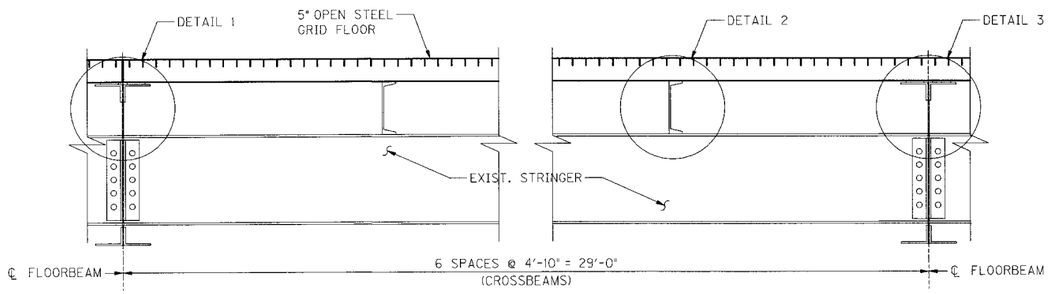

TYPICAL LONGITUDINAL SECTION

(LOOKING WEST)

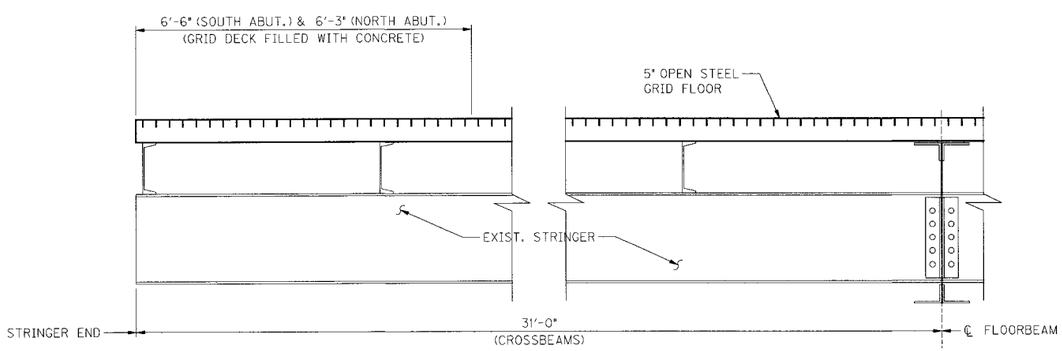

TYPICAL LONGITUDINAL SECTION BETWEEN ABUTMENT AND FIRST FLOORBEAM

(LOOKING WEST)

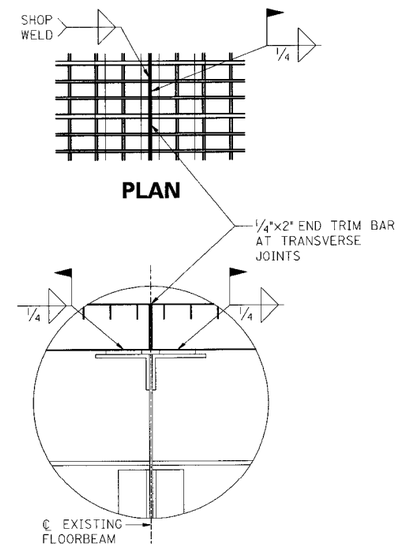

PLAN

DETAIL 1

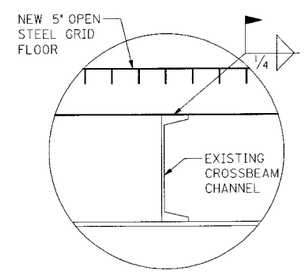

DETAIL 2

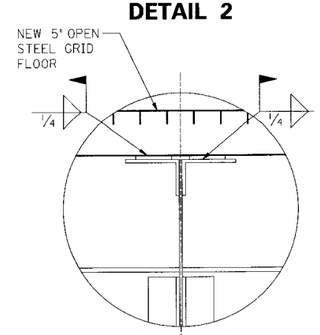

DETAIL 3

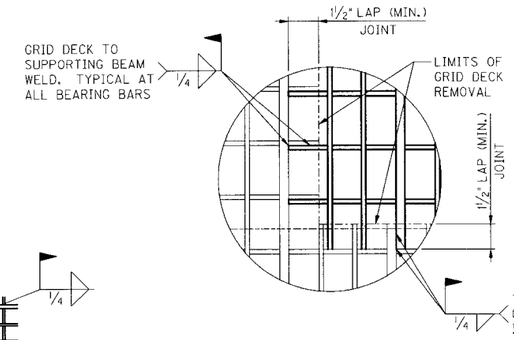

DETAIL 5

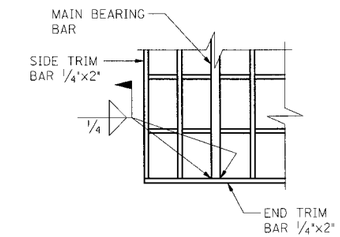

FREE EDGE TRIM BARS

GRID DECK REPAIR

THIS WORK SHALL CONSIST OF REPLACING PORTIONS OF THE EXISTING OPEN STEEL GRID BRIDGE DECK AS SHOWN IN THE PLANS OR DIRECTED BY THE ENGINEER. GRID DECK PANELS USED FOR GRID DECK REPAIR SHALL BEGIN AND END AT EITHER A FLOORBEAM OR CROSSBEAM SUPPORT.

WORK THIS SHEET WITH SHEET S16.

DIMENSIONS SHOWN ARE IN A HORIZONTAL PLANE AND FIELD DIMENSIONS WILL VARY DUE TO THE DECK CURVATURE. THE CONTRACTOR SHALL FIELD VERIFY THE DIMENSIONS SHOWN AND ADJUST THE LENGTH OF DECK GRATING REQUIRED TO FIT THE FIELD DIMENSIONS.

ANY DAMAGE TO THE BRIDGE MEMBERS SUPPORTING THE NEW STEEL GRID DECK SHALL BE REPAIRED AT THE CONTRACTOR'S EXPENSE TO THE SATISFACTION OF THE ENGINEER.

CUT EXISTING STEEL GRID DECK TO THE LIMITS SHOWN. GRIND EXISTING WELDS SMOOTH, FLUSH WITH BASE METAL ALONG TOP FLANGE OF FLOORBEAM OR CROSSBEAM, AND FREE OF NOTCHES AND SHARP REENTRANT CORNERS.

ALL SURFACES TO BE ATTACHED TO NEW OPEN STEEL GRID BRIDGE DECK SHALL BE THOROUGHLY CLEANED TO BARE METAL ENSURING REMOVAL OF ALL CORRODED AND LOOSE MATERIAL PRIOR TO PLACEMENT OF NEW OPEN STEEL GRID BRIDGE DECK.

CARE SHALL BE TAKEN TO CONTAIN AND COLLECT SPENT ABRASIVES AND ANY DEBRIS RESULTING FROM THIS WORK SO THAT THE KENTUCKY RIVER IS STRICTLY PROTECTED. THE ENGINEER SHALL APPROVE THE CONTRACTOR'S CONTAINMENT / COLLECTION PLAN BEFORE THIS WORK BEGINS.

THE WELDED OPEN STEEL GRID BRIDGE FLOORING USED FOR STEEL GRID DECK REPLACEMENT SHALL BE THE CARNEGIE 5" I-BEAM LOK OPEN FLOOR STEEL GRID OR APPROVED EQUAL AND SHALL BE INSTALLED IN ACCORDANCE WITH THE MANUFACTURER'S SPECIFICATIONS. THE FLOORING SHALL CONSIST OF PANELS FABRICATED OF A.S.T.M. A709, GRADE 36 STEEL WITH MAIN BEARING BARS 5" DEEP SPACED AT 6" C. TO C. (MAIN BEARING BARS SHALL BE PLACED PARALLEL TO TRAFFIC) WITH 3/4" × 1/4" SUPPLEMENTAL BARS SPACED BETWEEN THE MAIN BARS. THE MAIN BARS SHALL BE INTERSECTED BY CROSS BARS 1 5/8" × 1/4" SPACED AT 3" C. TO C. THE STEEL GRID DECK SHALL SUPPORT A H15 LIVE LOAD OVER A 5'-0" CONTINUOUS CLEAR SPAN. THE MAIN BARS AND CROSS BARS SHALL BE INTERLOCKED AND WELDED AT ALL JOINTS. THE TOP SURFACE SHALL BE IN THE SAME PLANE. THE OPEN STEEL GRID FLOOR SHALL BE FIELD WELDED AT EVERY INTERSECTION WITH SUPPORTING STEEL USING A 2" × 1/4" FILLET WELD AT EVERY MAIN BEARING BAR.

FOR THE CONCRETE FILLED GRID DECK REPLACEMENT, THE CONTRACTOR SHALL USE CLASS "M" CONCRETE TO FILL THE NEW GRID DECK.

THE UNIT PRICE BID FOR OPEN STEEL GRID DECK REPLACEMENT SHALL INCLUDE THE COST OF ALL MATERIALS, LABOR, FALSEWORK, EQUIPMENT, AND INCIDENTALS TO COMPLETE THE WORK.

REVISION	DATE

DATE: JANUARY 2009	CHECKED BY
DESIGNED BY: K.L. THOMPSON	G.S. WILSON
DETAILED BY: K.L. THOMPSON	G.S. WILSON

Commonwealth of Kentucky
DEPARTMENT OF HIGHWAYS

COUNTY: **FRANKLIN**

ROUTE: **ST. CLAIR STREET** | CROSSING: **KENTUCKY RIVER**

RETROFIT NO. 18

ITEM NUMBER

RETROFIT NO. 18

PREPARED BY: *PALMER ENGINEERING CO.*

SHEET NO. **S15**

DRAWING NO. **26522**

SHEET LOCATION:
FILE NAME: ...\SCSB_GRID-DECK-REPAIRS-2.dgn
USERNAME:
DATE: 3/27/2009 6:46:53 AM
E-SHEET NAME:

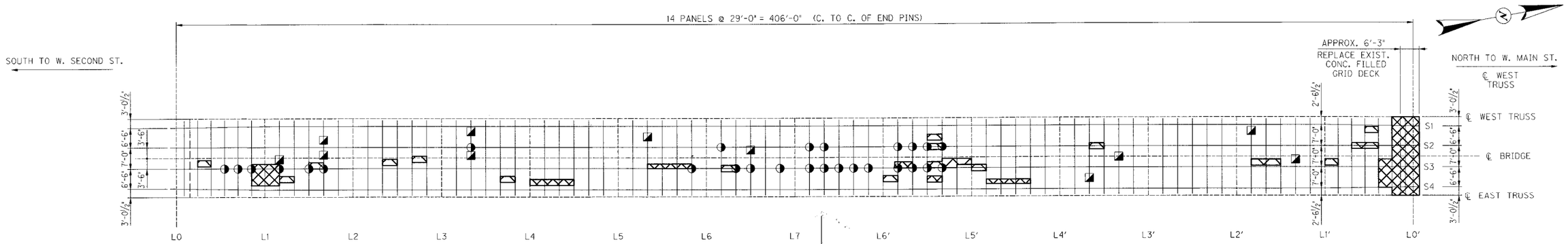

STEEL GRID DECK RETROFIT LOCATIONS

WORK THIS SHEET WITH SHEET S15.

FOR CLARITY, SIDEWALKS AND LOWER LATERAL BRACING MEMBERS ARE NOT SHOWN.

DENOTES DETERIORATED AREAS OF EXIST. STEEL GRID DECK TO BE REPLACED.

DENOTES RETROFIT NO. 19

DENOTES RETROFIT NO. 20

NOTE: SEE DETAIL SHEETS FOR RETROFIT DESCRIPTIONS. FOR REPAIRS NOT SHOWN, SEE TITLE SHEET FOR REFERENCE.

NOTE: CONCRETE FOR FILLED STEEL GRID DECK SHALL BE CLASS M. TRAFFIC SHALL NOT BE PERMITTED ON THE NEWLY PLACED CONCRETE UNTIL IT HAS CURED FOR A MINIMUM OF 48 HOURS.

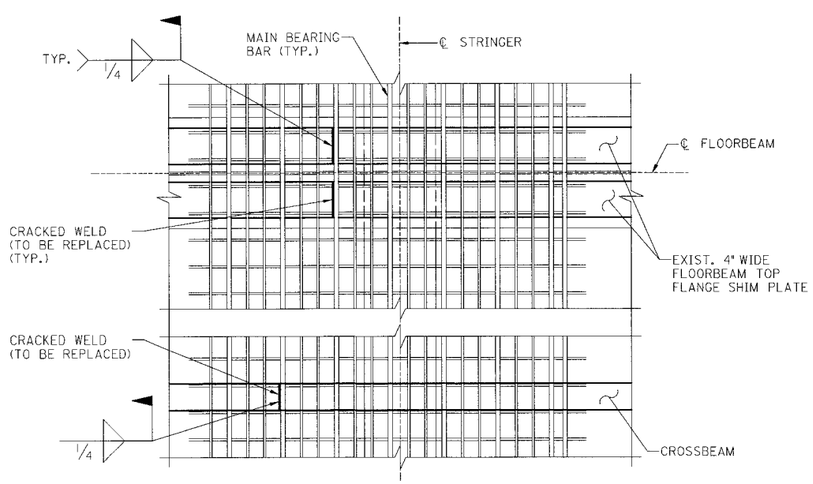

PLAN – STEEL GRID DECK

STEEL GRID DECK WELD REPAIRS

THIS WORK SHALL CONSIST OF REPLACING EXISTING CRACKED WELDS CONNECTING THE BEARING BARS FOR THE OPEN STEEL GRID BRIDGE DECK ALONG THE TOP OF THE FLOORBEAM OR CROSSBEAM FLANGE (ESTIMATED TOTAL OF 10 FLOORBEAM LOCATIONS AND 44 CROSSBEAM LOCATIONS) AS SHOWN IN THE PLANS OR DIRECTED BY THE ENGINEER.

QUANTITIES GIVEN ARE APPROXIMATE, AND THIS ITEM OF WORK SHALL BE BID WITH THE CONTINGENCY THAT QUANTITIES MAY BE INCREASED OR DECREASED BY THE ENGINEER.

GRIND EXISTING CRACKED WELDS SMOOTH AND FLUSH WITH BASE METAL AND FREE OF NOTCHES AND SHARP REENTRANT CORNERS.

CLEAN EXISTING STRUCTURAL STEEL ADJACENT TO CRACKED WELDS TO BARE METAL ENSURING REMOVAL OF ALL CORRODED AND LOOSE MATERIAL PRIOR TO INSTALLING NEW WELDS.

CARE SHALL BE TAKEN TO CONTAIN AND COLLECT SPENT ABRASIVES AND ANY DEBRIS RESULTING FROM THIS WORK SO THAT THE KENTUCKY RIVER IS STRICTLY PROTECTED. THE ENGINEER SHALL APPROVE THE CONTRACTOR'S CONTAINMENT / COLLECTION PLAN BEFORE THIS WORK BEGINS.

THE UNIT PRICE BID FOR EACH FOOT OF WELD REPAIR SHALL INCLUDE THE COST OF ALL MATERIALS, LABOR, FALSEWORK, EQUIPMENT, AND INCIDENTALS TO COMPLETE THE WORK.

RETROFIT NO. 19

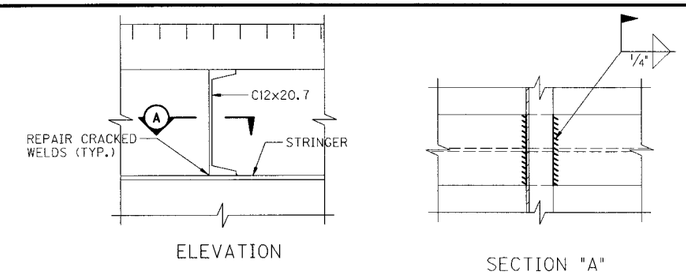

CROSSBEAM WELD REPAIR

THIS WORK SHALL CONSIST OF REPLACING EXISTING CRACKED WELDS CONNECTING THE CROSSBEAM ALONG THE TOP OF THE STRINGER FLANGE (ESTIMATED TOTAL OF 20 LOCATIONS) AS SHOWN IN THE PLANS OR DIRECTED BY THE ENGINEER.

QUANTITIES GIVEN ARE APPROXIMATE, AND THIS ITEM OF WORK SHALL BE BID WITH THE CONTINGENCY THAT QUANTITIES MAY BE INCREASED OR DECREASED BY THE ENGINEER.

GRIND EXISTING CRACKED WELDS SMOOTH AND FLUSH WITH BASE METAL AND FREE OF NOTCHES AND SHARP REENTRANT CORNERS.

CLEAN EXISTING STRUCTURAL STEEL ADJACENT TO CRACKED WELDS TO BARE METAL ENSURING REMOVAL OF ALL CORRODED AND LOOSE MATERIAL PRIOR TO INSTALLING NEW WELDS.

CARE SHALL BE TAKEN TO CONTAIN AND COLLECT SPENT ABRASIVES AND ANY DEBRIS RESULTING FROM THIS WORK SO THAT THE KENTUCKY RIVER IS STRICTLY PROTECTED. THE ENGINEER SHALL APPROVE THE CONTRACTOR'S CONTAINMENT / COLLECTION PLAN BEFORE THIS WORK BEGINS.

THE UNIT PRICE BID FOR EACH FOOT OF WELD REPAIR SHALL INCLUDE THE COST OF ALL MATERIALS, LABOR, FALSEWORK, EQUIPMENT, AND INCIDENTALS TO COMPLETE THE WORK.

RETROFIT NO. 20

REVISION	DATE

DATE: JANUARY 2009	CHECKED BY
DESIGNED BY: K.L. THOMPSON	G.S. WILSON
DETAILED BY: K.L. THOMPSON	G.S. WILSON

Commonwealth of Kentucky
DEPARTMENT OF HIGHWAYS

COUNTY
FRANKLIN

ROUTE: **ST. CLAIR STREET** | CROSSING: **KENTUCKY RIVER**

RETROFITS NO. 19 AND NO. 20

ITEM NUMBER

PREPARED BY
PALMER ENGINEERING CO.

SHEET NO. S16

DRAWING NO. 26522

E-SHEET NAME: DATE: 3/27/2009 6:46:54 AM USERNAME: FILE NAME: ...\SCSB_GRID-DECK-REPAIRS-1.dgn SHEET LOCATION:

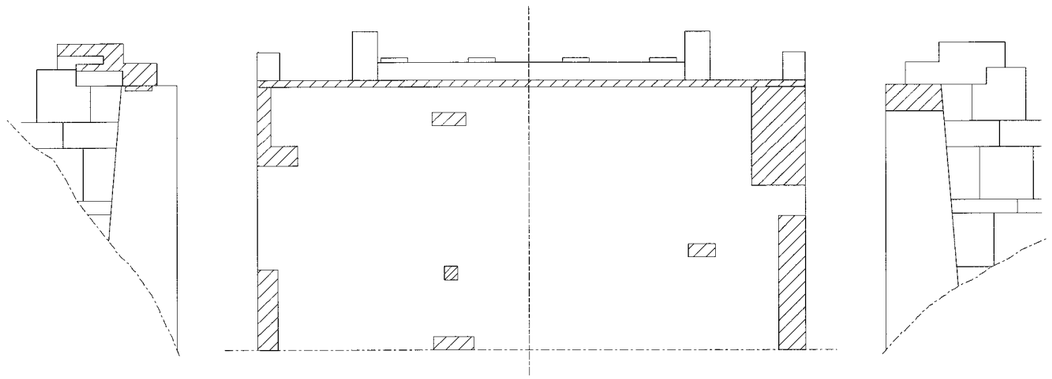

ELEVATION
(EAST WING)

ELEVATION
(FRONT FACE)

ELEVATION
(WEST WING)

ABUTMENT 1 (SOUTH ABUTMENT)

DENOTES AREA ON ABUTMENT TO BE REPAIRED.
SEE REPAIR DETAILS AND ESTIMATED QUANTITIES ON THIS SHEET.

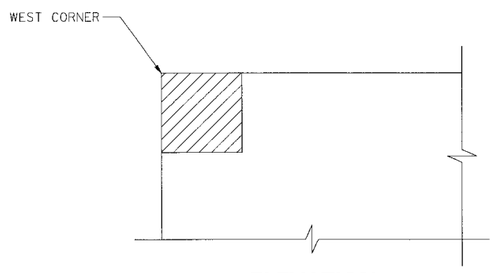

ELEVATION
(FRONT FACE)

ABUTMENT 2 (NORTH ABUTMENT)

DENOTES AREA ON ABUTMENT TO BE REPAIRED.
SEE REPAIR DETAILS AND ESTIMATED QUANTITIES ON THIS SHEET.

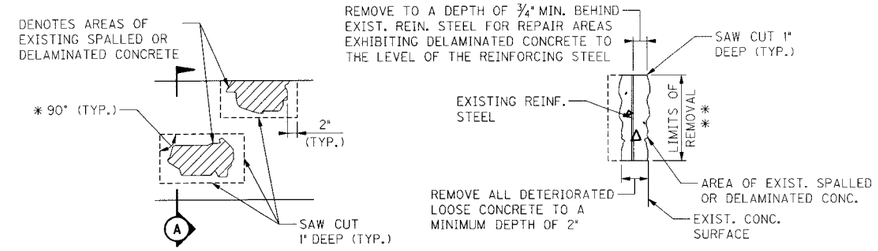

SECTION A

DETAILS SHOWING AREAS OF EXIST. SPALLED OR DELAMINATED CONCRETE SURFACES TO BE REMOVED AND REPAIRED

* DENOTES: LIMITS AND LOCATION OF CONCRETE REPAIRS TO BE DESIGNATED BY THE ENGINEER.

** DENOTES: SAW CUT EXISTING CONCRETE SURFACES SO AS TO OBTAIN SQUARED CORNERS.

CONCRETE REPAIR

THIS WORK SHALL CONSIST OF REPAIRING DETERIORATED PORTIONS OF CONCRETE ON ABUTMENTS USING EPOXY MORTAR, AS SHOWN IN THE PLANS OR DIRECTED BY THE ENGINEER.

QUANTITIES GIVEN ARE APPROXIMATE. THIS WORK SHALL BE BID WITH THE CONTINGENCY THAT QUANTITIES MAY BE INCREASED OR DECREASED BY THE ENGINEER.

EXTREME CARE SHALL BE TAKEN WHEN REMOVING THE EXISTING SPALLED OR DELAMINATED CONCRETE SO AS NOT TO DAMAGE THE EXISTING REINFORCING STEEL. ALL EXPOSED EXISTING REINFORCING STEEL SHALL RECEIVE A COMPLETE CLEANING TO REMOVE ALL RUST. ALL EXISTING SOUND REINFORCEMENT SHALL REMAIN IN PLACE. ANY DETERIORATED OR DAMAGED REINFORCING STEEL SHALL BE REPLACED OR SUPPLEMENTED AS DIRECTED BY THE ENGINEER AND IN ACCORDANCE WITH SECTION 602 OF THE STANDARD SPECIFICATIONS.

THE CONTRACTOR SHALL BE SOLELY RESPONSIBLE FOR THE STABILITY OF THE STRUCTURE DURING REPAIRS.

THE SURFACES OF ALL AREAS WHICH ARE TO BE IN CONTACT WITH THE NEW EPOXY MORTAR PATCH SHALL BE BLAST CLEANED UNTIL THESE SURFACES ARE FREE FROM ALL DUST, DIRT, OIL, GREASE, AND ANY OTHER FOREIGN MATTER. ALL BLAST CLEANING SHALL BE DONE WITHIN TWELVE (12) HOURS PRIOR TO THE PLACEMENT OF THE NEW EPOXY MORTAR PATCH.

CARE SHALL BE TAKEN TO CONTAIN AND COLLECT SPENT ABRASIVES AND ANY DEBRIS RESULTING FROM THIS WORK SO THAT THE KENTUCKY RIVER IS STRICTLY PROTECTED. THE ENGINEER SHALL APPROVE THE CONTRACTOR'S CONTAINMENT / COLLECTION PLAN BEFORE THIS WORK BEGINS.

ONCE DETERIORATED CONCRETE HAS BEEN REMOVED TO SOUND CONCRETE, APPLY AN APPROVED EPOXY RESIN MORTAR PATCH MATERIAL IN ACCORDANCE WITH THE MANUFACTURER'S SPECIFICATIONS AND SECTION 510 OF THE STANDARD SPECIFICATIONS.

ONCE THE EPOXY MORTAR PATCH HAS CURED IN ACCORDANCE WITH THE MANUFACTURER'S SPECIFICATIONS, APPLY AN EPOXY SEAL COAT OVER THE ENTIRE PATCH AND A MINIMUM OF TWO (2) INCHES ONTO THE ADJACENT EXISTING CONCRETE. WORK THE EPOXY SEAL COAT THOROUGHLY INTO ANY CRACKS THAT MAY HAVE DEVELOPED IN THE PATCH OR IN THE INTERFACE OF THE PATCH AND THE EXISTING CONCRETE. PLACE MASKING TAPE ON THE EXISTING CONCRETE SURFACE PRIOR TO APPLYING THIS EPOXY SEAL COAT TO ENSURE A NEAT LINE. REMOVE TAPE AFTER THE SEAL COAT HAS CURED ADEQUATELY.

POWER DRIVEN HAND TOOLS USED FOR REMOVAL OF UNSOUND CONCRETE ARE SUBJECT TO THE FOLLOWING RESTRICTIONS:
1. PNEUMATIC HAMMERS HEAVIER THAN THE 35 LB. CLASS SHALL NOT BE USED.
2. CHIPPING HAMMERS OF THE 15 LB. CLASS SHALL BE USED TO REMOVE CONCRETE FROM BEHIND REINFORCING STEEL.

PNEUMATICALLY PLACED CONCRETE IS NOT ALLOWED.

THE CONTRACTOR SHALL BE RESPONSIBLE FOR REPAIRING AREAS OF PATCH FAILURE DUE TO SHRINKAGE AND/OR DEBONDING OF PATCHES FROM EXISTING CONCRETE. THERE WILL BE NO ADDITIONAL COMPENSATION ALLOWED FOR REPAIR OR REPLACEMENT OF FAILED PATCHES.

THE UNIT PRICE BID FOR EACH CONCRETE REPAIR AREA SHALL INCLUDE THE COST OF ALL MATERIALS, LABOR, FALSEWORK, EQUIPMENT, AND INCIDENTALS TO COMPLETE THE WORK.

ESTIMATED QUANTITIES

LOCATION	APPROXIMATE REPAIR AREAS (S.F.)
ABUT. 1	118
ABUT. 2	3
TOTAL	121

REVISION	DATE

DATE: JANUARY 2009	CHECKED BY
DESIGNED BY: K.L. THOMPSON	G.S. WILSON
DETAILED BY: K.L. THOMPSON	G.S. WILSON

Commonwealth of Kentucky
DEPARTMENT OF HIGHWAYS

COUNTY: FRANKLIN

ROUTE: ST. CLAIR STREET | CROSSING: KENTUCKY RIVER

RETROFIT NO. 21

ITEM NUMBER

RETROFIT NO. 21

PREPARED BY: PALMER ENGINEERING CO.

SHEET NO. S17

DRAWING NO. 26522

SHEET LOCATION:
FILE NAME: ...\SCSB_ABUT-CONCRETE-REPAIRS.dgn
USERNAME:
DATE: 3/27/2009 6:46:55 AM
E-SHEET NAME:

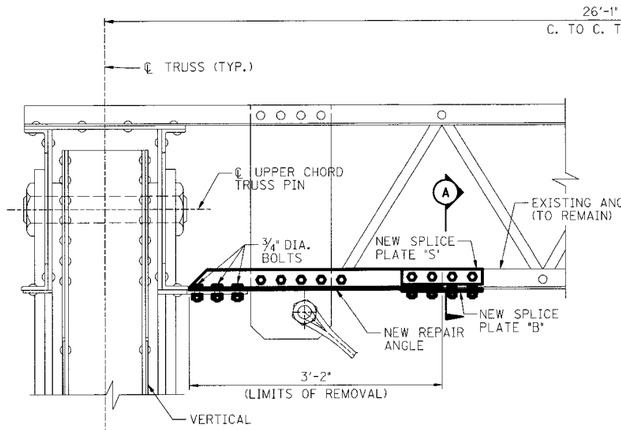

REPAIR AT UPPER CHORD PANEL POINT WITH TRUSS PIN CONNECTION

(WEST END SHOWN, EAST END OPPOSITE HAND)

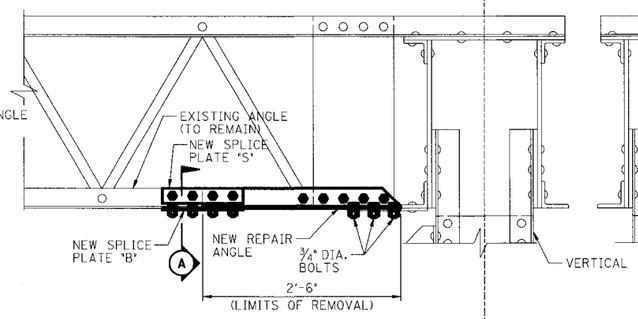

REPAIR AT UPPER CHORD PANEL POINT WITHOUT TRUSS PIN CONNECTION

(EAST END SHOWN, WEST END OPPOSITE HAND)

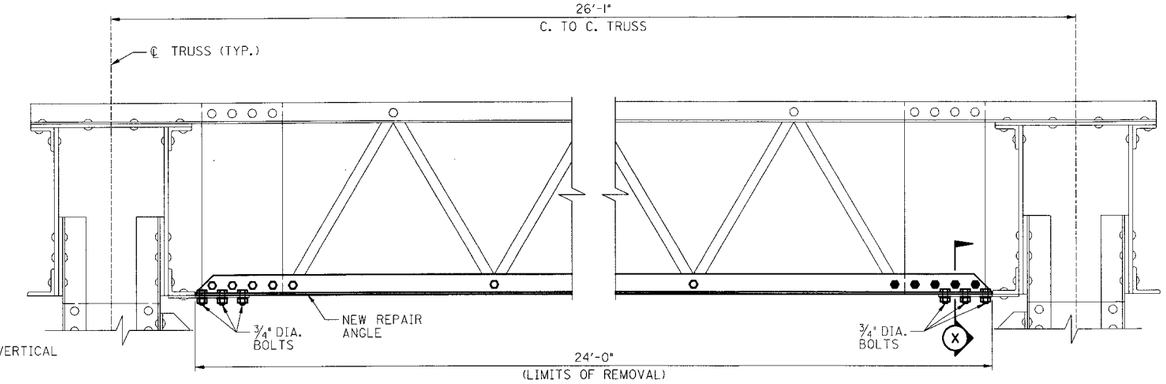

DOUBLE ANGLE REPAIR AT U3

ALL BOLTS ⅝" UNLESS OTHERWISE NOTED

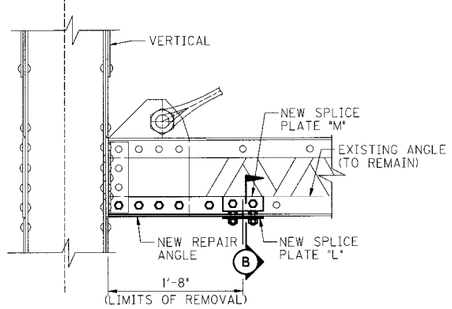

REPAIR AT MIDDLE PANEL POINT WITH TRUSS PIN CONNECTION

(WEST END SHOWN, EAST END OPPOSITE HAND)

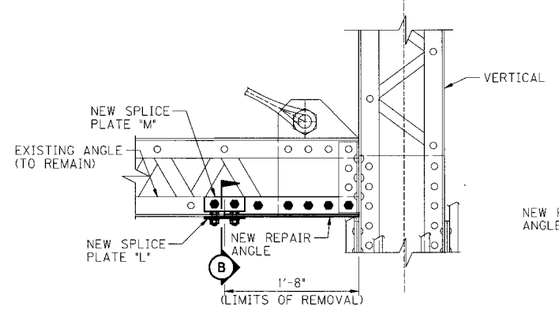

REPAIR AT MIDDLE PANEL POINT WITHOUT TRUSS PIN CONNECTION

(EAST END SHOWN, WEST END OPPOSITE HAND)

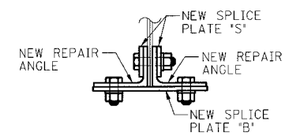

SECTION "A"

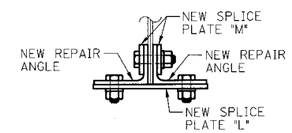

SECTION "B"

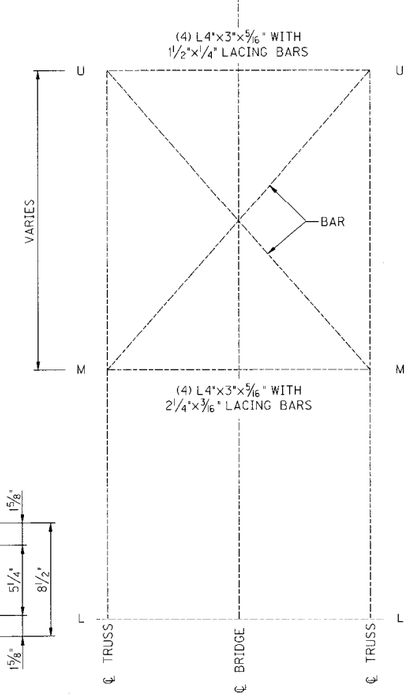

ELEVATION

TYPICAL BRACING

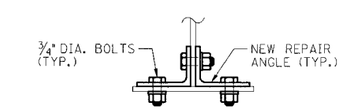

SECTION "X"

UPPER LATERAL BRACING DOUBLE ANGLE REPAIR

LOCATION	WEST END	EAST END
M2	X	
U3	FULL LENGTH	
M4	X	X
U4	X	
M5	X	X
U5	X	X
U6	X	X
U7	X	X
U'6	X	X
U'4	X	
U'2	X	

UPPER LATERAL BRACING DOUBLE ANGLE REPAIR

(ALL BOLTS ⅝" UNLESS OTHERWISE NOTED)

THIS WORK SHALL CONSIST OF REPLACING DETERIORATED PORTIONS OF THE THE UPPER LATERAL BRACING DOUBLE ANGLES AS SHOWN IN THE PLANS OR DIRECTED BY THE ENGINEER.

THIS WORK INCLUDES FURNISHING AND INSTALLING NEW STRUCTURAL STEEL SPLICE PLATES ON EACH SIDE OF THE BRACING WHERE PORITONS OF THE EXISTING ANGLES ARE TO REMAIN. THIS IS INCIDENTAL TO THE UNIT PRICE BID FOR THIS ITEM OF WORK.

THE CONTRACTOR IS COMPLETELY RESPONSIBLE FOR THE STABILITY OF THE STRUCTURE DURING REPAIRS.

ALL SURFACES TO BE ATTACHED TO NEW BRACING ANGLE OR CONNECTION PLATE SHALL BE THOROUGHLY CLEANED AND PREPARED PER SPECIFICATIONS PRIOR TO PLACEMENT OF NEW ANGLE.

CARE SHALL BE TAKEN TO CONTAIN AND COLLECT SPENT ABRASIVES AND ANY DEBRIS RESULTING FROM THIS WORK SO THAT THE KENTUCKY RIVER IS STRICTLY PROTECTED. THE ENGINEER SHALL APPROVE THE CONTRACTOR'S CONTAINMENT / COLLECTION PLAN BEFORE THIS WORK BEGINS.

ALL EXISTING BOLTS THAT ARE LOOSENED OR REMOVED SHALL BE REPLACED WITH NEW A325 BOLTS WITH NEW HEAVY HEX NUTS. THIS IS INCIDENTAL TO THE UNIT PRICE BID FOR THIS ITEM OF WORK.

ALL NEW STRUCTURAL STEEL USED FOR THIS WORK SHALL BE ASTM A709, GRADE 36.

THE CONTRACTOR SHALL FIELD VERIFY THE ANGLE SIZE AND LENGTHS AND RIVET SIZES AND LOCATIONS TO DUPLICATE EXISTING CONNECTIONS. ALL NEW CONNECTIONS SHALL USE H.S. BOLTS.

THE UNIT PRICE BID SHALL INCLUDE THE COST OF ALL MATERIALS, LABOR, FALSEWORK, EQUIPMENT, AND INCIDENTALS TO COMPLETE THE WORK.

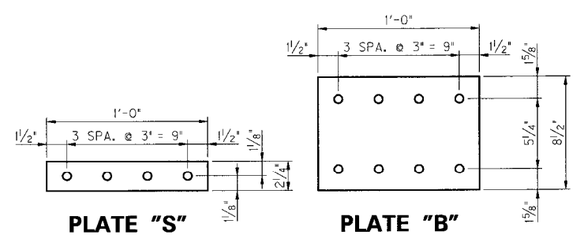

PLATE "S"

PLATE "B"

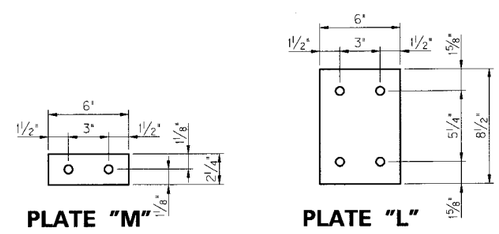

PLATE "M"

PLATE "L"

RETROFIT NO. 22

ITEM NUMBER

REVISION	DATE

DATE: JANUARY 2009	CHECKED BY
DESIGNED BY: K.L. THOMPSON	G.S. WILSON
DETAILED BY: C.D. VICTORY	G.S. WILSON

Commonwealth of Kentucky
DEPARTMENT OF HIGHWAYS

COUNTY
FRANKLIN

ROUTE: **ST. CLAIR STREET** | CROSSING: **KENTUCKY RIVER**

RETROFIT NO. 22

PREPARED BY
PALMER ENGINEERING CO.

SHEET NO. **S18**
DRAWING NO. **26522**

SHEET LOCATION:
FILE NAME: ...\SCSB_UPPER LATERAL BRACING DOUBLE ANGLE REPAIR.dgn
USERNAME:
DATE: 3/27/2009 6:46:55 AM
E-SHEET NAME:

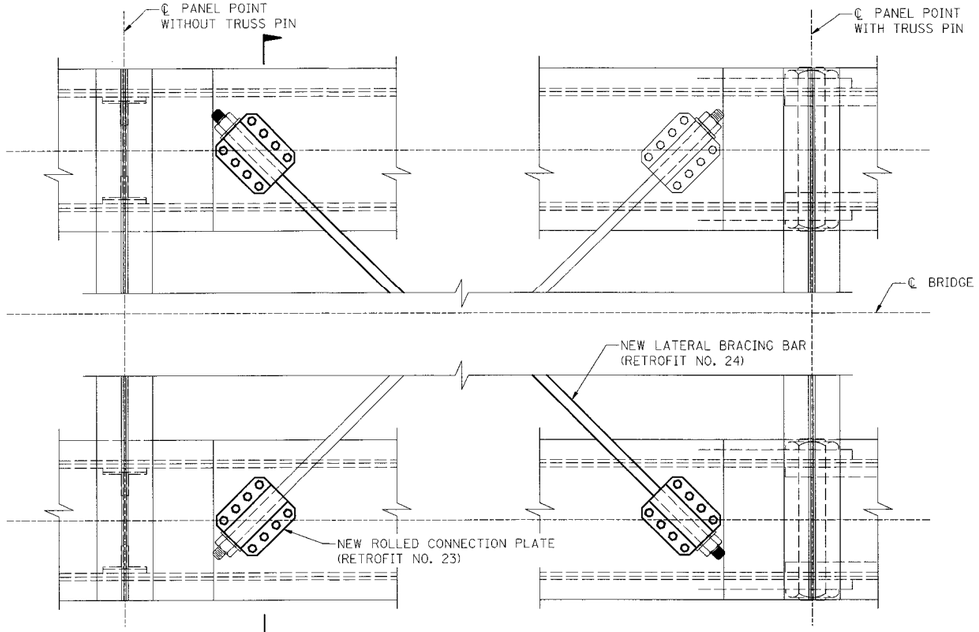

(A) UPPER LATERAL BRACING – PLAN

(UPPER CHORD)

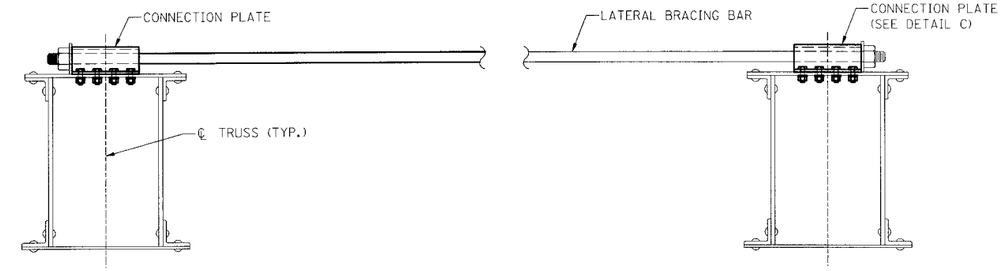

SECTION "A"

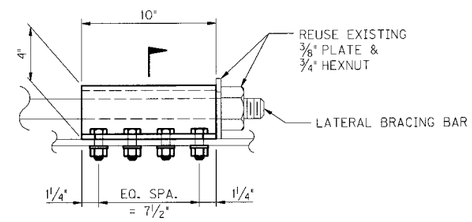

(B) DETAIL C – ELEVATION

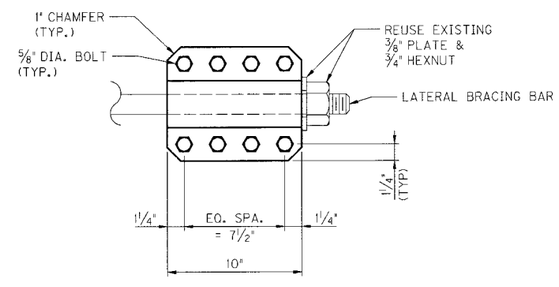

DETAIL C – PLAN

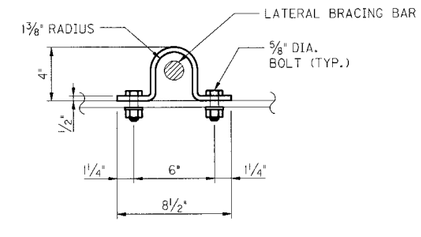

SECTION "B"

ROLLED CONNECTION PLATE DETAILS

ESTIMATED QUANTITIES AND LOCATIONS FOR RETROFITS NO. 23 AND 24

LOCATION	MEMBER	RETROFIT NO. 23	RETROFIT NO. 24
U'1 E	U'1 W ~ U'2 E	X	X
U'2 W	U'2 W ~ U'3 E	X	
U'3 W	U'3 W ~ U'4 E	X	X
U'3 E	U'3 E ~ U'4 W	X	X
U3 W	U3 W ~ U4 E	X	X
U3 W	U3 W ~ U2 E	X	X

"W" DENOTES WEST TRUSS
"E" DENOTES EAST TRUSS

CONNECTION REPAIR

RETROFIT NO. 23

THIS WORK SHALL CONSIST OF REPLACING DETERIORATED UPPER CHORD LATERAL BRACING CONNECTION PLATES AS SHOWN IN THE PLANS OR DIRECTED BY THE ENGINEER.

IF MORE THAN ONE BRACING CONNECTION PLATE IS TO BE REPLACED IN THE SAME BAY, THE CONTRACTOR SHALL REMOVE AND REPLACE THE LATERAL BRACING CONNECTION PLATE ONE AT A TIME. THE CONTRACTOR IS COMPLETELY RESPONSIBLE FOR THE STABILITY OF THE STRUCTURE DURING REPAIRS.

ALL SURFACES TO BE ATTACHED TO NEW UPPER CHORD LATERAL BRACING CONNECTION PLATE SHALL BE THOROUGHLY CLEANED AND PREPARED PER SPECIFICATIONS PRIOR TO PLACEMENT OF NEW LATERAL BRACING CONNECTION PLATE.

CARE SHALL BE TAKEN TO CONTAIN AND COLLECT SPENT ABRASIVES AND ANY DEBRIS RESULTING FROM THIS WORK SO THAT THE KENTUCKY RIVER IS STRICTLY PROTECTED. THE ENGINEER SHALL APPROVE THE CONTRACTOR'S CONTAINMENT / COLLECTION PLAN BEFORE THIS WORK BEGINS.

ALL NEW STRUCTURAL STEEL USED FOR THIS WORK SHALL BE ASTM A709, GRADE 36.

THE CONTRACTOR SHALL FIELD VERIFY THE CONNECTION PLATE SIZES AND LENGTHS AND RIVET SIZES AND LOCATIONS TO DUPLICATE EXISTING CONNECTIONS. ALL NEW CONNECTIONS SHALL USE H.S. BOLTS.

ALL EXISTING BOLTS AND RIVETS THAT ARE LOOSENED OR REMOVED SHALL BE REPLACED WITH NEW A325 BOLTS WITH NEW HEAVY HEX NUTS. THIS IS INCIDENTAL TO THE UNIT PRICE BID FOR THIS ITEM OF WORK.

THE UNIT PRICE BID FOR REPLACING EACH UPPER CHORD LATERAL BRACING CONNECTION PLATE SHALL INCLUDE THE COST OF ALL MATERIALS, LABOR, EQUIPMENT, AND INCIDENTALS TO COMPLETE THE WORK.

BAR REPLACEMENT

RETROFIT NO. 24

THIS WORK SHALL CONSIST OF REPLACING DETERIORATED UPPER CHORD LATERAL BRACING BARS AS SHOWN IN THE PLANS OR DIRECTED BY THE ENGINEER.

IF MORE THAN ONE BRACING BAR IS TO BE REPLACED IN THE SAME BAY, THE CONTRACTOR SHALL REMOVE AND REPLACE THE LATERAL BRACING BARS ONE AT A TIME. THE CONTRACTOR IS COMPLETELY RESPONSIBLE FOR THE STABILITY OF THE STRUCTURE DURING REPAIRS.

ALL SURFACES TO BE ATTACHED TO NEW UPPER CHORD LATERAL BRACING BAR SHALL BE THOROUGHLY CLEANED AND PREPARED PER SPECIFICATIONS PRIOR TO PLACEMENT OF NEW LATERAL BRACING BAR.

CARE SHALL BE TAKEN TO CONTAIN AND COLLECT SPENT ABRASIVES AND ANY DEBRIS RESULTING FROM THIS WORK SO THAT THE KENTUCKY RIVER IS STRICTLY PROTECTED. THE ENGINEER SHALL APPROVE THE CONTRACTOR'S CONTAINMENT / COLLECTION PLAN BEFORE THIS WORK BEGINS.

ALL NEW STRUCTURAL STEEL USED FOR THIS WORK SHALL BE ASTM A709, GRADE 36.

THE CONTRACTOR SHALL FIELD VERIFY THE LATERAL BRACING BAR SIZE AND LENGTH AND RIVET SIZES AND LOCATIONS TO DUPLICATE EXISTING CONNECTIONS. ALL NEW CONNECTIONS SHALL USE H.S. BOLTS.

ALL EXISTING BOLTS AND RIVETS THAT ARE LOOSENED OR REMOVED SHALL BE REPLACED WITH NEW A325 BOLTS WITH NEW HEAVY HEX NUTS. THIS IS INCIDENTAL TO THE UNIT PRICE BID FOR THIS ITEM OF WORK.

THE UNIT PRICE BID FOR REPLACING EACH UPPER CHORD LATERAL BRACING BAR SHALL INCLUDE THE COST OF ALL MATERIALS, LABOR, EQUIPMENT, AND INCIDENTALS TO COMPLETE THE WORK.

REVISION	DATE

DATE: JANUARY 2009	CHECKED BY
DESIGNED BY: K.L. THOMPSON	G.S. WILSON
DETAILED BY: C.D. VICTORY	G.S. WILSON

Commonwealth of Kentucky
DEPARTMENT OF HIGHWAYS

COUNTY: FRANKLIN

ROUTE: ST. CLAIR STREET — CROSSING: KENTUCKY RIVER

RETROFIT NO. 23 & 24

RETROFITS NO. 23 AND NO. 24

ITEM NUMBER

PREPARED BY: PALMER ENGINEERING CO.

SHEET NO. S19

DRAWING NO. 26522

SHEET LOCATION:
FILE NAME: ...\SCSB_UPPER LATERAL BRACING CONNECTION REPAIR.dgn
USERNAME:
DATE: 3/27/2009 6:46:56 AM
E-SHEET NAME:

RIVET / BOLT REPLACEMENT

THIS WORK SHALL CONSIST OF REPLACING ALL EXISTING LOOSE, SIGNIFICANTLY DETERIORATED, OR MISSING RIVETS OR BOLTS THROUGHOUT THE STRUCTURE IN KIND (SIZE AND LENGTH) WITH NEW H.S. BOLTS AS DIRECTED BY THE ENGINEER. THIS WORK IS FOR THE REPLACEMENT OF BOLTS AND RIVETS THAT ARE NOT INCLUDED WITH OTHER RETROFIT DETAILS. THE APPROXIMATE NUMBER OF EXISTING RIVETS AND BOLTS TO BE REPLACED IS 200.

THE UNIT PRICE BID FOR EACH RIVET OR BOLT REPLACEMENT AS DESCRIBED ABOVE SHALL INCLUDE THE COST OF ALL MATERIALS, LABOR, FALSEWORK, EQUIPMENT, AND INCIDENTALS TO COMPLETE THE WORK.

RETROFIT NO. 25

ABANDONED UTILITY REMOVAL

UTILITIES: THE CONTRACTOR SHALL MAINTAIN ALL ACTIVE UTILITIES DURING CONSTRUCTION. EXISTING ABANDONED UTILITY LINES ON THE BRIDGE SHALL BE REMOVED. COST OF REMOVAL SHALL BE INCLUDED THE PRICE BID FOR ABANDONED UTILITY REMOVAL, L.S.

UTILITIES OWNERS:

ELECTRIC: FRANKFORT PLANT BOARD
305 HICKORY DRIVE
FRANKFORT, KY 40601
MR. JIMMY ALLEN
502.352.4501

GAS: COLUMBIA GAS
120 COMMERCE BLVD.
FRANKFORT, KY 40601
GREG HATTON
859.621.6973

TELEPHONE: AT&T
348 PRODUCTION COURT
LOUISVILLE, KY 40299
MR. KELVIN JOHNSON
859.963.8629

WATER: FRANKFORT PLANT BOARD
305 HICKORY DRIVE
FRANKFORT, KY 40601
MR. JIMMY ALLEN
502.352.4501

SEWER: CITY OF FRANKFORT
SEWER DEPARTMENT
1200 KENTUCKY AVENUE
FRANKFORT, KY 40601
MR. TIM AUBERRY
502.229.6172

CABLE: FRANKFORT PLANT BOARD
306 HICKORY DRIVE
FRANKFORT, KY 40601
MR. CARL MITCHELL
502.352.4505

SEE SHEET S3 FOR SECTION OF DECK SHOWING POTENTIAL UTILITIES TO BE REMOVED.

RETROFIT NO. 26

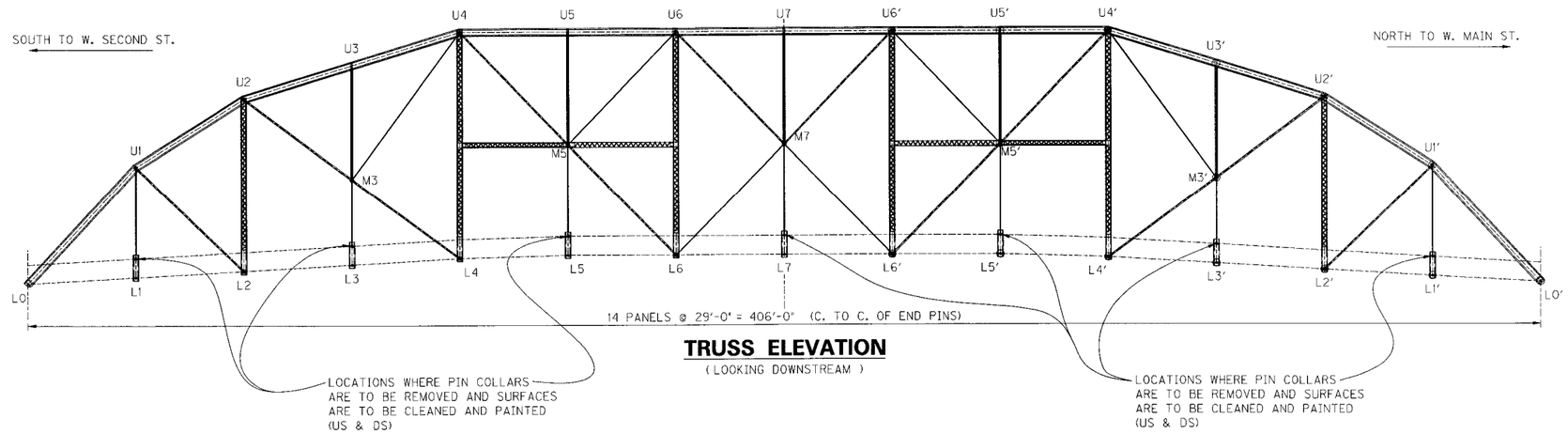

TRUSS ELEVATION
(LOOKING DOWNSTREAM)

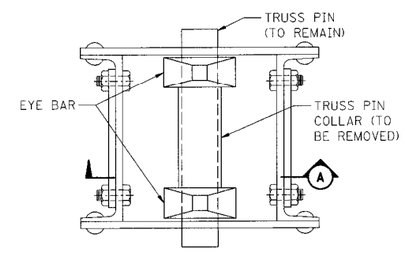

PLAN - TRUSS PIN
(AT SIDEWALK LEVEL)

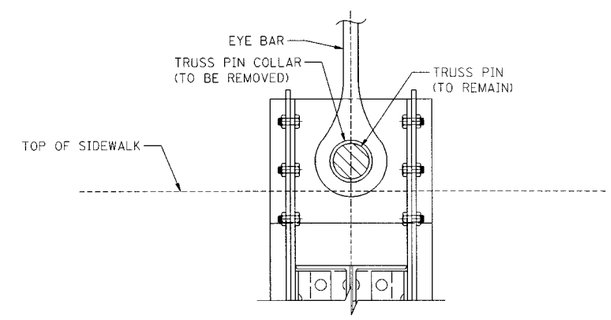

SECTION "A"

PIN COLLAR REMOVAL

THIS WORK SHALL CONSIST OF REMOVING EACH SIDEWALK - LEVEL COLLAR, CLEANING, AND PAINTING EXISTING PIN AND EYE BAR SURFACES (14 LOCATIONS) AS SHOWN IN THE PLANS OR DIRECTED BY THE ENGINEER.

CARE SHALL BE TAKEN AS TO NOT DAMAGE ADJACENT STRUCTURAL MEMBERS DURING COMPLETION OF THIS WORK.

AFTER REMOVAL OF THE PIN COLLARS, THE SURFACE OF THE PINS AND VERTICAL EYE BAR CONNECTIONS SHALL BE COMPLETELY CLEANED AND PAINTED IN ACCORDANCE WITH SECTION 607.03.23 OF THE SPECIFICATIONS. PAINT SHALL MATCH THE EXISTING PAINT COLOR AS CLOSELY AS POSSIBLE.

CARE SHALL BE TAKEN TO CONTAIN AND COLLECT SPENT ABRASIVES AND ANY DEBRIS RESULTING FROM THIS WORK SO THAT THE KENTUCKY RIVER IS STRICTLY PROTECTED. THE ENGINEER SHALL APPROVE THE CONTRACTOR'S CONTAINMENT / COLLECTION PLAN BEFORE THIS WORK BEGINS.

THE UNIT PRICE BID FOR REMOVING EACH TRUSS PIN COLLAR SHALL INCLUDE THE COST OF ALL MATERIALS, LABOR, FALSEWORK, EQUIPMENT, AND INCIDENTALS TO COMPLETE THE WORK.

RETROFIT NO. 27

ITEM NUMBER

REVISION	DATE

DATE: JANUARY 2009	CHECKED BY
DESIGNED BY: D. RUST	G.S. WILSON
DETAILED BY: C.D. VICTORY	D. RUST

Commonwealth of Kentucky
DEPARTMENT OF HIGHWAYS

COUNTY: **FRANKLIN**

ROUTE: **ST. CLAIR STREET** | CROSSING: **KENTUCKY RIVER**

RETROFITS NO. 25 THRU NO. 27

PREPARED BY: *PALMER ENGINEERING CO.*

SHEET NO. S20
DRAWING NO. 26522

SHEET LOCATION:
FILE NAME: ...\FINAL\SCSB_PIN COLLAR.dgn
USERNAME:
DATE: 3/27/2009 6:46:57 AM
E-SHEET NAME:

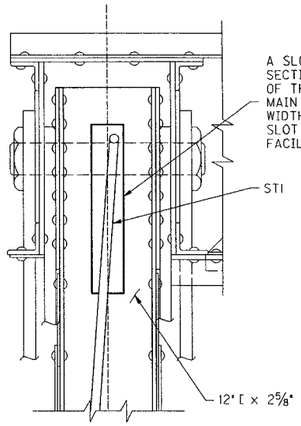

SECTION "A-A"

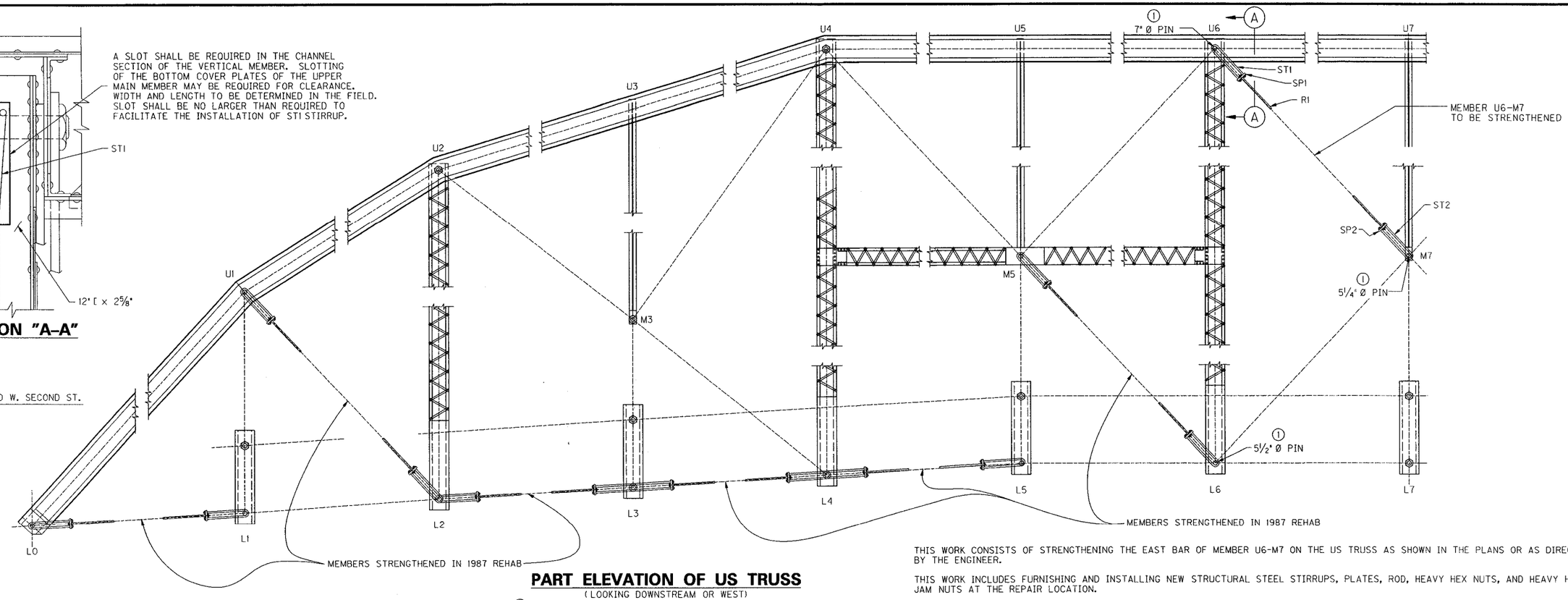

PART ELEVATION OF US TRUSS

(LOOKING DOWNSTREAM OR WEST)

① THESE PIN DIAMETERS (OR COLLAR DIAMETERS) MUST BE CHECKED BEFORE FABRICATING THE NEW STIRRUPS AND STIRRUP PLATES. THE STIRRUP AND STIRRUP PLATES DETAILED IN THESE PLANS ARE TO ACCOMODATE THE PIN SIZE SHOWN AND MUST BE ADJUSTED FOR ANY VARIANCE.

THIS WORK CONSISTS OF STRENGTHENING THE EAST BAR OF MEMBER U6-M7 ON THE US TRUSS AS SHOWN IN THE PLANS OR AS DIRECTED BY THE ENGINEER.

THIS WORK INCLUDES FURNISHING AND INSTALLING NEW STRUCTURAL STEEL STIRRUPS, PLATES, ROD, HEAVY HEX NUTS, AND HEAVY HEX JAM NUTS AT THE REPAIR LOCATION.

CUT SLOT IN WEB OF CHANNEL AND INSTALL STIRRUP ST1 AROUND THE CENTER OF PIN @ U6. INSTALL STIRRUP ST2 AROUND EAST BAR OF MEMBER U6-M7 AT M7. STIRRUP ST2 MUST ENCIRCLE END OF EYE BAR BECAUSE ENTIRE LENGTH OF PIN IS COVERED WITH EXISTING MEMBERS.

BRING THE HEAVY HEX NUTS TO "SNUG-TIGHT" CONDITION PER SECTION 607.03.05 OF THE SPECIFICATIONS. ONCE THE ASSEMBLY IS IN SNUG-TIGHT CONDITION, INSTALL JAM NUTS ON STIRRUPS AND ROD R1.

THE CONTRACTOR SHALL FIELD VERIFY DIMENSIONS BEFORE REPAIR IS MADE.

ROD AND STIRRUPS SHALL BE ASTM A572 GRADE 65 AND PLATES SHALL BE GRADE 50.

SEE GENERAL NOTE SHEET FOR NOTE CONCERNING PAINTING NEW AND EXISTING STRUCTURAL STEEL.

THE CONTRACTOR IS COMPLETELY RESPONSIBLE FOR THE STABILITY OF THE STRUCTURE DURING THE REPAIR.

CARE SHALL BE TAKEN TO CONTAIN AND COLLECT SPENT ABRASIVES AND ANY DEBRIS RESULTING FROM THIS WORK SO THAT THE KENTUCKY RIVER IS STRICTLY PROTECTED. THE ENGINEER SHALL APPROVE THE CONTRACTOR'S CONTAINMENT / COLLECTION PLAN BEFORE THIS WORK BEGINS.

THE UNIT PRICE BID FOR STRENGTHENING MEMBER U6-M5 ON THE US TRUSS SHALL INCLUDE THE COST OF ALL MATERIALS, LABOR, FALSEWORK, EQUIPMENT, AND INCIDENTALS TO COMPLETE THE WORK.

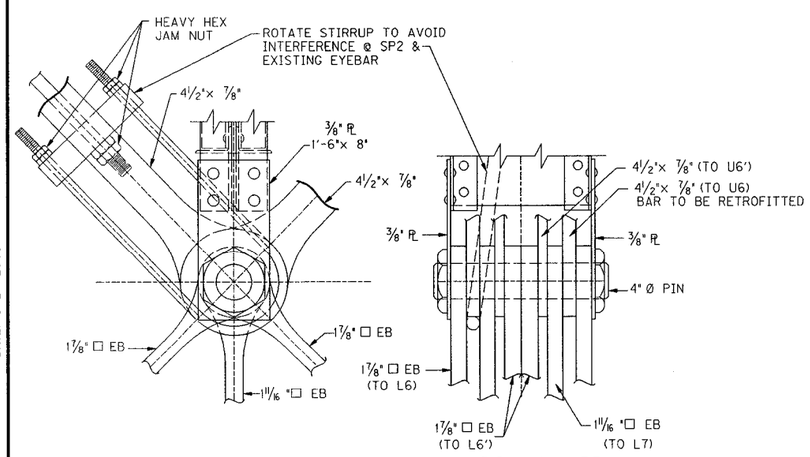

TRUSS PP. M7

(LOOKING DOWNSTREAM)

TRUSS PP. M7

(LOOKING SOUTH)

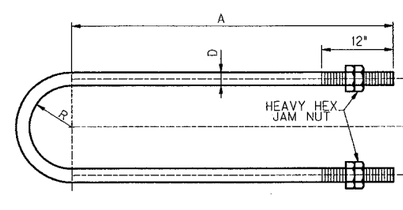

STIRRUPS ST1 & ST2

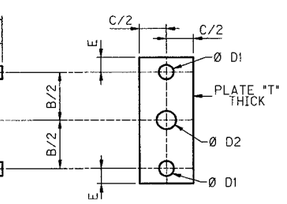

PLATES SP1 & SP2

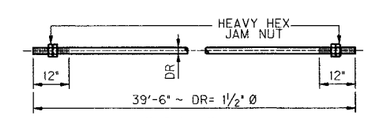

ROD R1

STIRRUP AND PLATE DIMENSIONS

MARK	D	A	B	R
ST1	1"	2'-0"	8¼"	3³⁄₁₆"
ST2	1"	2'-0"	11"	5"

MARK	C	E	T	D1	D2	B
SP1	4"	1¼"	3"	1⅛"	1⅝"	8¼"
SP2	4"	1¼"	3"	1⅛"	1⅝"	11"

RETROFIT NO. 28

ITEM NUMBER

REVISION	DATE

DATE: JANUARY 2009	CHECKED BY
DESIGNED BY: D.E. RUST	B.N. ROBSON
DETAILED BY: J.A. ROSE	D.E. RUST

Commonwealth of Kentucky
DEPARTMENT OF HIGHWAYS

COUNTY: **FRANKLIN**

ROUTE: **ST. CLAIR STREET** | CROSSING: **KENTUCKY RIVER**

RETROFIT NO. 28

PREPARED BY: ***PALMER ENGINEERING CO.***

SHEET NO. S21

DRAWING NO. 26522

SHEET LOCATION:

FILE NAME: ...\SCSB_retrofit_28.dgn

USERNAME:

DATE: 3/27/2009 10:05:08 AM

E-SHEET NAME:

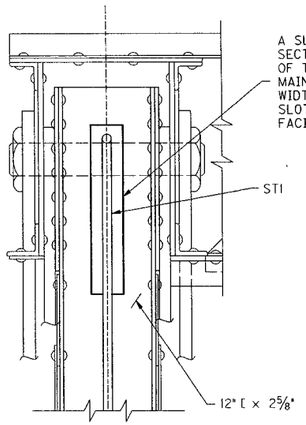

A SLOT SHALL BE REQUIRED IN THE CHANNEL SECTION OF THE VERTICAL MEMBER. SLOTTING OF THE BOTTOM COVER PLATES OF THE UPPER MAIN MEMBER MAY BE REQUIRED FOR CLEARANCE. WIDTH AND LENGTH TO BE DETERMINED IN THE FIELD. SLOT SHALL BE NO LARGER THAN REQUIRED TO FACILITATE THE INSTALLATION OF ST1 STIRRUP.

SECTION "A-A"

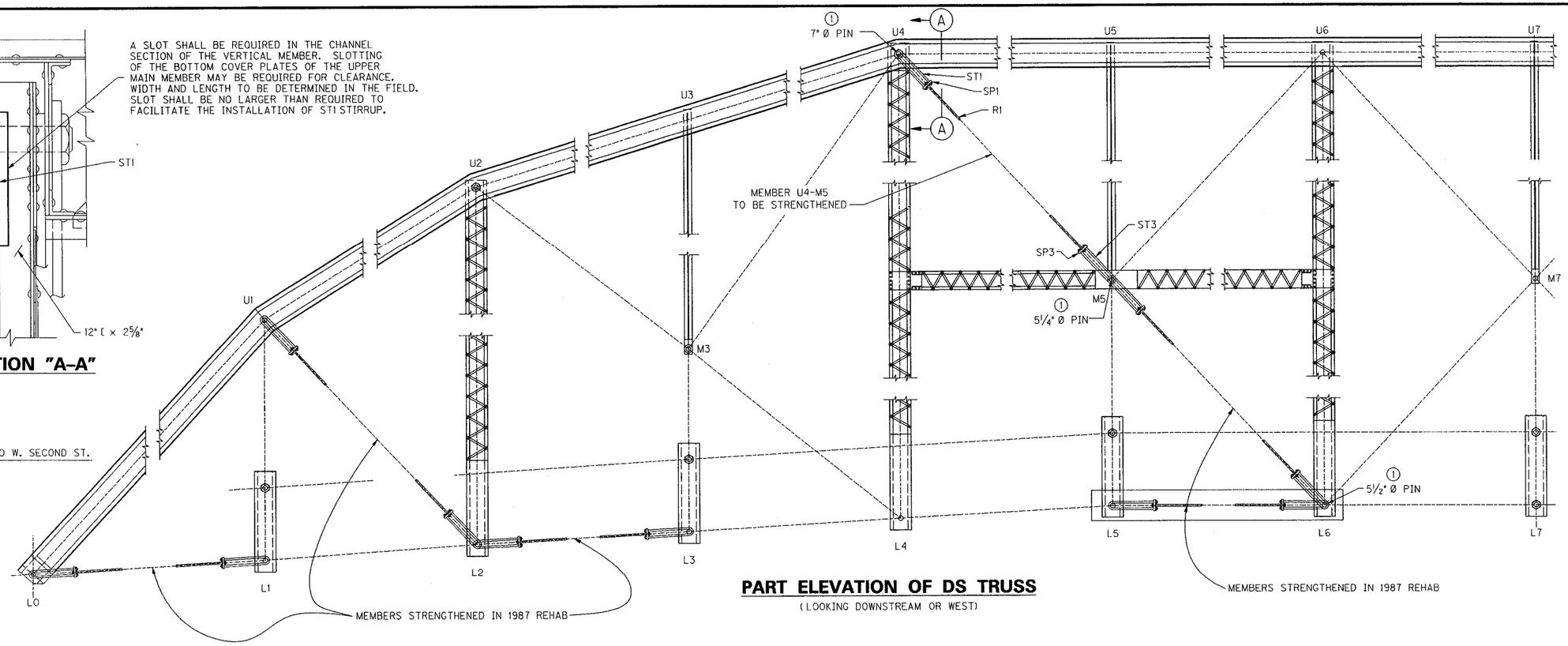

PART ELEVATION OF DS TRUSS

(LOOKING DOWNSTREAM OR WEST)

① THESE PIN DIAMETERS (OR COLLAR DIAMETERS) MUST BE CHECKED BEFORE FABRICATING THE NEW STIRRUPS AND STIRRUP PLATES. THE STIRRUP AND STIRRUP PLATES DETAILED IN THESE PLANS ARE TO ACCOMODATE THE PIN SIZE SHOWN AND MUST BE ADJUSTED FOR ANY VARIANCE.

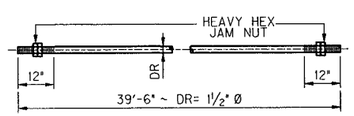

ROD R1

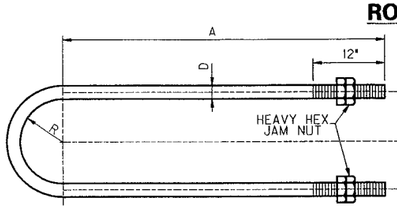

STIRRUPS ST1 & ST3

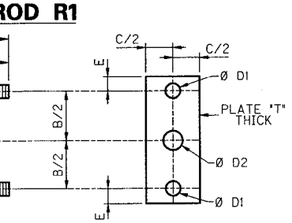

PLATES SP1 & SP3

STIRRUP AND PLATE DIMENSIONS

MARK	D	A	B	R
ST1	1"	2'-0"	8¼"	3 9/16"
ST3	1"	2'-0"	6⅜"	2 11/16"

MARK	C	E	T	D1	D2	B
SP1	4"	1¼"	3"	1⅛"	1⅝"	8¼"
SP3	4"	1¼"	3"	1⅛"	1⅝"	6⅜"

THIS WORK CONSISTS OF STRENGTHENING MEMBER M5-U4 ON THE DS TRUSS AS SHOWN IN THE PLANS OR AS DIRECTED BY THE ENGINEER.

THIS WORK INCLUDES FURNISHING AND INSTALLING NEW STRUCTURAL STEEL STIRRUPS, PLATES, ROD, HEAVY HEX NUTS, AND HEAVY HEX JAM NUTS AT THE REPAIR LOCATION.

CUT SLOT IN WEB OF CHANNEL AND INSTALL STIRRUP ST1 AROUND THE CENTER OF PIN AT U4. INSTALL STIRRUP ST3 AROUND COLLAR AT M5 NEXT TO STIRRUP FROM PREVIOUS RETROFIT.

INSTALL ROD BY BRINGING THE HEAVY HEX NUTS TO "SNUG TIGHT" CONDITION PER SECTION 607.03.05 OF THE SPECIFICATIONS. ONCE THE ASSEMBLY IS IN A SNUG-TIGHT CONDITION, INSTALL JAM NUTS ON STIRRUPS AND ROD R1.

THE CONTRACTOR SHALL FIELD VERIFY DIMENSIONS BEFORE REPAIR IS MADE.

ROD AND STIRRUPS SHALL BE ASTM A572 GRADE 65, AND PLATES SHALL BE GRADE 50.

SEE GENERAL NOTE SHEET FOR NOTE CONCERNING PAINTING NEW AND EXISTING STRUCTURAL STEEL.

THE CONTRACTOR IS COMPLETELY RESPONSIBLE FOR STABILITY OF THE STRUCTURE DURING REPAIR.

CARE SHALL BE TAKEN TO CONTAIN AND COLLECT SPENT ABRASIVES AND ANY DEBRIS RESULTING FROM THIS WORK SO THAT THE KENTUCKY RIVER IS STRICTLY PROTECTED. THE ENGINEER SHALL APPROVE THE CONTRACTOR'S CONTAINMENT / COLLECTION PLAN BEFORE THIS WORK BEGINS.

THE UNIT PRICE BID FOR STRENGTHENING MEMBER M5-U4 ON THE DS TRUSS SHALL INCLUDE THE COST OF ALL MATERIALS, LABOR, FALSEWORK, EQUIPMENT, AND INCIDENTALS TO COMPLETE THE WORK.

REVISION	DATE

DATE: JANUARY 2009	CHECKED BY
DESIGNED BY: D.E. RUST	B.N. ROBSON
DETAILED BY: J.A. ROSE	D.E. RUST

Commonwealth of Kentucky
DEPARTMENT OF HIGHWAYS

COUNTY: FRANKLIN

ROUTE: ST. CLAIR STREET — CROSSING: KENTUCKY RIVER

RETROFIT NO. 29

ITEM NUMBER

RETROFIT NO. 29

PREPARED BY: PALMER ENGINEERING CO.

SHEET NO. S22

DRAWING NO. 26522

SHEET LOCATION:

FILE NAME: ...\SCSB_retrofit_29.dgn

USERNAME:

DATE: 3/27/2009 10:05:08 AM

E-SHEET NAME:

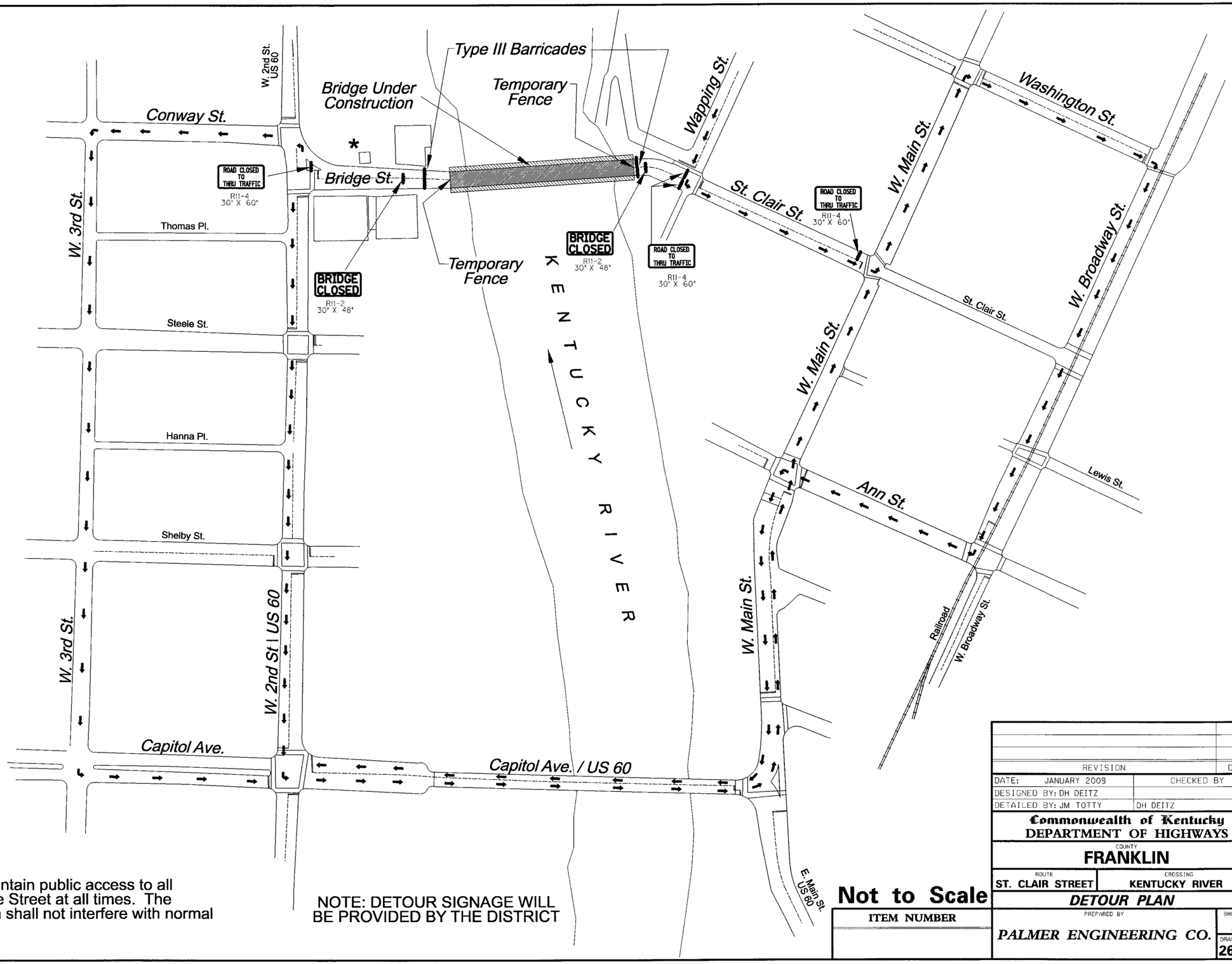

* The contractor shall maintain public access to all businesses along Bridge Street at all times. The contractors staging area shall not interfere with normal business operation.

NOTE: DETOUR SIGNAGE WILL BE PROVIDED BY THE DISTRICT

Not to Scale

ITEM NUMBER

REVISION	DATE

DATE: JANUARY 2009	CHECKED BY
DESIGNED BY: DH DEITZ	
DETAILED BY: JM TOTTY	DH DEITZ

Commonwealth of Kentucky
DEPARTMENT OF HIGHWAYS

COUNTY: **FRANKLIN**

ROUTE: **ST. CLAIR STREET** | CROSSING: **KENTUCKY RIVER**

DETOUR PLAN

PREPARED BY: *PALMER ENGINEERING CO.*

SHEET NO. A1

DRAWING NO. 26522

SHEET LOCATION:

FILE NAME: ...\Dgn\SCSB_MOT.dgn

USERNAME:

DATE: 3/27/2009 6:46:58 AM

S-SHEET NAME:

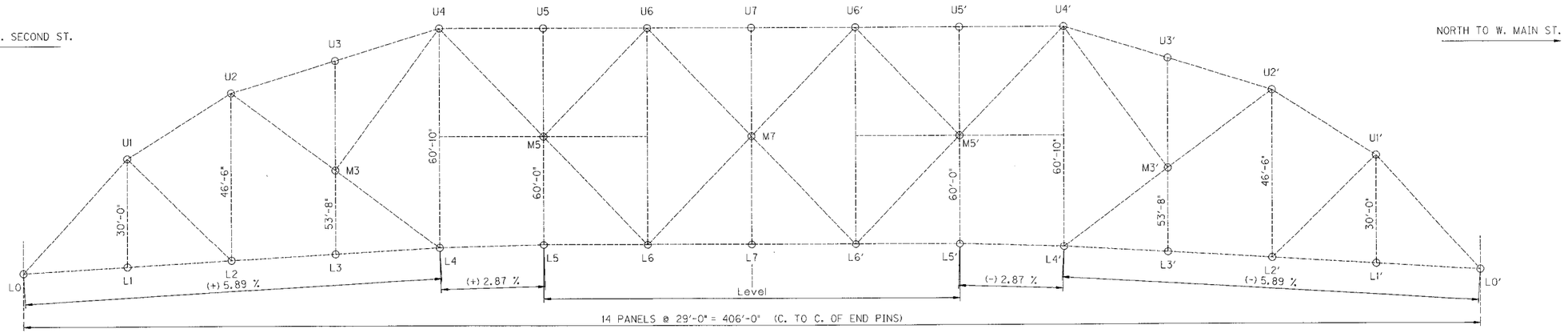

TYPICAL TRUSS ELEVATION

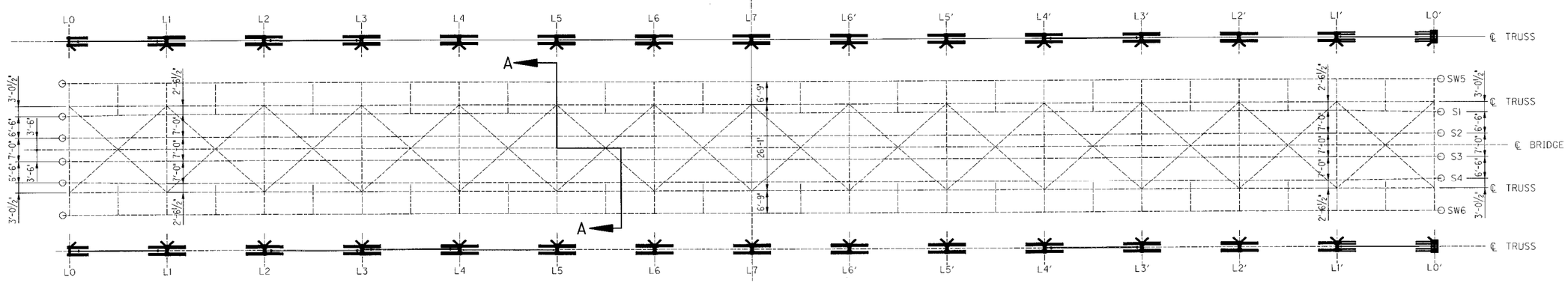

PLAN OF FLOOR SYSTEM

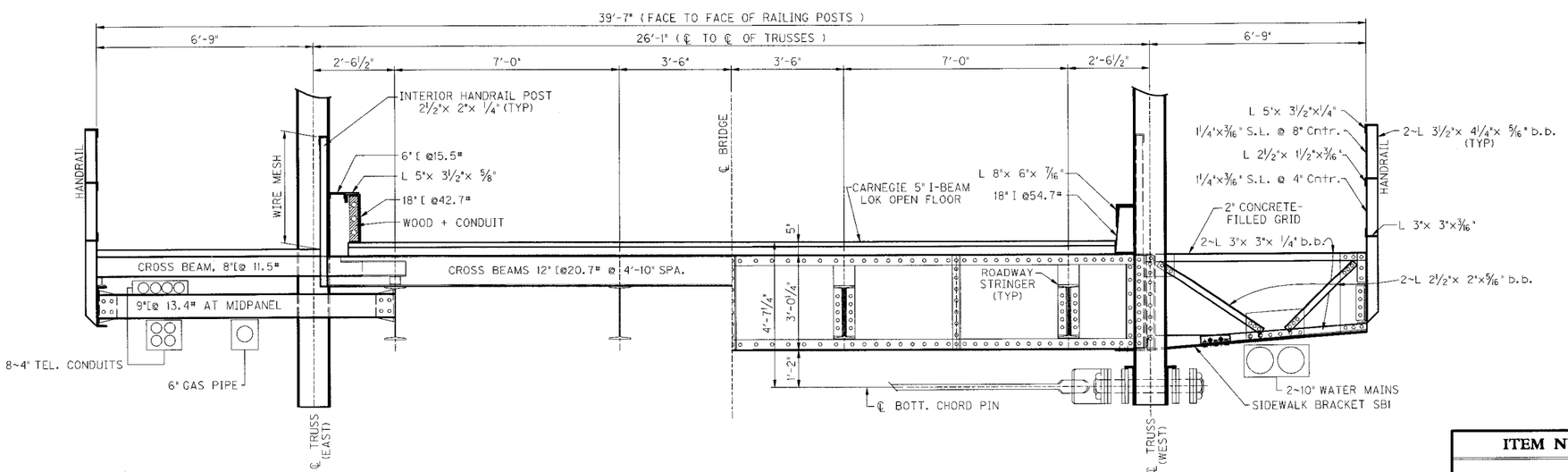

TYPICAL SECTION THRU FLOOR A–A

REVISION	DATE

DATE: JAN. 2009	CHECKED BY
DESIGNED BY:	
DETAILED BY: J. ROSE	D.E. RUST

Commonwealth of Kentucky
DEPARTMENT OF HIGHWAYS

COUNTY: **FRANKLIN**

ROUTE: **ST. CLAIR STREET** | CROSSING: **KENTUCKY RIVER**

TRUSS OVERVIEW

PREPARED BY: *PALMER ENGINEERING CO.*

SHEET NO. E-S1

DRAWING NO. 26522

ITEM NUMBER

SHEET LOCATION:
FILE NAME: ...\Dgn\ASBUILT_S01.dgn
USERNAME:
DATE: 3/23/2009 7:31:54 AM
E-SHEET NAME:

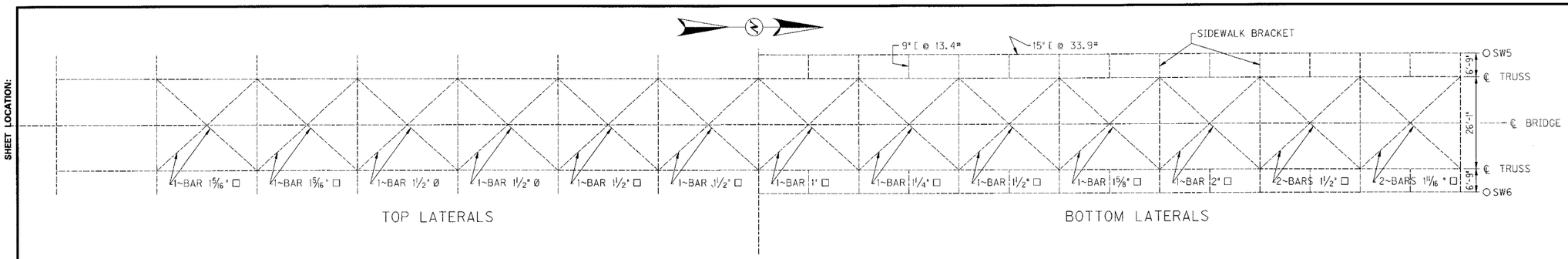

SWAY BRACING

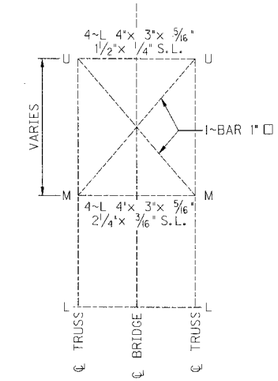

TYPICAL SWAY BRACING

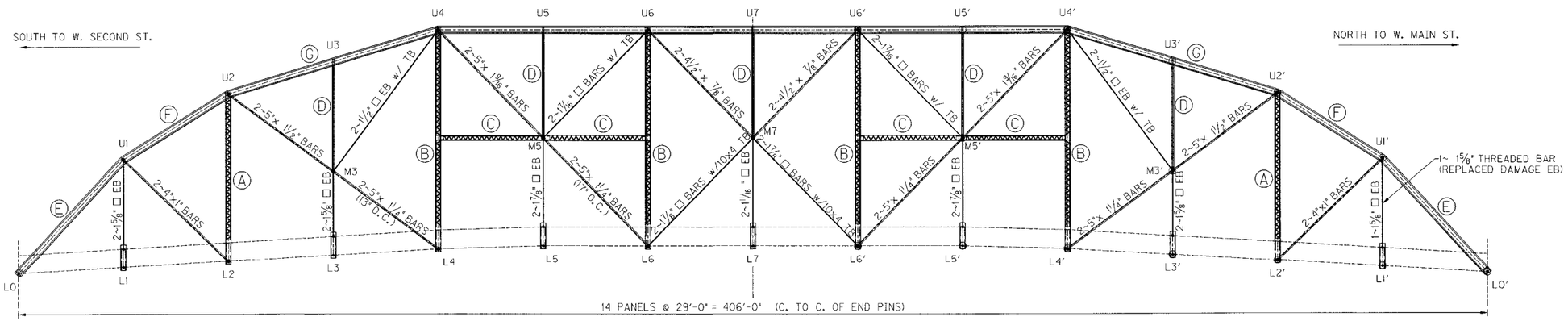

WEST TRUSS

(LOOKING DOWNSTREAM)

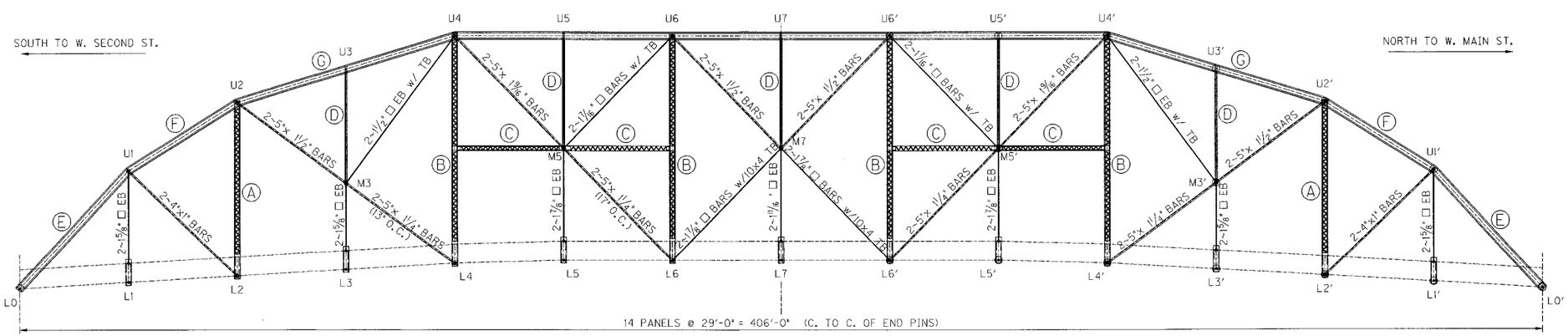

EAST TRUSS

(LOOKING DOWNSTREAM)

Ⓐ 2~12" CHANNEL X 2 5/8" @ 11" b.b.
2"x 1/4" S.L. 16" ALT. CTR.
2 PLATES 10"x 1/2"

Ⓑ 2~12" CHANNEL X 2 3/4" @ 11" b.b.
2"x 1/4" S.L. 16" ALT. CTR.
2 PLATES 10"x 1/2"

Ⓒ 4~ L 2 1/2"x 2 1/2"x 1/4"
1 1/4"x 1/4" S.L.

Ⓓ 4~ L 3 1/2"x 3"x 5/16"
1 1/2"x 1/4" S.L.

Ⓔ 1~PLATE 24"x 1/2"
2~PLATE 24"x 3/8"
2~L 3 1/2"x 3 1/2"x 1/2"
2~L 4"x 4"x 5/16"
2 3/8"x 3/8" S.L.

Ⓕ 1~PLATE 24"x 7/16"
2~PLATE 24"x 3/8"
2~L 3 1/2"x 3 1/2"x 1/2"
2~L 4"x 4"x 5/16"
2 3/8"x 3/8" S.L.

Ⓖ 1~PLATE 24"x 1/2"
2~PLATE 24"x 3/8"
2~L 3 1/2"x 3 1/2"x 1/2"
2~L 4"x 4"x 5/16"
2 3/8"x 3/8" S.L.

REVISION	DATE

DATE: JAN. 2009	CHECKED BY
DESIGNED BY:	
DETAILED BY: J. ROSE	D.E. RUST

Commonwealth of Kentucky
DEPARTMENT OF HIGHWAYS

COUNTY: **FRANKLIN**

ROUTE: **ST. CLAIR STREET** | CROSSING: **KENTUCKY RIVER**

TRUSS MEMBERS

ITEM NUMBER

PREPARED BY: *PALMER ENGINEERING CO.*

SHEET NO. E-S2

DRAWING NO. 26522

SHEET LOCATION:
FILE NAME: ...\dgn\ASBUILT_S02.dgn
USERNAME:
DATE: 3/23/2009 7:31:55 AM
E-SHEET NAME:

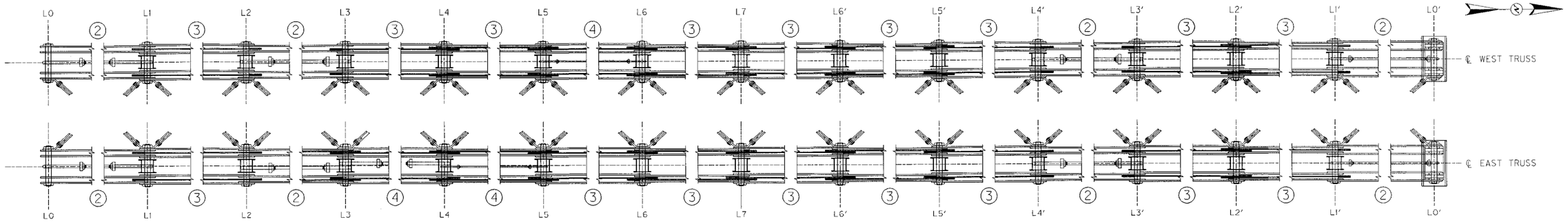

NOTE: CHORD CONFIGURATIONS SHOWN ABOVE ARE FOR SCHEMATIC PURPOSES ONLY. FOR ACTUAL CHORD CONFIGURATIONS SEE CONNECTION DETAILS

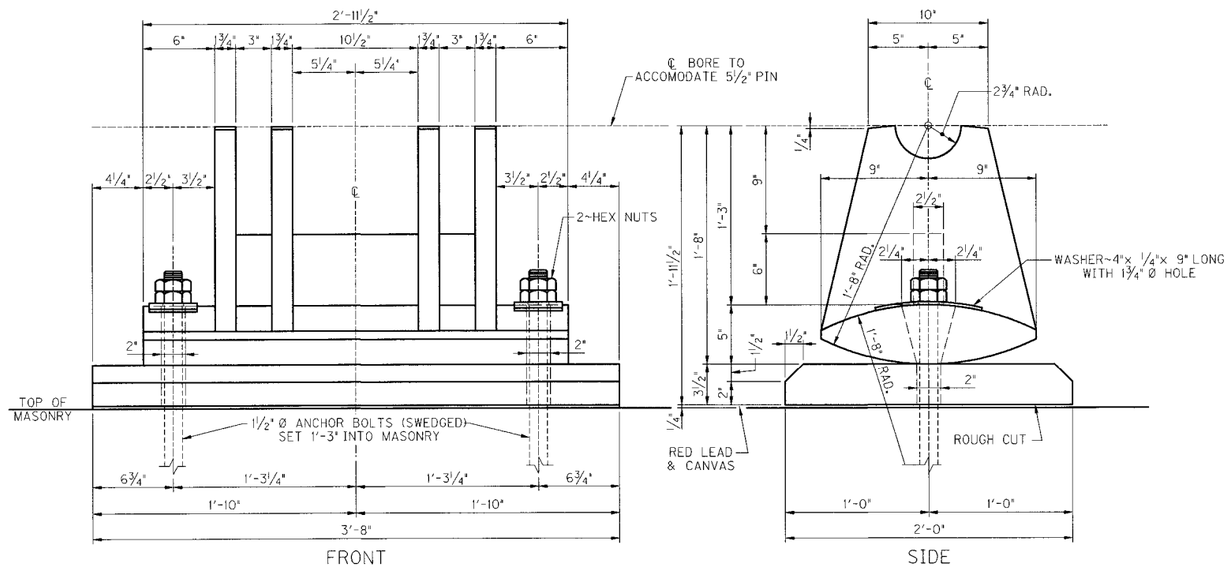

EXISTING ROCKER SHOE

(NORTH ABUTMENT)

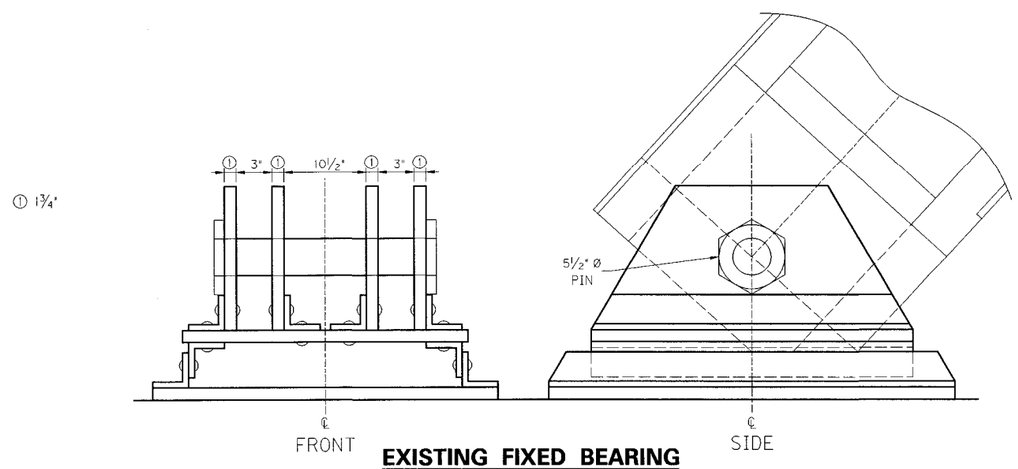

EXISTING FIXED BEARING

(SOUTH ABUTMENT)

LOWER CHORD MEMBERS

TRUSS	BAY	CONFIG.	H1	H2	T1	T2	T3	D
EAST	L0-L1	2	5"		1⅛"	1 5/16"		2¾"
EAST	L1-L2	3	5"	3½"	1⅛"	1 5/16"	¾"	
EAST	L2-L3	2	5"		1¼"	1½"		3"
EAST	L3-L4	4	5"	3½"	1 5/16"	1½"	1"	2¾"
EAST	L4-L5	4	6"	3½"	1⅜"	1⅝"	1"	1¼"
EAST	L5-L6	3	6"	3½"	1⅜"	1⅝"	¾"	
EAST	L6-L7	3	6"	3½"	1¾"	2"	¾"	
EAST	L7-L6′	3	6"	3½"	1¾"	2"	¾"	
EAST	L6′-L5′	3	6"	3½"	1⅜"	1⅝"	¾"	
EAST	L5′-L4′	3	6"	3½"	1⅜"	1⅝"	1"	
EAST	L4′-L3′	2	5"		1 5/16"	1½"		3"
EAST	L3′-L2′	3	5"	3½"	1¼"	1½"	1"	
EAST	L2′-L1′	3	5"	3½"	1⅛"	1 5/16"	¾"	
EAST	L1′-L0′	2	5"		1⅛"	1 5/16"		2"
WEST	L0-L1	2	5"		1⅛"	1 5/16"		2¼"
WEST	L1-L2	3	5"	3½"	1⅛"	1 5/16"	¾"	
WEST	L2-L3	2	5"		1¼"	1½"		2½"
WEST	L3-L4	3	5"	3½"	1 5/16"	1½"	1"	
WEST	L4-L5	3	6"	3½"	1⅜"	1⅝"	1"	
WEST	L5-L6	4	6"	3½"	1⅜"	1⅝"	¾"	1½"
WEST	L6-L7	3	6"	3½"	1¾"	2"	¾"	
WEST	L7-L6′	3	6"	3½"	1¾"	2"	¾"	
WEST	L6′-L5′	3	6"	3½"	1⅜"	1⅝"	¾"	
WEST	L5′-L4′	3	6"	3½"	1⅜"	1⅝"	1"	
WEST	L4′-L3′	2	5"		1 5/16"	1½"		2½"
WEST	L3′-L2′	3	5"	3½"	1¼"	1½"	1"	
WEST	L2′-L1′	3	5"	3½"	1⅛"	1 5/16"	¾"	
WEST	L1′-L0′	2	5"		1⅛"	1 5/16"		2¾"

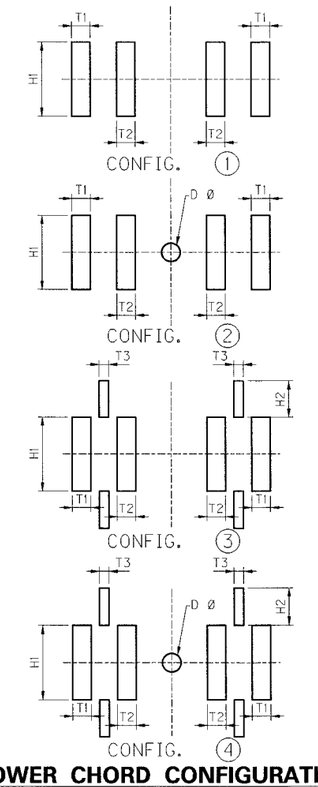

LOWER CHORD CONFIGURATIONS

REVISION	DATE

DATE: JAN. 2009 — CHECKED BY

DESIGNED BY:

DETAILED BY: J. ROSE — D.E. RUST

Commonwealth of Kentucky
DEPARTMENT OF HIGHWAYS

COUNTY: **FRANKLIN**

ROUTE: **ST. CLAIR STREET** — CROSSING: **KENTUCKY RIVER**

LOWER CHORDS / BEARINGS

ITEM NUMBER

PREPARED BY: *PALMER ENGINEERING CO.*

SHEET NO. E-S3

DRAWING NO. 26522

SHEET LOCATION:

FILE NAME: ...\dgn\ASBUILT_S03.dgn

USERNAME:

DATE: 3/23/2009 7:31:55 AM

E-SHEET NAME:

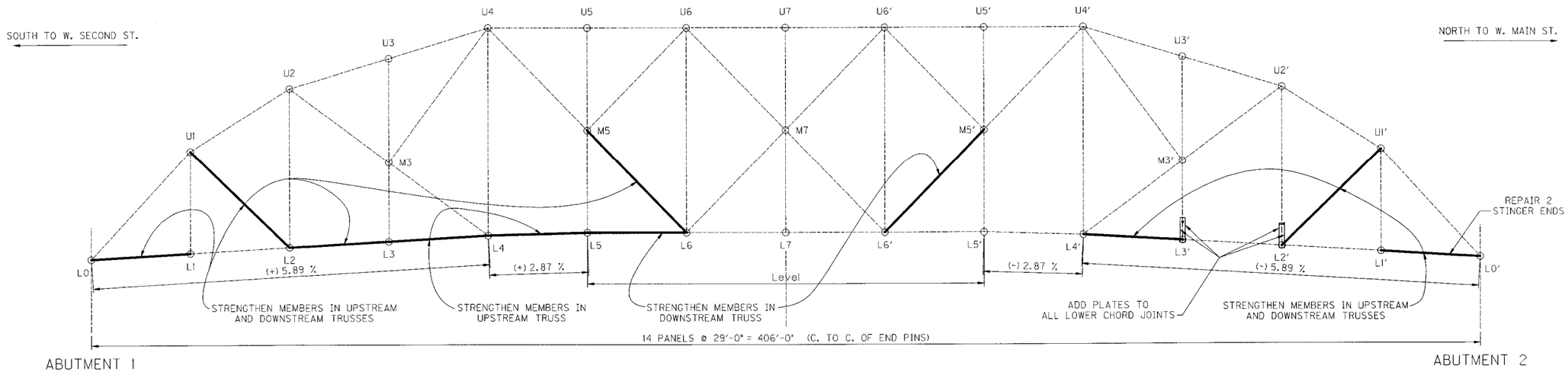

ELEVATION

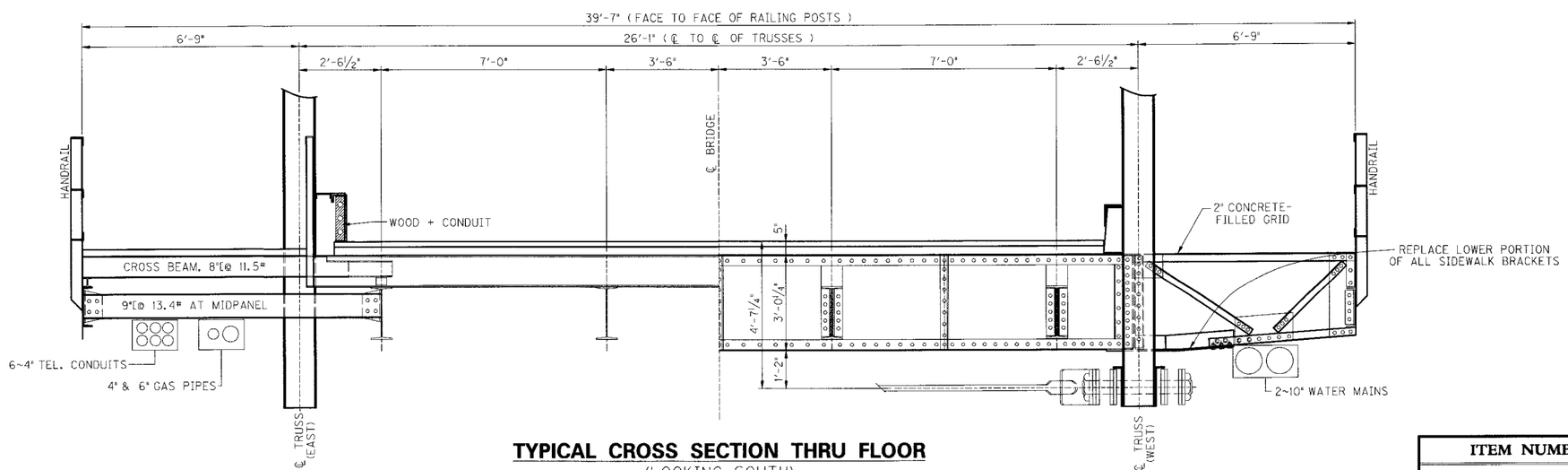

TYPICAL CROSS SECTION THRU FLOOR

(LOOKING SOUTH)

REVISION	DATE

DATE: JAN. 2009	CHECKED BY
DESIGNED BY:	
DETAILED BY: J. ROSE	D.E. RUST

Commonwealth of Kentucky
DEPARTMENT OF HIGHWAYS

COUNTY: **FRANKLIN**

ROUTE: **ST. CLAIR STREET** | CROSSING: **KENTUCKY RIVER**

1987 REHAB

ITEM NUMBER

PREPARED BY: *PALMER ENGINEERING CO.*

SHEET NO. E-S4

DRAWING NO. 26522

SHEET LOCATION:

FILE NAME: ...\dgn\ASBUILT_S04.dgn

USERNAME:

DATE: 3/23/2009 7:31:56 AM

E-SHEET NAME:

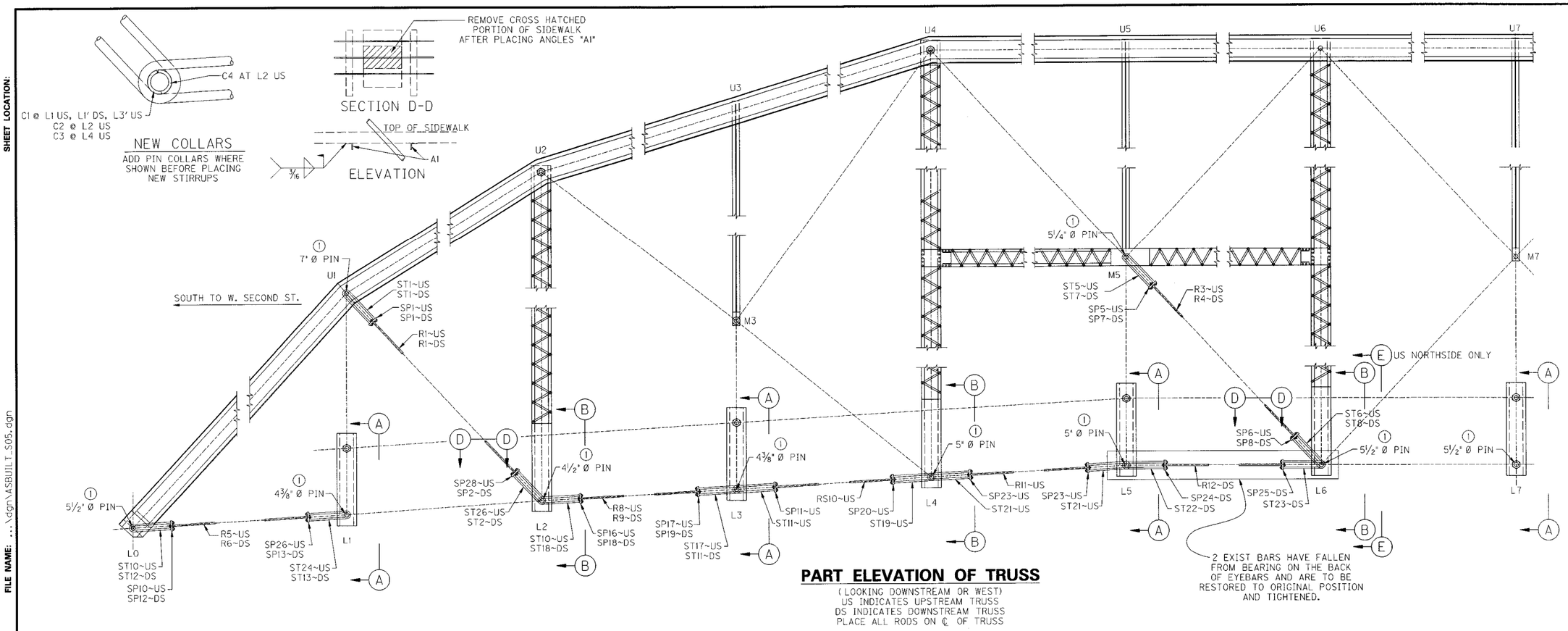

PART ELEVATION OF TRUSS

(LOOKING DOWNSTREAM OR WEST)
US INDICATES UPSTREAM TRUSS
DS INDICATES DOWNSTREAM TRUSS
PLACE ALL RODS ON ℄ OF TRUSS

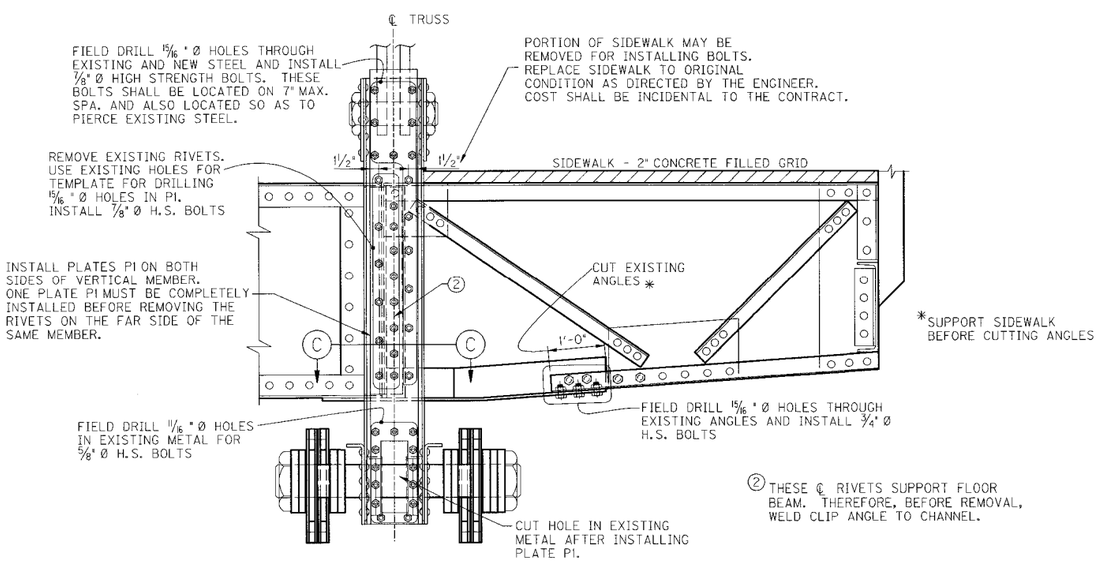

* SUPPORT SIDEWALK BEFORE CUTTING ANGLES

(2) THESE ℄ RIVETS SUPPORT FLOOR BEAM. THEREFORE, BEFORE REMOVAL, WELD CLIP ANGLE TO CHANNEL.

SECTION A–A

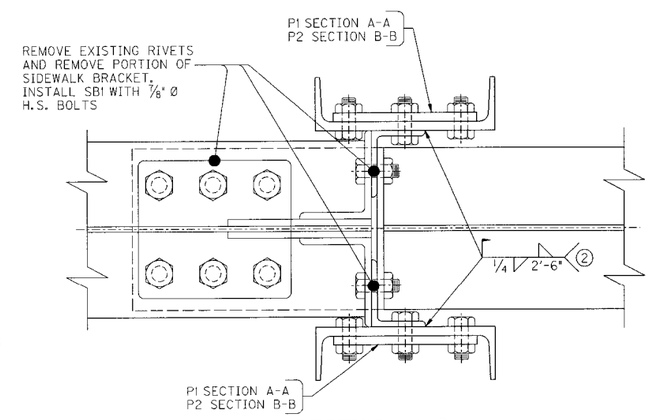

SECTION C–C

(1) THESE PIN DIAMETERS (OR COLLAR DIAMETERS) MUST BE CHECKED BEFORE FABRICATING THE NEW STIRRUPS AND STIRRUP PLATES. THE STIRRUP AND STIRRUP PLATES DETAILED IN THESE PLANS ARE TO ACCOMODATE THE PIN SIZE SHOWN AND MUST BE ADJUSTED FOR ANY VARIENCE.

SEE SHEET S6-EX FOR SECTION B-B

REVISION	DATE

DATE: JAN. 2009	CHECKED BY
DESIGNED BY:	
DETAILED BY: J. ROSE	D.E. RUST

Commonwealth of Kentucky
DEPARTMENT OF HIGHWAYS

COUNTY: **FRANKLIN**

ROUTE: **ST. CLAIR STREET** | CROSSING: **KENTUCKY RIVER**

1987 – REHAB

ITEM NUMBER

PREPARED BY: *PALMER ENGINEERING CO.*

SHEET NO. E-S5

DRAWING NO. 26522

E-SHEET NAME: FILE NAME: ...\dgn\ASBUILT_S05.dgn USERNAME: DATE: 3/23/2009 7:31:56 AM SHEET LOCATION:

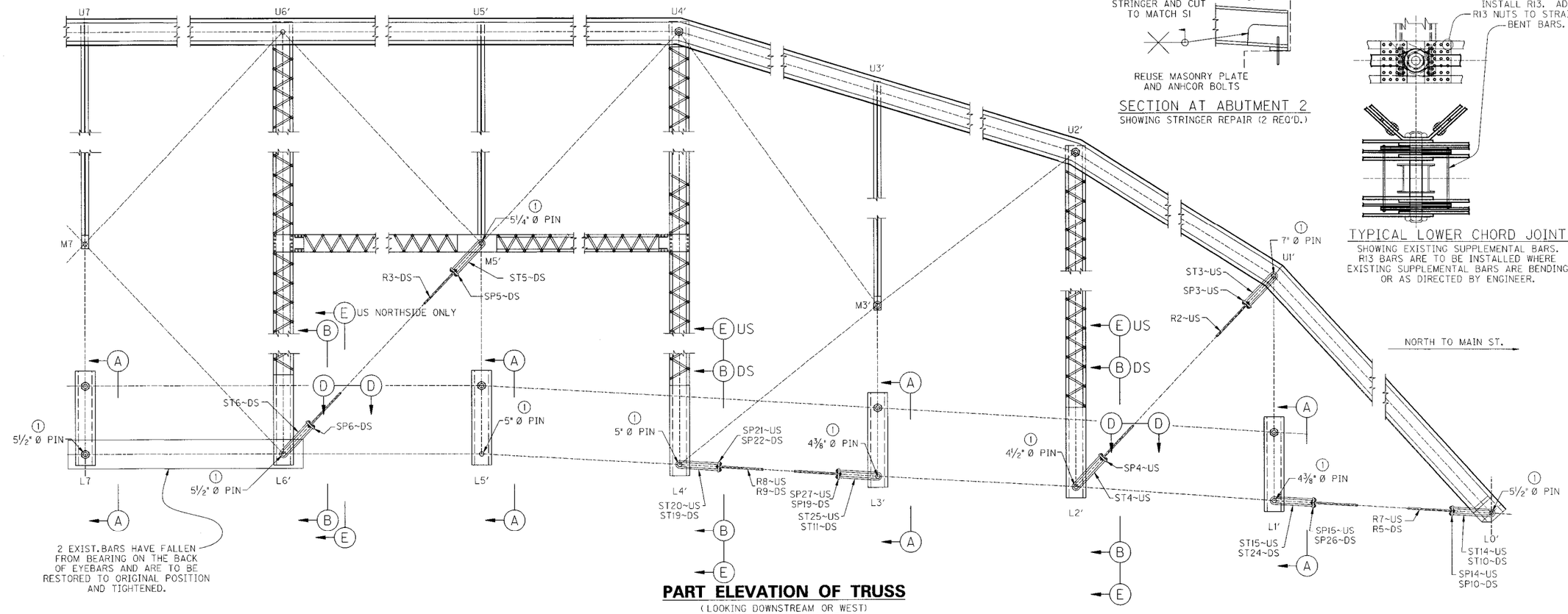

PART ELEVATION OF TRUSS

(LOOKING DOWNSTREAM OR WEST)
US INDICATES UPSTREAM TRUSS
DS INDICATES DOWNSTREAM TRUSS
PLACE ALL RODS ON ℄ OF TRUSS

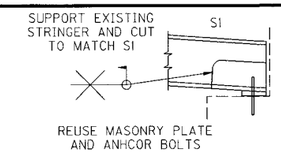

SECTION AT ABUTMENT 2

SHOWING STRINGER REPAIR (2 REQ'D.)

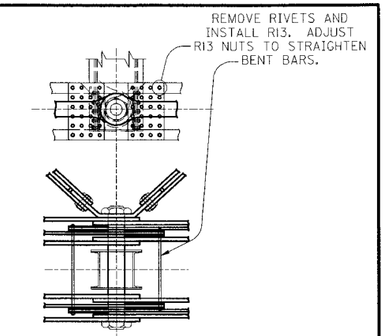

TYPICAL LOWER CHORD JOINT

SHOWING EXISTING SUPPLEMENTAL BARS. R13 BARS ARE TO BE INSTALLED WHERE EXISTING SUPPLEMENTAL BARS ARE BENDING OR AS DIRECTED BY ENGINEER.

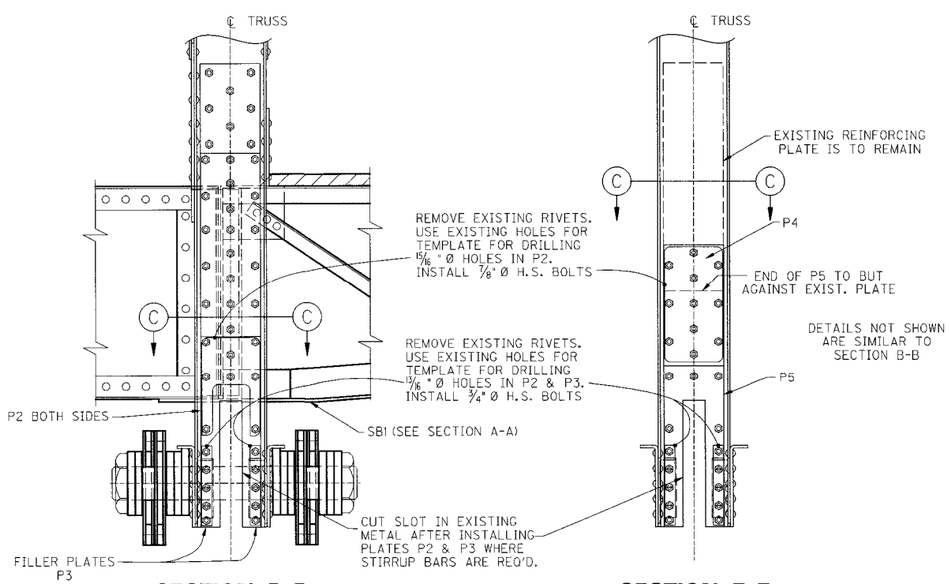

SECTION B–B

SECTION E–E

① THESE PIN DIAMETERS (OR COLLAR DIAMETERS) MUST BE CHECKED BEFORE FABRICATING THE NEW STIRRUPS AND STIRRUP PLATES. THE STIRRUP AND STIRRUP PLATES DETAILED IN THESE PLANS ARE TO ACCOMODATE THE PIN SIZE SHOWN AND MUST BE ADJUSTED FOR ANY VARIENCE.

SEE SHEET S5-EX FOR SECTION A-A, C-C, D-D

REVISION	DATE

DATE: JAN. 2009	CHECKED BY
DESIGNED BY:	
DETAILED BY: J. ROSE	D.E. RUST

Commonwealth of Kentucky
DEPARTMENT OF HIGHWAYS

COUNTY: **FRANKLIN**

ROUTE: **ST. CLAIR STREET** | CROSSING: **KENTUCKY RIVER**

1987 – REHAB

ITEM NUMBER

PREPARED BY: *PALMER ENGINEERING CO.*

SHEET NO. E-S6

DRAWING NO. 26522

SHEET LOCATION:
FILE NAME: ...\dgn\ASBUILT_S06.dgn
USERNAME:
DATE: 3/23/2009 7:31:57 AM
E-SHEET NAME:

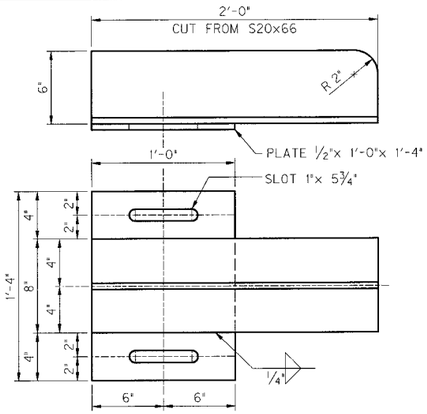

STRINGER S1

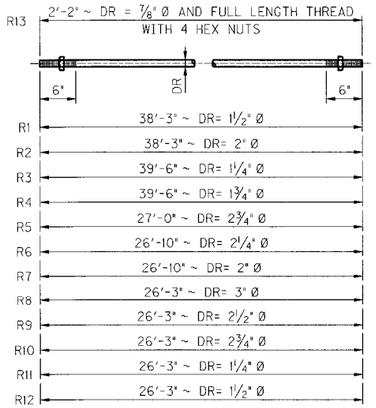

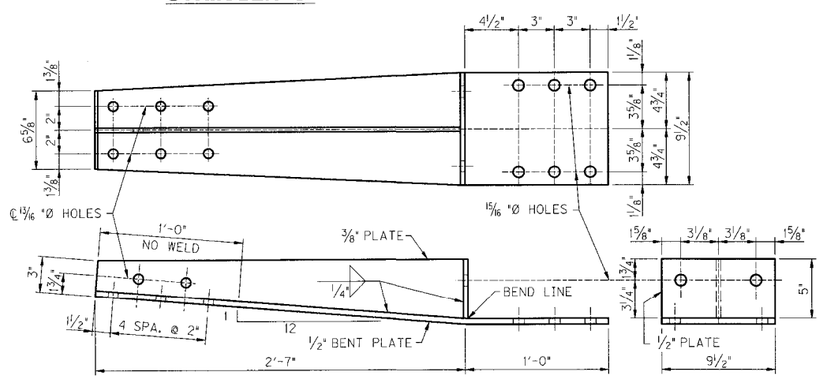

SIDEWALK BRACKET SB1

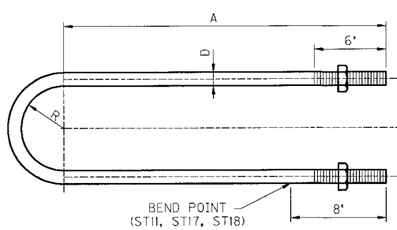

STIRRUPS ST1 – ST26

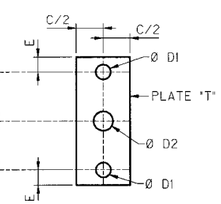

PLATES SP1 – SP28

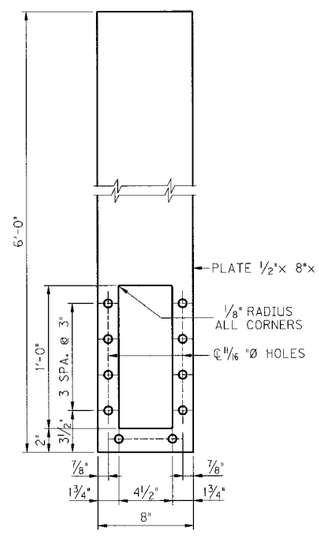

PLATE P1

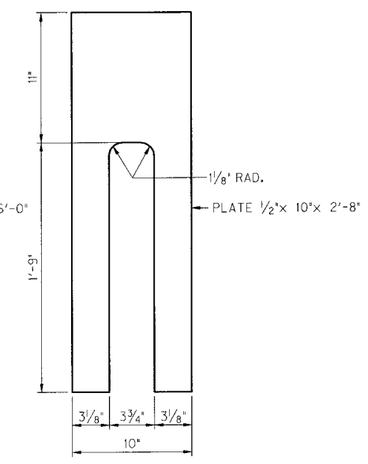

PLATE P2

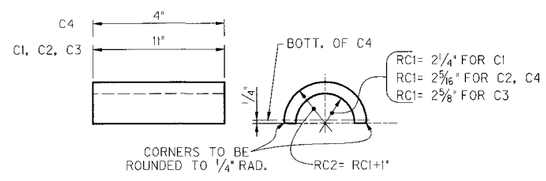

COLLARS C1 – C4

STIRRUP AND PLATE DIMENSIONS

MARK	D	A	B	R
ST1	1 1/8"	1'-6"	8 1/4"	3 9/16"
ST2	1 1/8"	2'-3"	5 3/4"	2 5/16"
ST3	1 1/2"	1'-6"	8 5/8"	3 9/16"
ST4	1 1/2"	2'-3"	6 1/8"	2 5/16"
ST5	1"	1'-6"	6 3/8"	2 11/16"
ST6	1"	2'-3"	6 5/8"	2 13/16"
ST7	1 1/4"	1'-6"	6 5/8"	2 11/16"
ST8	1 1/4"	2'-3"	6 7/8"	2 13/16"
ST10	2"	1'-6"	7 5/8"	2 13/16"
ST11	2"	2'-3"	6 7/8"	2 1/4"
ST12	1 3/4"	1'-6"	7 3/8"	2 13/16"
ST13	1 3/4"	2'-3"	6 1/4"	2 1/4"
ST14	1 1/2"	1'-6"	7 1/8"	2 13/16"
ST15	1 1/2"	2'-3"	6"	2 1/4"
ST16	2 1/4"	2'-3"	8 7/8"	3 5/16"
ST17	2 1/4"	2'-3"	7 7/8"	2 1/4"
ST18	2"	2'-3"	6 7/8"	2 5/16"
ST19	2"	2'-3"	7 1/8"	2 9/16"
ST20	2 1/4"	2'-3"	9 3/8"	3 9/16"
ST21	1"	2'-3"	6 7/8"	2 9/16"
ST22	1 1/8"	2'-3"	6 1/4"	2 7/16"
ST23	1 1/8"	2'-3"	6 3/4"	2 11/16"
ST24	2"	2'-3"	8 1/2"	3 1/4"
ST25	2 1/4"	2'-3"	8 3/4"	3 1/4"
ST26	1 1/8"	2'-3"	7 3/4"	3 3/16"

MARK	C	E	T	D1	D2	B
SP1	4 1/2"	1 1/4"	2"	1 1/4"	1 5/8"	8 1/4"
SP2	4 1/2"	1 1/4"	2"	1 1/4"	1 5/8"	5 3/4"
SP3	5 1/4"	1 1/2"	2 1/2"	1 5/8"	2 1/8"	8 5/8"
SP4	5 1/4"	1 1/2"	2 1/2"	1 5/8"	2 1/8"	6 1/8"
SP5	3 3/4"	1 1/4"	2"	1 1/8"	1 3/8"	6 3/8"
SP6	3 3/4"	1 1/4"	2"	1 1/8"	1 3/8"	6 5/8"
SP7	4 1/2"	1 1/2"	2"	1 3/8"	1 7/8"	6 5/8"
SP8	4 1/2"	1 1/2"	2"	1 3/8"	1 7/8"	6 7/8"
SP10	4 3/4"	2"	3"	2 1/8"	2 7/8"	7 5/8"
SP11	4 3/4"	2"	3"	2 1/8"	2 7/8"	6 7/8"
SP12	5 1/4"	1 3/4"	2 1/2"	1 7/8"	2 3/8"	7 7/8"
SP13	5 1/4"	1 3/4"	2 1/2"	1 7/8"	2 3/8"	6 1/4"
SP14	5 1/4"	1 1/2"	2 1/2"	1 5/8"	2 1/8"	7 1/8"
SP15	4 5/8"	1 1/2"	2"	1 5/8"	2 1/8"	6"
SP16	7 1/4"	2 1/4"	3"	2 3/8"	3 1/8"	8 7/8"
SP17	7 1/4"	2 1/4"	3"	2 3/8"	3 1/8"	7 7/8"
SP18	5 1/2"	2"	2 1/2"	2 1/8"	2 5/8"	6 7/8"
SP19	5 1/2"	2"	2 1/2"	2 1/8"	2 5/8"	6 7/8"
SP20	4 3/4"	2"	3"	2 1/8"	2 7/8"	7 1/8"
SP21	7 1/4"	2 1/4"	3"	2 3/8"	3 1/8"	9 3/8"
SP22	5 1/2"	2"	2 1/2"	2 1/8"	2 5/8"	7 1/8"
SP23	3 3/4"	1 1/4"	2"	1 1/8"	1 3/8"	6 1/8"
SP24	4 1/2"	1 1/2"	2"	1 1/4"	1 5/8"	6 1/4"
SP25	4 1/2"	1 1/2"	2"	1 1/4"	1 5/8"	6 3/4"
SP26	6 1/4"	2"	3"	2 1/8"	2 7/8"	8 1/2"
SP27	7 1/4"	2 1/4"	3"	2 3/8"	3 1/8"	8 3/4"
SP28	4 1/2"	1 1/4"	2"	1 1/4"	1 5/8"	7 3/4"

STRUCTURAL STEEL

MARK	NO.	DESCRIPTION	MARK	NO.	DESCRIPTION
R1	2	ROD (SEE DETAIL)	SP1	2	STIRRUP PLATE (SEE DETAIL)
R2	1	ROD (SEE DETAIL)	SP2	1	STIRRUP PLATE (SEE DETAIL)
R3	2	ROD (SEE DETAIL)	SP3	1	STIRRUP PLATE (SEE DETAIL)
R4	1	ROD (SEE DETAIL)	SP4	1	STIRRUP PLATE (SEE DETAIL)
R5	2	ROD (SEE DETAIL)	SP5	2	STIRRUP PLATE (SEE DETAIL)
R6	1	ROD (SEE DETAIL)	SP6	2	STIRRUP PLATE (SEE DETAIL)
R7	1	ROD (SEE DETAIL)	SP7	1	STIRRUP PLATE (SEE DETAIL)
R8	2	ROD (SEE DETAIL)	SP8	1	STIRRUP PLATE (SEE DETAIL)
R9	2	ROD (SEE DETAIL)	SP10	2	STIRRUP PLATE (SEE DETAIL)
R10	1	ROD (SEE DETAIL)	SP11	1	STIRRUP PLATE (SEE DETAIL)
R11	1	ROD (SEE DETAIL)	SP12	1	STIRRUP PLATE (SEE DETAIL)
R12	1	ROD (SEE DETAIL)	SP13	1	STIRRUP PLATE (SEE DETAIL)
R13	24	ROD (SEE DETAIL)	SP14	1	STIRRUP PLATE (SEE DETAIL)
ST1	2	STIRRUP (SEE DETAIL)	SP15	1	STIRRUP PLATE (SEE DETAIL)
ST2	1	STIRRUP (SEE DETAIL)	SP16	1	STIRRUP PLATE (SEE DETAIL)
ST3	1	STIRRUP (SEE DETAIL)	SP17	1	STIRRUP PLATE (SEE DETAIL)
ST4	1	STIRRUP (SEE DETAIL)	SP18	1	STIRRUP PLATE (SEE DETAIL)
ST5	2	STIRRUP (SEE DETAIL)	SP19	2	STIRRUP PLATE (SEE DETAIL)
ST6	2	STIRRUP (SEE DETAIL)	SP20	1	STIRRUP PLATE (SEE DETAIL)
ST7	1	STIRRUP (SEE DETAIL)	SP21	1	STIRRUP PLATE (SEE DETAIL)
ST8	1	STIRRUP (SEE DETAIL)	SP22	1	STIRRUP PLATE (SEE DETAIL)
ST10	2	STIRRUP (SEE DETAIL)	SP23	2	STIRRUP PLATE (SEE DETAIL)
ST11	3	STIRRUP (SEE DETAIL)	SP24	1	STIRRUP PLATE (SEE DETAIL)
ST12	1	STIRRUP (SEE DETAIL)	SP25	1	STIRRUP PLATE (SEE DETAIL)
ST13	1	STIRRUP (SEE DETAIL)	SP26	2	STIRRUP PLATE (SEE DETAIL)
ST14	1	STIRRUP (SEE DETAIL)	SP27	1	STIRRUP PLATE (SEE DETAIL)
ST15	1	STIRRUP (SEE DETAIL)	SP28	1	STIRRUP PLATE (SEE DETAIL)
ST16	1	STIRRUP (SEE DETAIL)			
ST17	1	STIRRUP (SEE DETAIL)	A1	12	L ~1/4"x 1 1/2"x 1 1/2" x 2'-0" (UNDER SIDEWALK)
ST18	1	STIRRUP (SEE DETAIL)	P1	28	PLATE 1/2"x 8"x 6'-0" (SEE DETAIL)
ST19	2	STIRRUP (SEE DETAIL)	P2	18	PLATE 1/2"x 10"x 2'-8" (SEE DETAIL)
ST20	1	STIRRUP (SEE DETAIL)	P3	36	FILLER PLATE 1/2"x 3 1/8"x 1'-4"
ST21	2	STIRRUP (SEE DETAIL)	S1	2	STRINGER (SEE DETAIL)
ST22	1	STIRRUP (SEE DETAIL)	SB1	26	SIDEWALK BRACKET (SEE DETAIL)
ST23	1	STIRRUP (SEE DETAIL)	P4	6	SPLICE PLATE 1/2"x 10"x 1'-4"
ST24	2	STIRRUP (SEE DETAIL)	P5	6	PLATE 1/2"x 10"x 2'-7"
ST25	1	STIRRUP (SEE DETAIL)	C1	3	COLLAR (SEE DETAIL)
ST26	1	STIRRUP (SEE DETAIL)	C2	1	COLLAR (SEE DETAIL)
			C3	1	COLLAR (SEE DETAIL)
			C4	1	COLLAR (SEE DETAIL)

REVISION	DATE

DATE: JAN. 2009	CHECKED BY
DESIGNED BY:	
DETAILED BY: J. ROSE	D.E. RUST

Commonwealth of Kentucky
DEPARTMENT OF HIGHWAYS

COUNTY: **FRANKLIN**

ROUTE: **ST. CLAIR STREET** | CROSSING: **KENTUCKY RIVER**

1987 – REHAB

ITEM NUMBER

PREPARED BY: *PALMER ENGINEERING CO.*

SHEET NO. E-S7

DRAWING NO. **26522**

SHEET LOCATION:
FILE NAME: ...\dgn\ASBUILT_S07.dgn
USERNAME:
DATE: 3/23/2009 7:31:58 AM
E-SHEET NAME:

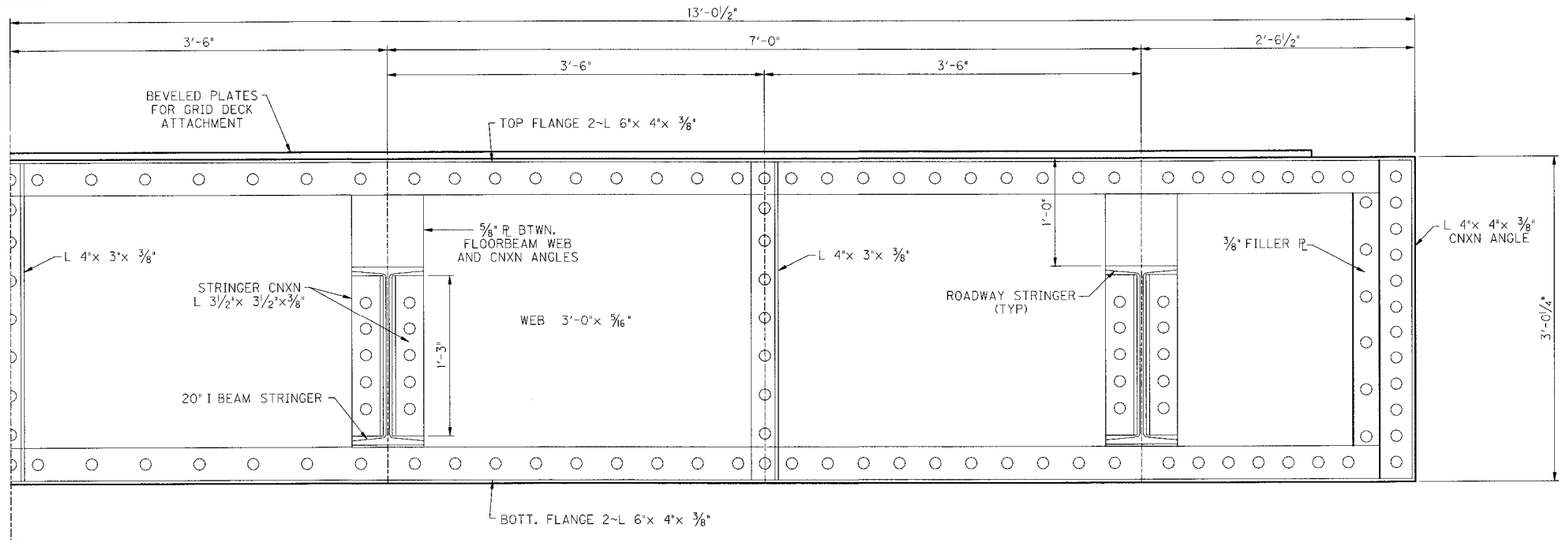

FLOORBEAM ELEVATION

(LOOKING AHEAD)

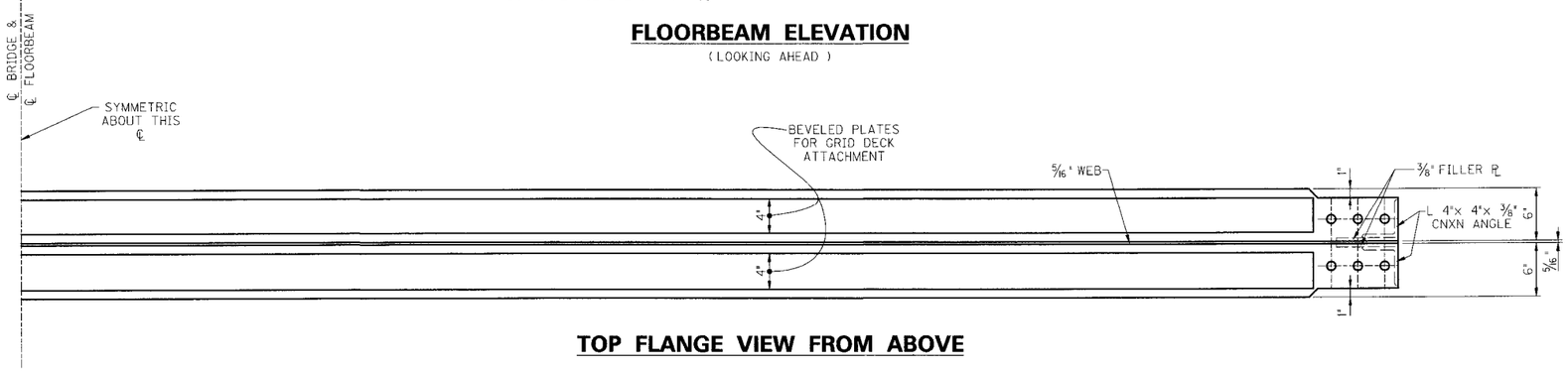

TOP FLANGE VIEW FROM ABOVE

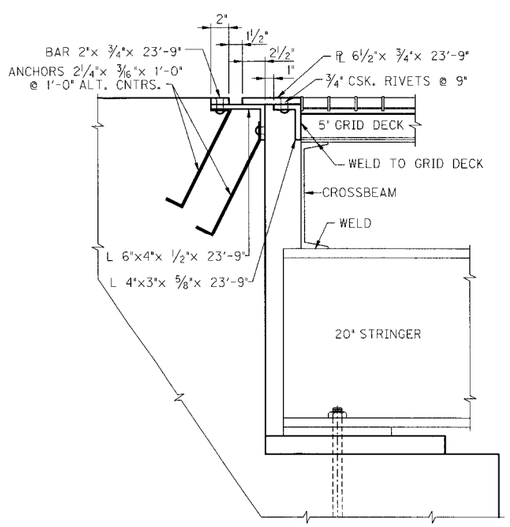

SECTION THRU SOUTH ABUTMENT

(SHOWING FIXED END)

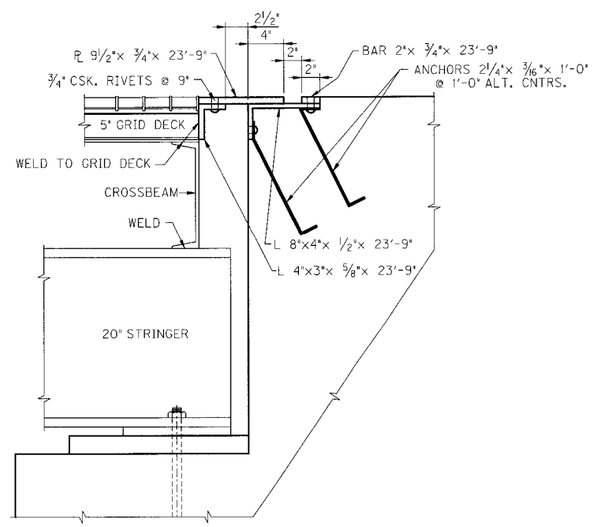

SECTION THRU NORTH ABUTMENT

(SHOWING EXPANSION DEVICE)

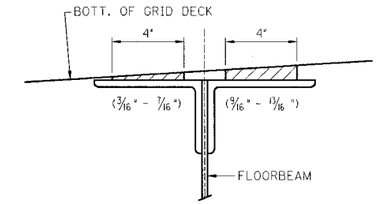

L1 THRU L3, L1' THRU L3'

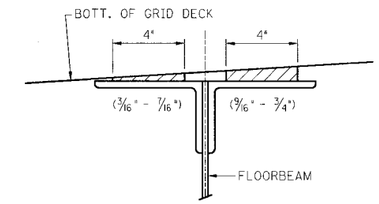

L4, L4'

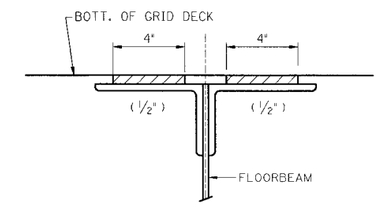

L5, L5', L6, L6', L7

BEVELED PLATES FOR GRID DECK ATTACHMENT

REVISION	DATE

DATE: JAN. 2009	CHECKED BY
DESIGNED BY:	
DETAILED BY: J. ROSE	D.E. RUST

Commonwealth of Kentucky
DEPARTMENT OF HIGHWAYS

COUNTY: FRANKLIN

ROUTE: ST. CLAIR STREET | CROSSING: KENTUCKY RIVER

FLOORBEAMS / EXP. JOINTS

ITEM NUMBER

PREPARED BY: PALMER ENGINEERING CO.

SHEET NO. E-S8

DRAWING NO. 26522

SHEET LOCATION:

FILE NAME: ...\dgn\ASBUILT_S08.dgn

USERNAME:

DATE: 3/23/2009 7:31:58 AM

E-SHEET NAME:

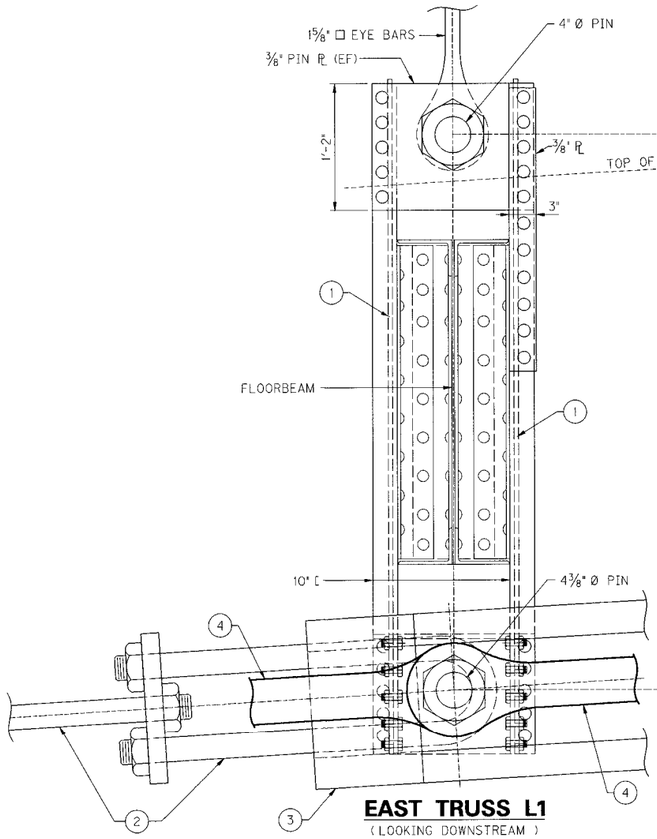

EAST TRUSS L1
(LOOKING DOWNSTREAM)

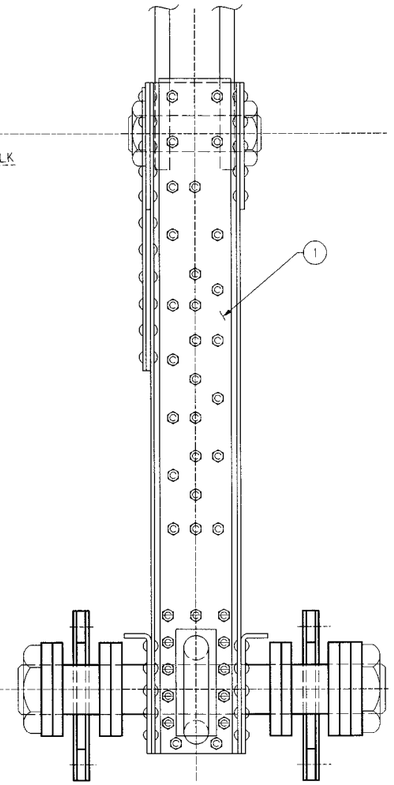

EAST TRUSS L1
(LOOKING SOUTH)

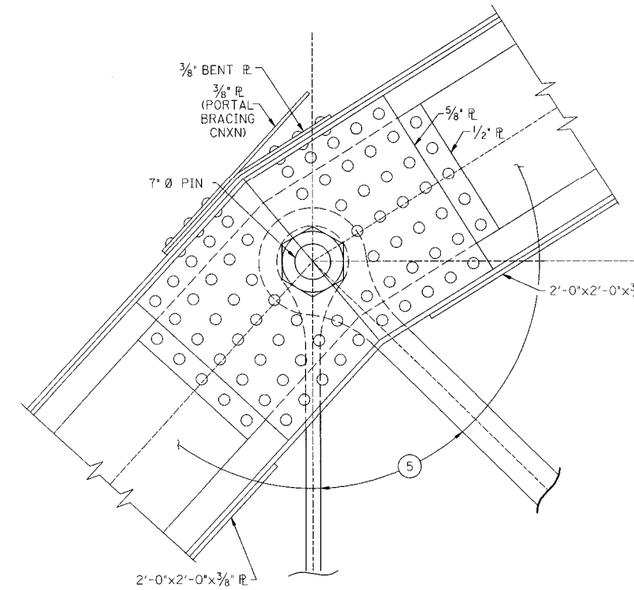

EAST TRUSS U1
(LOOKING DOWNSTREAM)

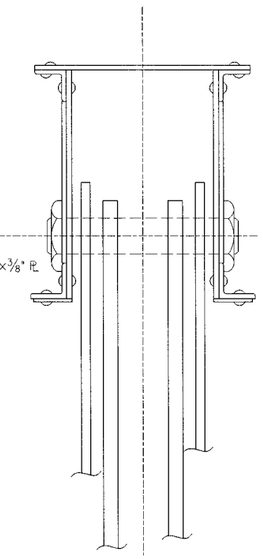

EAST TRUSS U1
(LOOKING SOUTH)

1. PLATE P1 PREVIOUSLY INSTALLED IN 1987 REHAB. SEE SHEETS S5-EX THRU S7-EX. BOLT PATTERNS BASED ON ORIGINAL RIVETS AND 1987 PLANS, BUT VARY.
2. ROD AND STIRRUP ASSEMBLY INSTALLED IN 1987 REHAB. SEE SHEETS S5-EX THRU S7-EX FOR DESIGNATION AND DIMENSIONS.
3. YOKE ASSEMBLY INSTALLED IN 1938 REHAB. SEE SHEET S3-EX.
4. LOWER CHORD EYEBARS SEE SHEET S3-EX.
5. TRUSS MEMBERS SEE SHEET S2-EX.

NOTE: THE ORIGINAL COMPONENTS OF THE CONNECTIONS ARE SYMETRIC ABOUT PANEL POINT 7 (CONNECTIONS AT PP1' ARE MIRROR IMAGES OF PP1), BUT THE RETROFITS WERE NOT CONDUCTED SYMETRICALLY. SEE SHEETS S3-EX AND S4-EX FOR DETAILS.

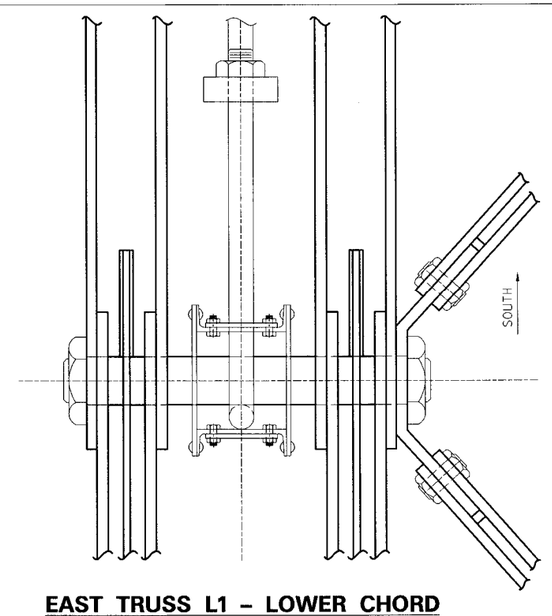

EAST TRUSS L1 – LOWER CHORD

REVISION	DATE

DATE: JAN. 2009	CHECKED BY
DESIGNED BY:	
DETAILED BY: J. ROSE	D.E. RUST

Commonwealth of Kentucky
DEPARTMENT OF HIGHWAYS

COUNTY: FRANKLIN

ROUTE: ST. CLAIR STREET | CROSSING: KENTUCKY RIVER

EAST TRUSS L1 CONNECTIONS

ITEM NUMBER

PREPARED BY: PALMER ENGINEERING CO.

SHEET NO. E-S9

DRAWING NO. 26522

SHEET LOCATION:

FILE NAME: ...\dgn\ASBUILT_S09.dgn

USERNAME:

DATE: 3/23/2009 7:31:59 AM

E-SHEET NAME:

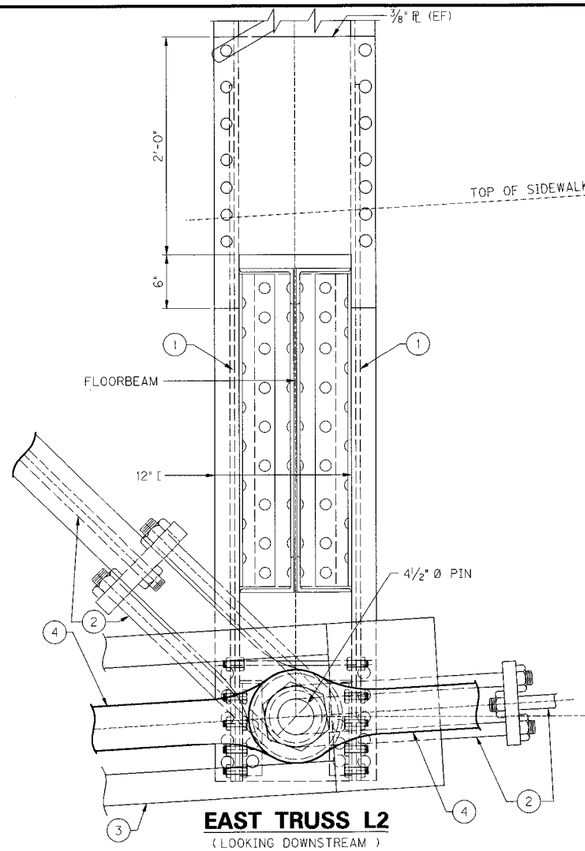

EAST TRUSS L2
(LOOKING DOWNSTREAM)

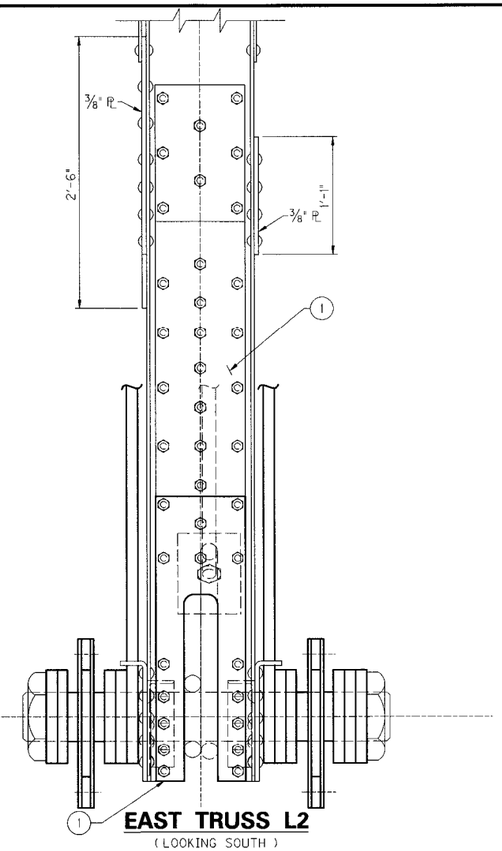

EAST TRUSS L2
(LOOKING SOUTH)

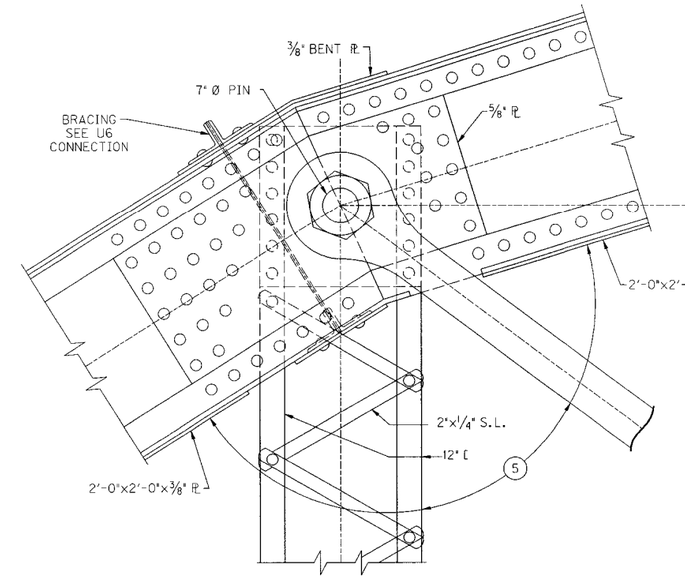

EAST TRUSS U2
(LOOKING DOWNSTREAM)

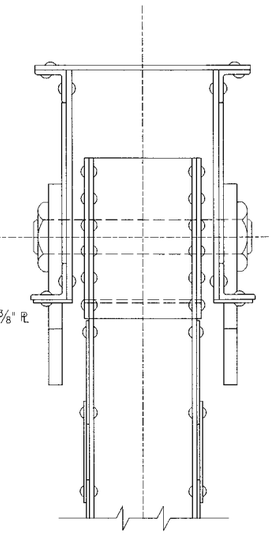

EAST TRUSS U2
(LOOKING SOUTH)

1. PLATES P2 AND P3 PREVIOUSLY INSTALLED IN 1987 REHAB. SEE SHEETS S5-EX THRU S7-EX. BOLT PATTERNS BASED ON ORIGINAL RIVETS AND 1987 PLANS, BUT VARY.
2. ROD AND STIRRUP ASSEMBLY INSTALLED IN 1987 REHAB. SEE SHEETS S5-EX THRU S7-EX FOR DESIGNATION AND DIMENSIONS.
3. YOKE ASSEMBLY INSTALLED IN 1938 REHAB. SEE SHEET S3-EX.
4. LOWER CHORD EYEBARS SEE SHEET S3-EX.
5. TRUSS MEMBERS SEE SHEET S2-EX.

NOTE: THE ORIGINAL COMPONENTS OF THE CONNECTIONS ARE SYMETRIC ABOUT PANEL POINT 7 (CONNECTIONS AT PP2' ARE MIRROR IMAGES OF PP2), BUT THE RETROFITS WERE NOT CONDUCTED SYMETRICALLY. SEE SHEETS S3-EX AND S4-EX FOR DETAILS.

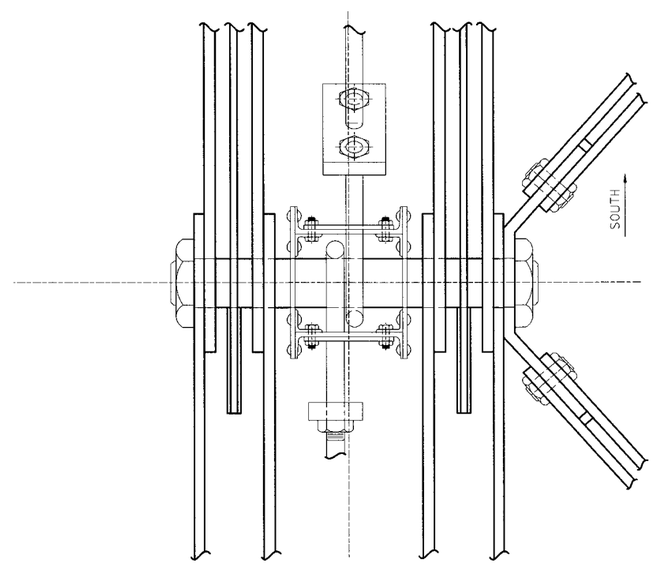

EAST TRUSS L2 - LOWER CHORD

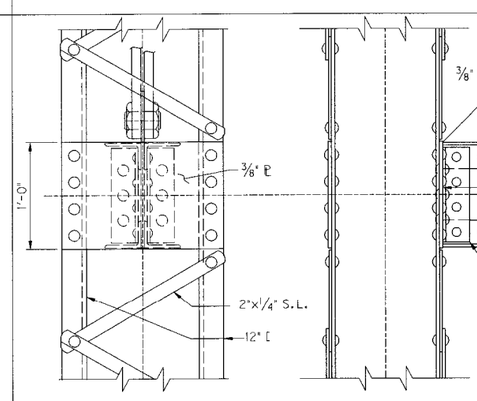

EAST TRUSS M2
(LOOKING DOWNSTREAM)

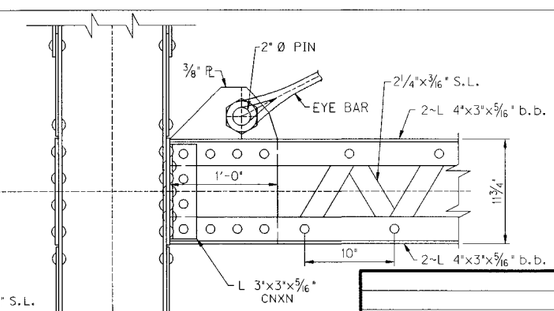

EAST TRUSS M2
(LOOKING SOUTH)

REVISION	DATE

DATE: JAN. 2009	CHECKED BY
DESIGNED BY:	
DETAILED BY: J. ROSE	D.E. RUST

Commonwealth of Kentucky
DEPARTMENT OF HIGHWAYS

COUNTY: **FRANKLIN**

ROUTE: **ST. CLAIR STREET** | CROSSING: **KENTUCKY RIVER**

EAST TRUSS L2 CONNECTIONS

ITEM NUMBER

PREPARED BY: *PALMER ENGINEERING CO.*

SHEET NO. E-S10
DRAWING NO. 26522

SHEET LOCATION:
FILE NAME: ...\dgn\ASBUILT_S10.dgn
USERNAME:
DATE: 3/23/2009 7:31:59 AM
E-SHEET NAME:

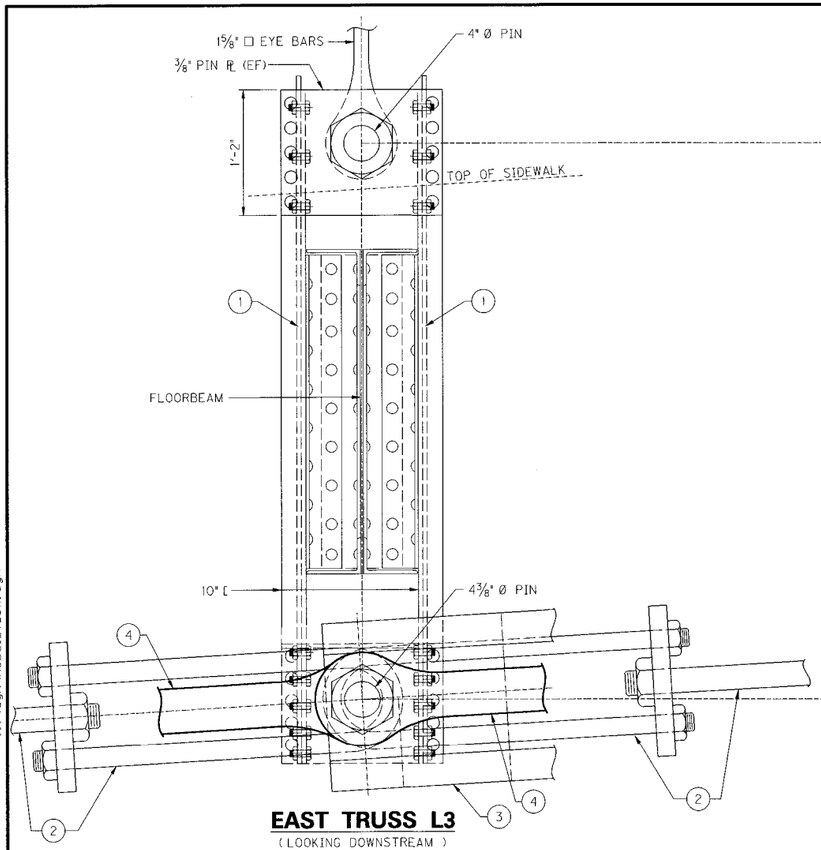

EAST TRUSS L3
(LOOKING DOWNSTREAM)

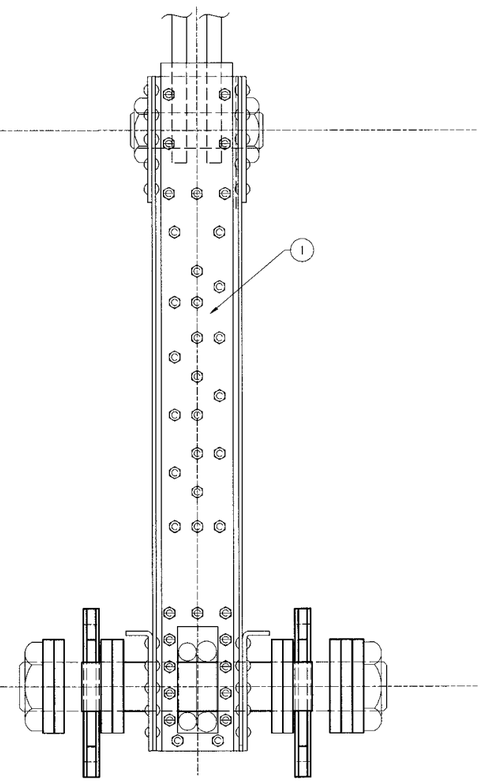

EAST TRUSS L3
(LOOKING SOUTH)

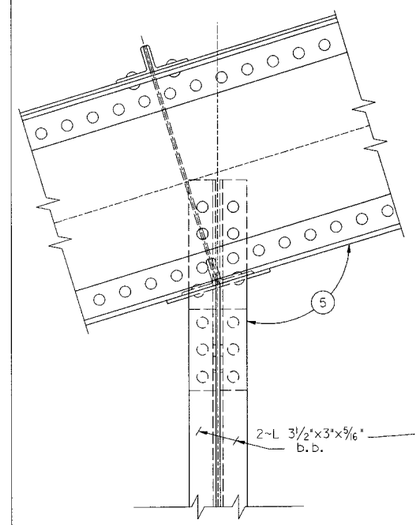

EAST TRUSS U3
(LOOKING DOWNSTREAM)

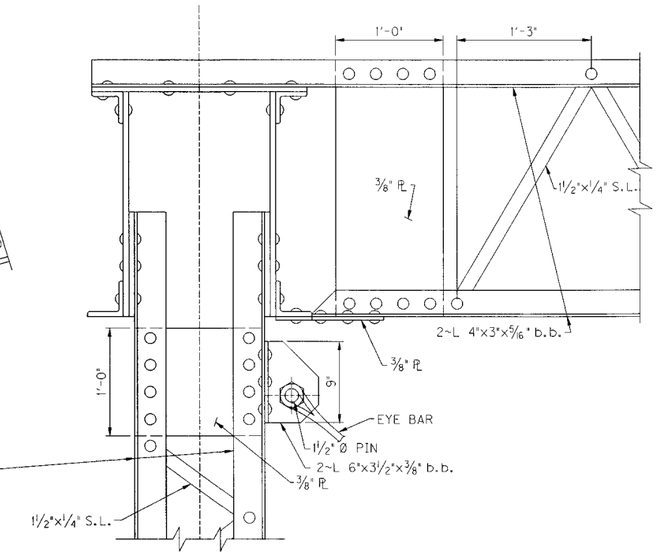

EAST TRUSS U3
(LOOKING SOUTH)

1. PLATE P1 PREVIOUSLY INSTALLED IN 1987 REHAB. SEE SHEETS S5-EX THRU S7-EX. BOLT PATTERNS BASED ON ORIGINAL RIVETS AND 1987 PLANS, BUT VARY.
2. ROD AND STIRRUP ASSEMBLY INSTALLED IN 1987 REHAB. SEE SHEETS S5-EX THRU S7-EX FOR DESIGNATION AND DIMENSIONS.
3. YOKE ASSEMBLY INSTALLED IN 1938 REHAB. SEE SHEET S3-EX.
4. LOWER CHORD EYEBARS SEE SHEET S3-EX.
5. TRUSS MEMBERS SEE SHEET S2-EX.

NOTE: THE ORIGINAL COMPONENTS OF THE CONNECTIONS ARE SYMETRIC ABOUT PANEL POINT 7 (CONNECTIONS AT PP3' ARE MIRROR IMAGES OF PP3), BUT THE RETROFITS WERE NOT CONDUCTED SYMETRICALLY. SEE SHEETS S3-EX AND S4-EX FOR DETAILS.

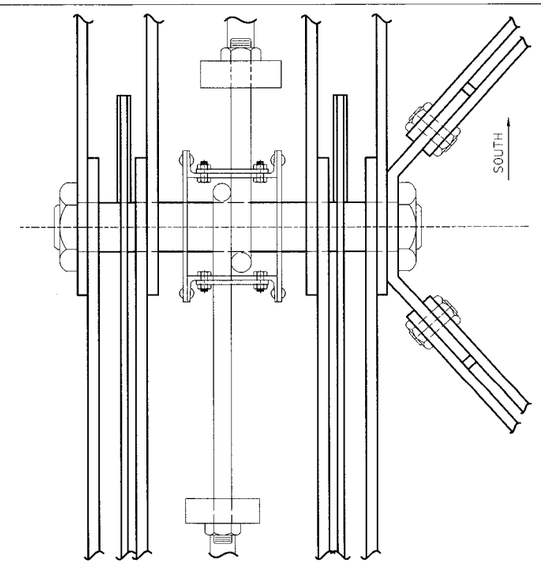

EAST TRUSS L3 – LOWER CHORD

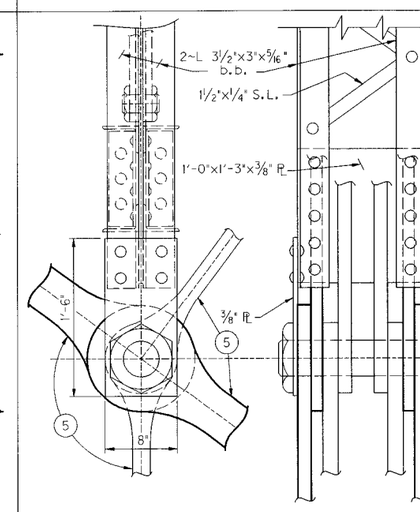

EAST TRUSS M3
(LOOKING DOWNSTREAM)

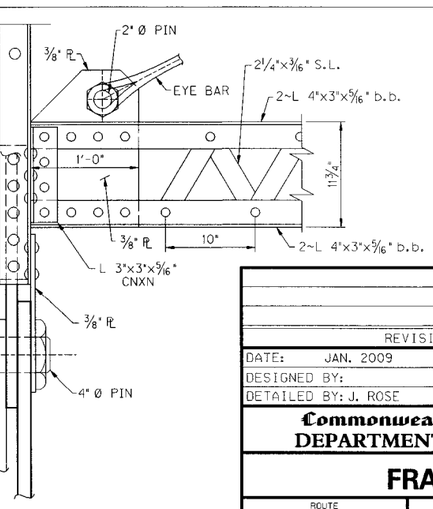

EAST TRUSS M3
(LOOKING SOUTH)

REVISION	DATE

DATE: JAN. 2009	CHECKED BY
DESIGNED BY:	
DETAILED BY: J. ROSE	D.E RUST

Commonwealth of Kentucky
DEPARTMENT OF HIGHWAYS

COUNTY: **FRANKLIN**

ROUTE: **ST. CLAIR STREET** | CROSSING: **KENTUCKY RIVER**

EAST TRUSS L3 CONNECTIONS

ITEM NUMBER

PREPARED BY: *PALMER ENGINEERING CO.*

SHEET NO. E-S11
DRAWING NO. 26522

FILE NAME: ...\dgn\ASBUILT_S11.dgn
DATE: 3/23/2009 7:32:00 AM
USERNAME:
SHEET LOCATION:
E-SHEET NAME:

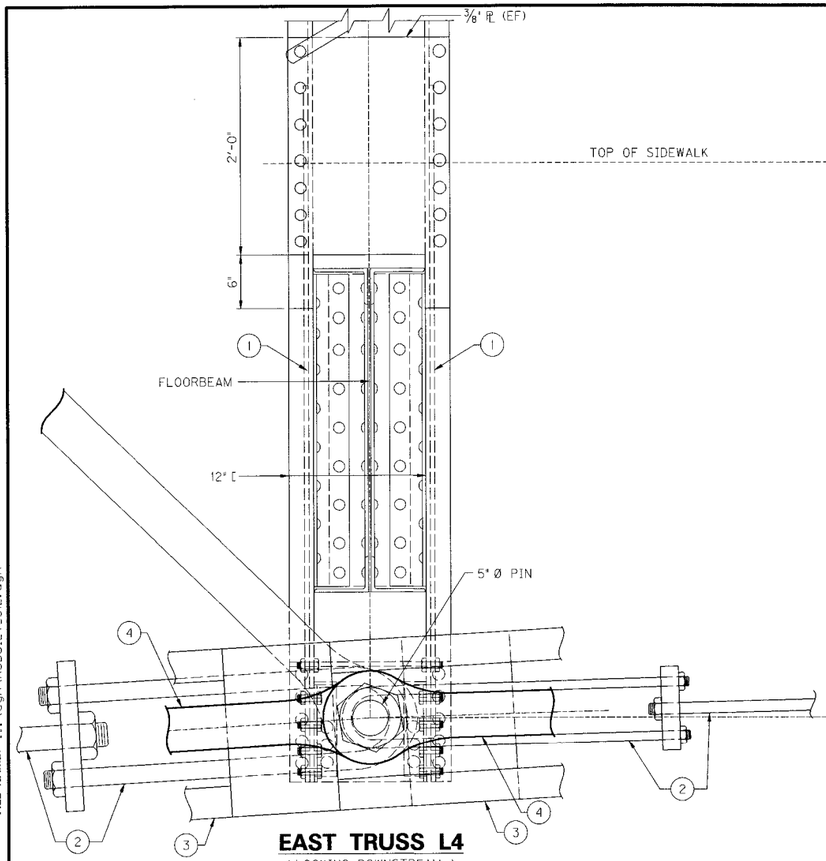

EAST TRUSS L4
(LOOKING DOWNSTREAM)

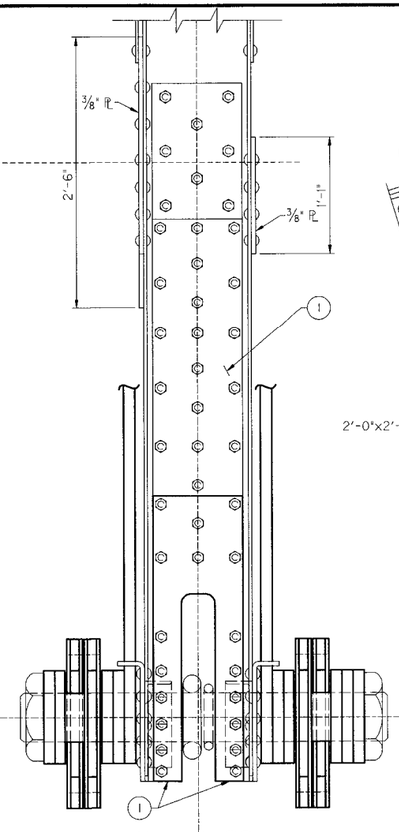

EAST TRUSS L4
(LOOKING SOUTH)

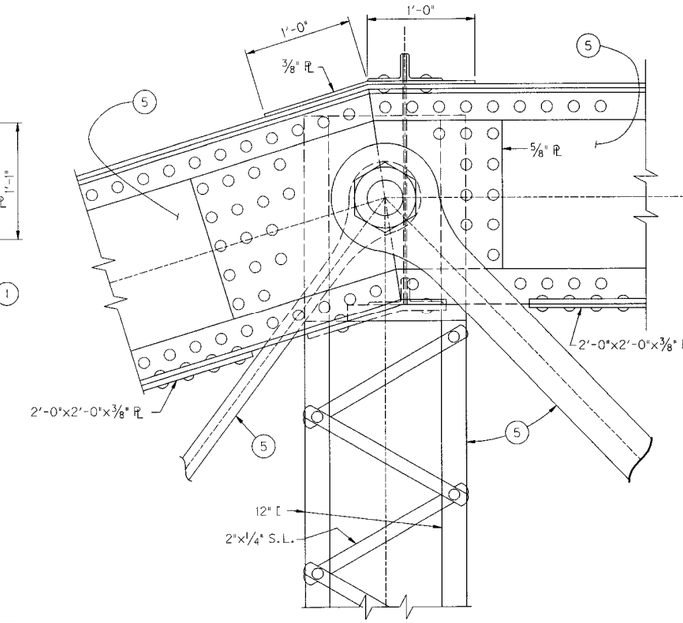

EAST TRUSS U4
(LOOKING DOWNSTREAM)

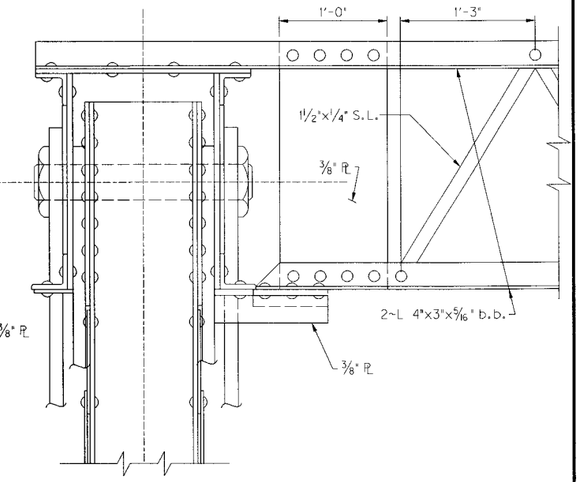

EAST TRUSS U4
(LOOKING SOUTH)

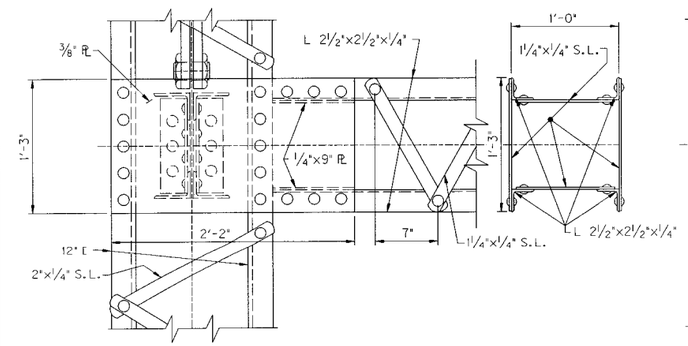

EAST TRUSS M4
(LOOKING DOWNSTREAM)

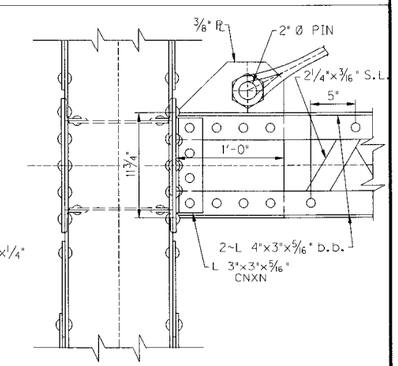

EAST TRUSS M4
(LOOKING SOUTH)

1. PLATES P2 & P3 PREVIOUSLY INSTALLED IN 1987 REHAB. SEE SHEETS S5-EX THRU S7-EX. BOLT PATTERNS BASED ON ORIGINAL RIVETS AND 1987 PLANS, BUT VARY.
2. ROD AND STIRRUP ASSEMBLY INSTALLED IN 1987 REHAB. SEE SHEETS S5-EX THRU S7-EX FOR DESIGNATION AND DIMENSIONS.
3. YOKE ASSEMBLY INSTALLED IN 1938 REHAB. SEE SHEET S3-EX.
4. LOWER CHORD EYEBARS SEE SHEET S3-EX.
5. TRUSS MEMBERS SEE SHEET S2-EX.

NOTE: THE ORIGINAL COMPONENTS OF THE CONNECTIONS ARE SYMETRIC ABOUT PANEL POINT 7 (CONNECTIONS AT PP4' ARE MIRROR IMAGES OF PP4), BUT THE RETROFITS WERE NOT CONDUCTED SYMETRICALLY. SEE SHEETS S3-EX AND S4-EX FOR DETAILS.

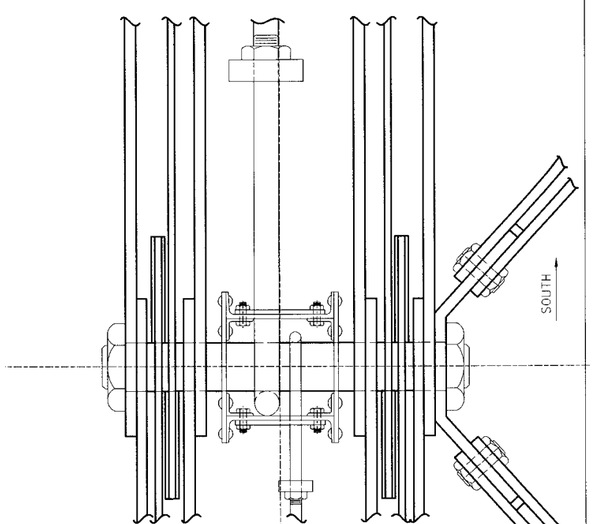

EAST TRUSS L4 - LOWER CHORD

REVISION	DATE

DATE: JAN. 2009	CHECKED BY
DESIGNED BY:	
DETAILED BY: J. ROSE	D.E. RUST

Commonwealth of Kentucky
DEPARTMENT OF HIGHWAYS

COUNTY: **FRANKLIN**

ROUTE: **ST. CLAIR STREET** | CROSSING: **KENTUCKY RIVER**

EAST TRUSS L4 CONNECTIONS

ITEM NUMBER

PREPARED BY: *PALMER ENGINEERING CO.*

SHEET NO. E-S12

DRAWING NO. 26522

SHEET LOCATION:

FILE NAME: ...\dgn\ASBUILT_S12.dgn

USERNAME:

DATE: 3/23/2009 7:32:00 AM

E-SHEET NAME:

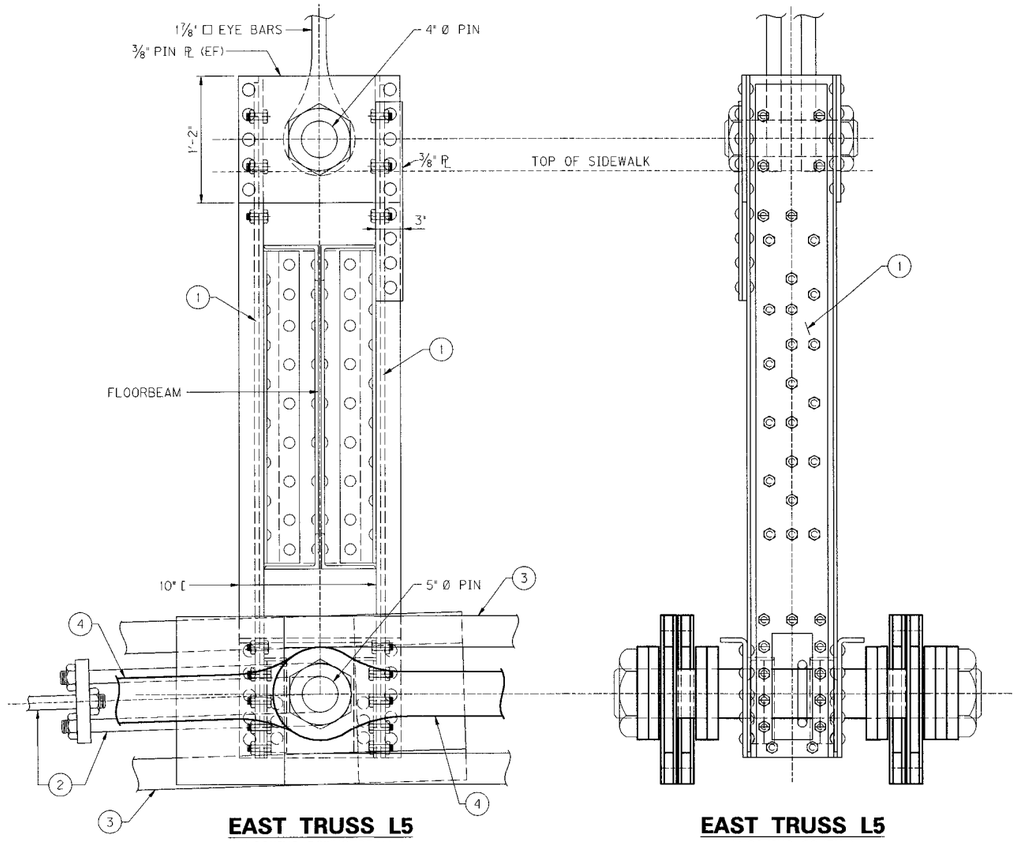

EAST TRUSS L5
(LOOKING DOWNSTREAM)

EAST TRUSS L5
(LOOKING SOUTH)

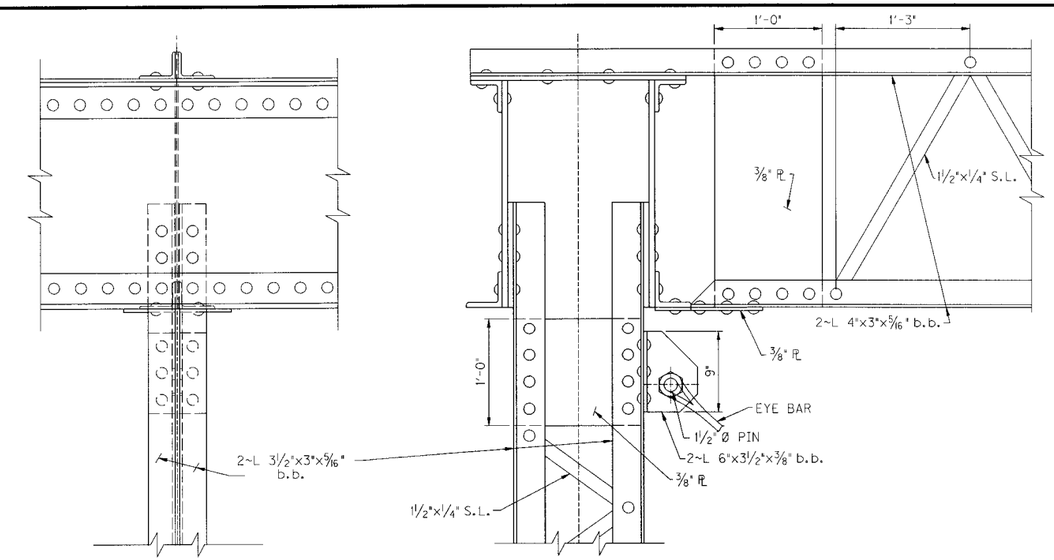

EAST TRUSS U5
(LOOKING DOWNSTREAM)

EAST TRUSS U5
(LOOKING SOUTH)

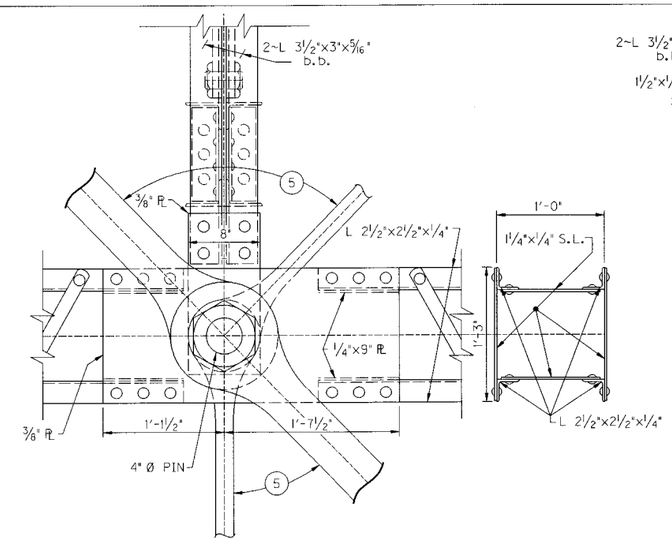

EAST TRUSS M5
(LOOKING DOWNSTREAM)

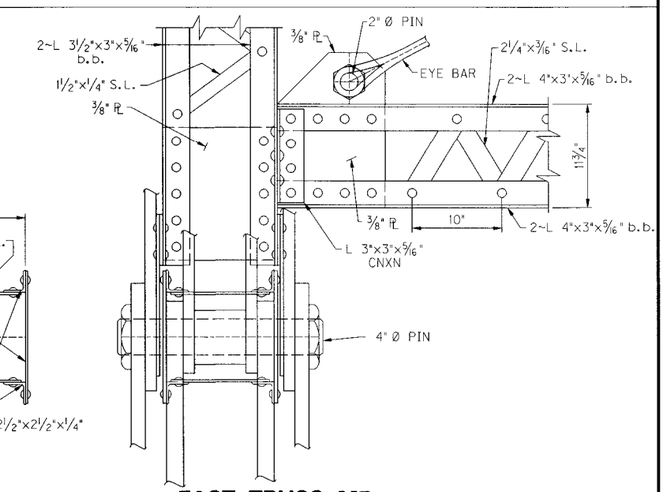

EAST TRUSS M5
(LOOKING SOUTH)

1. PLATE P1 PREVIOUSLY INSTALLED IN 1987 REHAB. SEE SHEETS S5-EX THRU S7-EX. BOLT PATTERNS BASED ON ORIGINAL RIVETS AND 1987 PLANS, BUT VARY.
2. ROD AND STIRRUP ASSEMBLY INSTALLED IN 1987 REHAB. SEE SHEETS S5-EX THRU S7-EX FOR DESIGNATION AND DIMENSIONS.
3. YOKE ASSEMBLY INSTALLED IN 1938 REHAB. SEE SHEET S3-EX.
4. LOWER CHORD EYEBARS SEE SHEET S3-EX.
5. TRUSS MEMBERS SEE SHEET S2-EX.

NOTE: THE ORIGINAL COMPONENTS OF THE CONNECTIONS ARE SYMETRIC ABOUT PANEL POINT 7 (CONNECTIONS AT PP5' ARE MIRROR IMAGES OF PP5), BUT THE RETROFITS WERE NOT CONDUCTED SYMETRICALLY. SEE SHEETS S3-EX AND S4-EX FOR DETAILS.

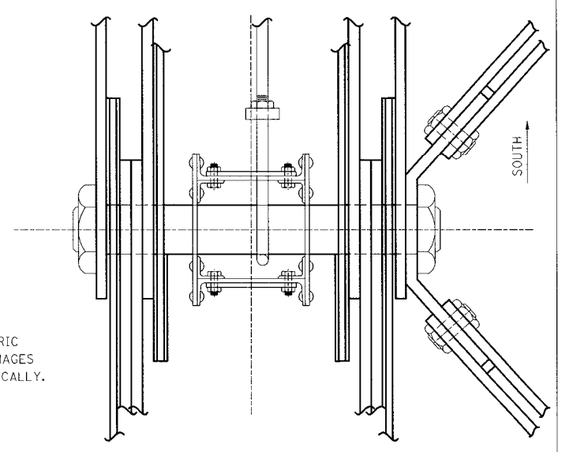

EAST TRUSS L5 - LOWER CHORD

REVISION	DATE

DATE: JAN. 2009	CHECKED BY
DESIGNED BY:	
DETAILED BY: J. ROSE	D.E. RUST

Commonwealth of Kentucky
DEPARTMENT OF HIGHWAYS

COUNTY: **FRANKLIN**

ROUTE: **ST. CLAIR STREET** | CROSSING: **KENTUCKY RIVER**

EAST TRUSS L5 CONNECTIONS

ITEM NUMBER

PREPARED BY: *PALMER ENGINEERING CO.*

SHEET NO. E-S13

DRAWING NO. 26522

SHEET LOCATION:

FILE NAME: ...\dgn\ASBUILT_S13.dgn

USERNAME:

7:32:01 AM

DATE: 3/23/2009

E-SHEET NAME:

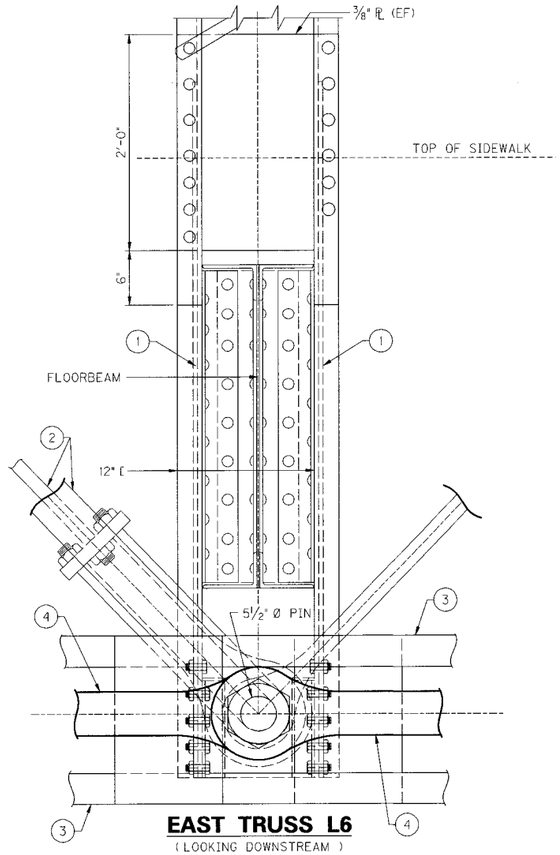

EAST TRUSS L6
(LOOKING DOWNSTREAM)

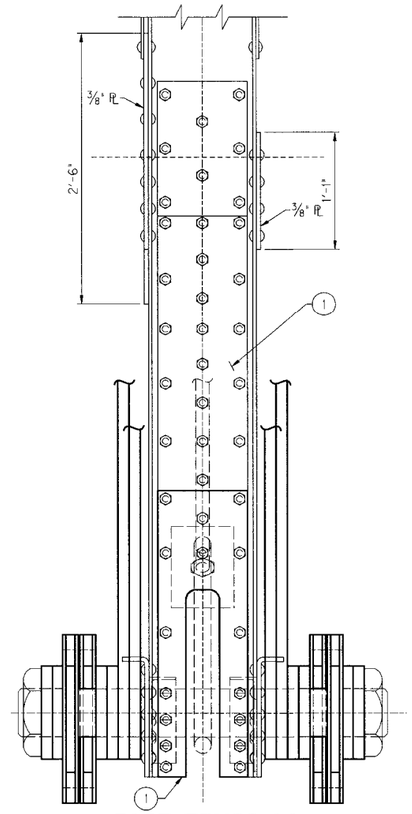

EAST TRUSS L6
(LOOKING SOUTH)

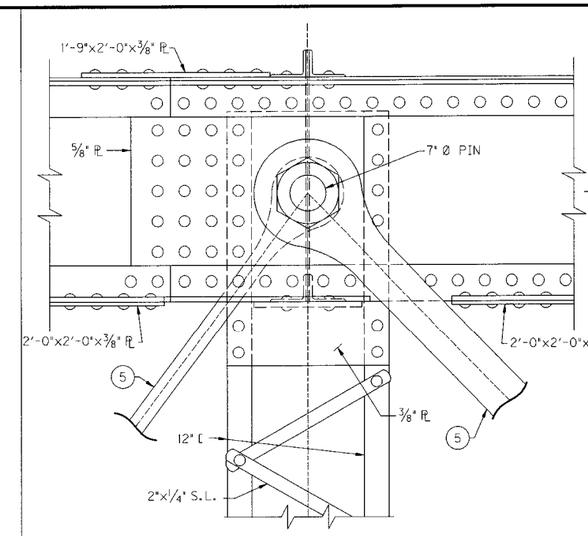

EAST TRUSS U6
(LOOKING DOWNSTREAM)

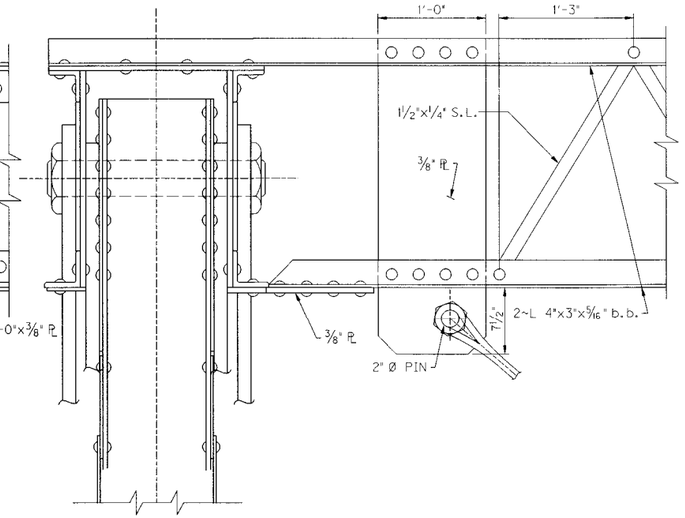

EAST TRUSS U6
(LOOKING SOUTH)

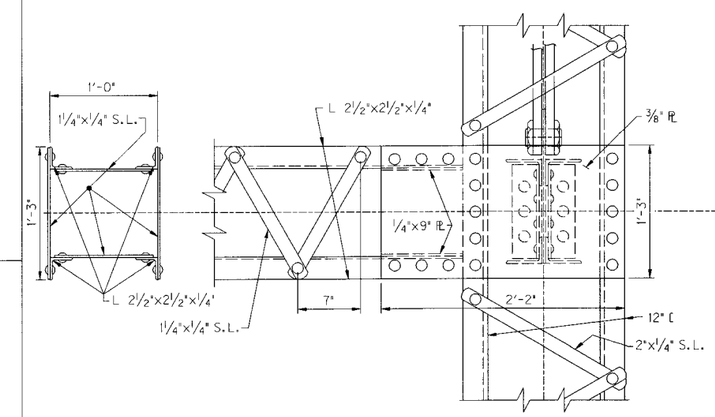

EAST TRUSS M6
(LOOKING DOWNSTREAM)

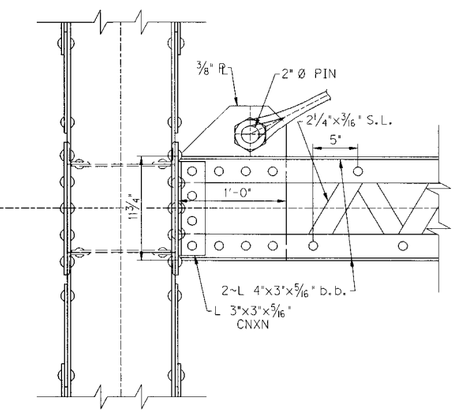

EAST TRUSS M6
(LOOKING SOUTH)

(1) PLATES P4 & P5 (NF) AND P2 & P3 (SF) PREVIOUSLY INSTALLED IN 1987 REHAB. SEE SHEETS S5-EX THRU S7-EX. BOLT PATTERNS BASED ON ORIGINAL RIVETS AND 1987 PLANS, BUT VARY.

(2) ROD AND STIRRUP ASSEMBLY INSTALLED IN 1987 REHAB. SEE SHEETS S5-EX THRU S7-EX FOR DESIGNATION AND DIMENSIONS.

(3) YOKE ASSEMBLY INSTALLED IN 1938 REHAB. SEE SHEET S3-EX.

(4) LOWER CHORD EYEBARS SEE SHEET S3-EX.

(5) TRUSS MEMBERS SEE SHEET S2-EX.

NOTE: THE ORIGINAL COMPONENTS OF THE CONNECTIONS ARE SYMETRIC ABOUT PANEL POINT 7 (CONNECTIONS AT PP6' ARE MIRROR IMAGES OF PP6), BUT THE RETROFITS WERE NOT CONDUCTED SYMETRICALLY. SEE SHEETS S3-EX AND S4-EX FOR DETAILS.

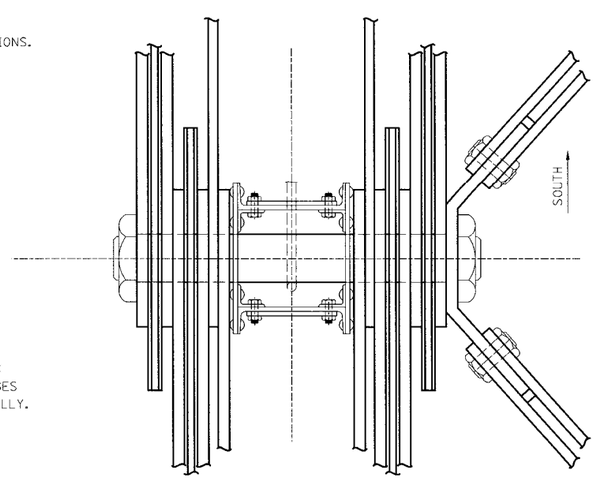

EAST TRUSS L6 – LOWER CHORD

REVISION	DATE

DATE: JAN. 2009	CHECKED BY
DESIGNED BY:	
DETAILED BY: J. ROSE	D.E. RUST

Commonwealth of Kentucky
DEPARTMENT OF HIGHWAYS

COUNTY: **FRANKLIN**

ROUTE: **ST. CLAIR STREET** | CROSSING: **KENTUCKY RIVER**

EAST TRUSS L6 CONNECTIONS

ITEM NUMBER

PREPARED BY: *PALMER ENGINEERING CO.*

SHEET NO. E-S14

DRAWING NO. 26522

SHEET LOCATION:

FILE NAME: ...\dgn\ASBUILT_S14.dgn

USERNAME:

DATE: 3/23/2009 7:32:01 AM

E-SHEET NAME:

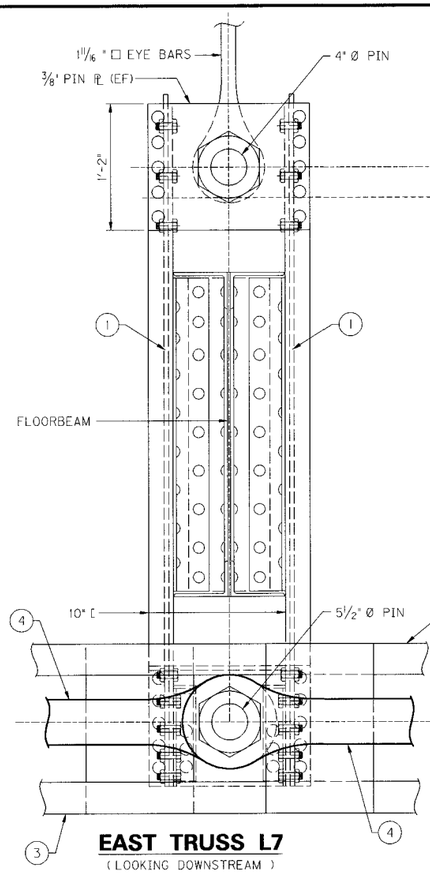

EAST TRUSS L7
(LOOKING DOWNSTREAM)

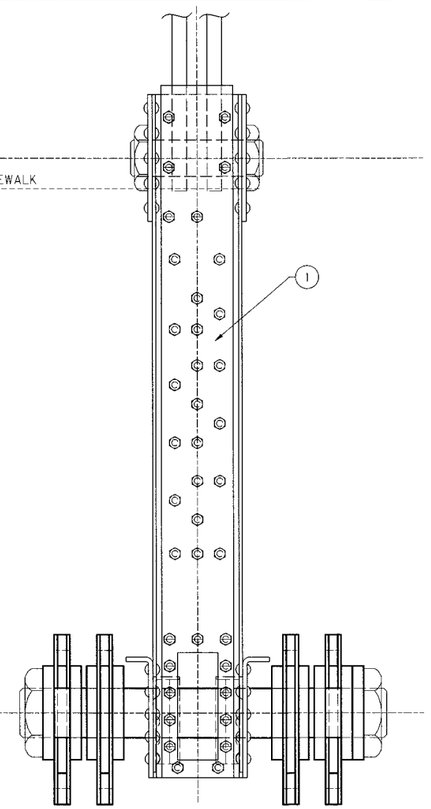

EAST TRUSS L7
(LOOKING SOUTH)

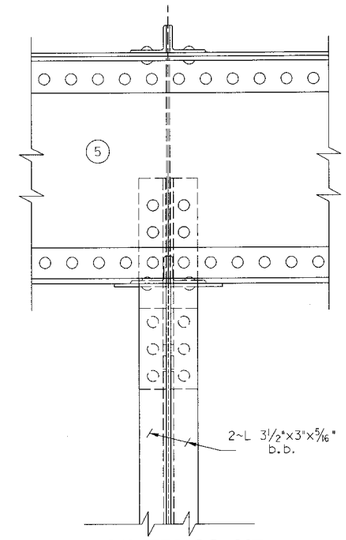

EAST TRUSS U7
(LOOKING DOWNSTREAM)

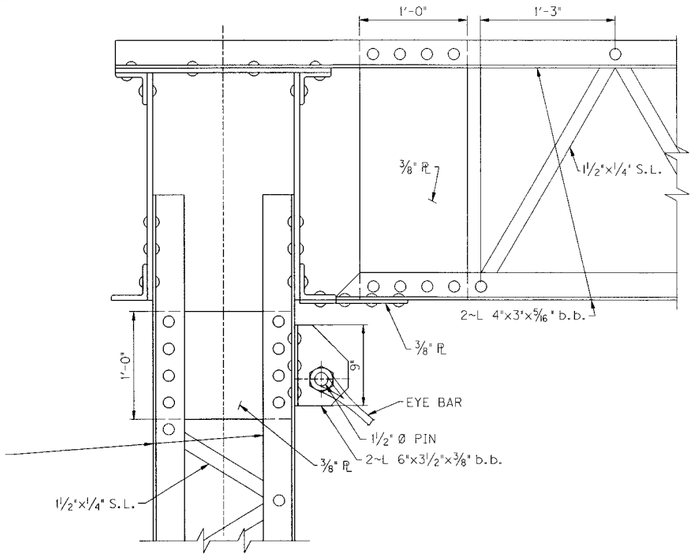

EAST TRUSS U7
(LOOKING SOUTH)

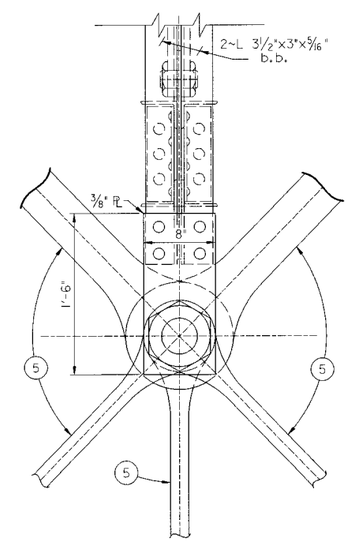

EAST TRUSS M7
(LOOKING DOWNSTREAM)

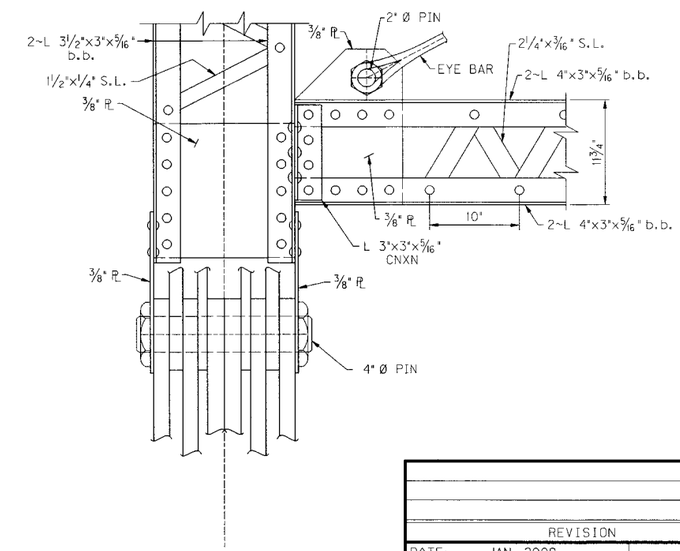

EAST TRUSS M7
(LOOKING SOUTH)

1. PLATE P1 PREVIOUSLY INSTALLED IN 1987 REHAB. SEE SHEETS S5-EX THRU S7-EX. BOLT PATTERNS BASED ON ORIGINAL RIVETS AND 1987 PLANS, BUT VARY.
2. ROD AND STIRRUP ASSEMBLY INSTALLED IN 1987 REHAB. SEE SHEETS S5-EX THRU S7-EX FOR DESIGNATION AND DIMENSIONS.
3. YOKE ASSEMBLY INSTALLED IN 1938 REHAB. SEE SHEET S3-EX.
4. LOWER CHORD EYEBARS SEE SHEET S3-EX.
5. TRUSS MEMBERS SEE SHEET S2-EX.

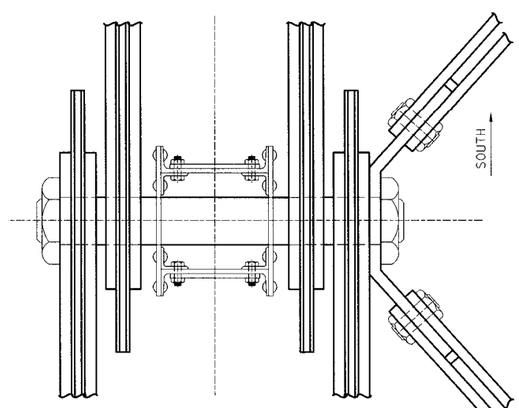

EAST TRUSS L7 - LOWER CHORD

REVISION	DATE

DATE: JAN. 2009	CHECKED BY
DESIGNED BY:	
DETAILED BY: J. ROSE	D.E. RUST

Commonwealth of Kentucky
DEPARTMENT OF HIGHWAYS

COUNTY: **FRANKLIN**

ROUTE: **ST. CLAIR STREET** | CROSSING: **KENTUCKY RIVER**

EAST TRUSS L7 CONNECTIONS

ITEM NUMBER

PREPARED BY: *PALMER ENGINEERING CO.*

SHEET NO. **E-S15**
DRAWING NO. **26522**

SHEET LOCATION:
FILE NAME: ...\dgn\ASBUILT_S15.dgn
USERNAME:
DATE: 3/23/2009 7:32:02 AM
E-SHEET NAME:

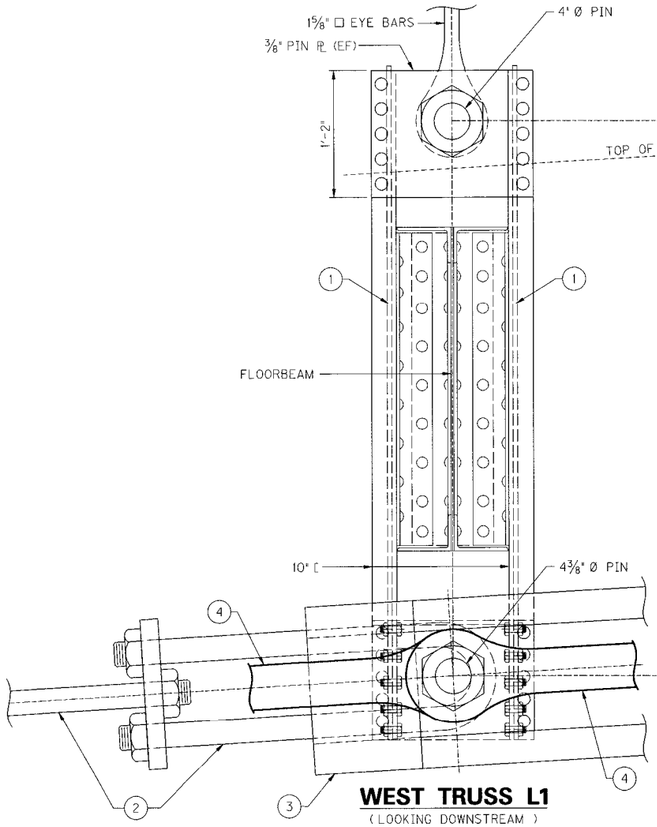

WEST TRUSS L1
(LOOKING DOWNSTREAM)

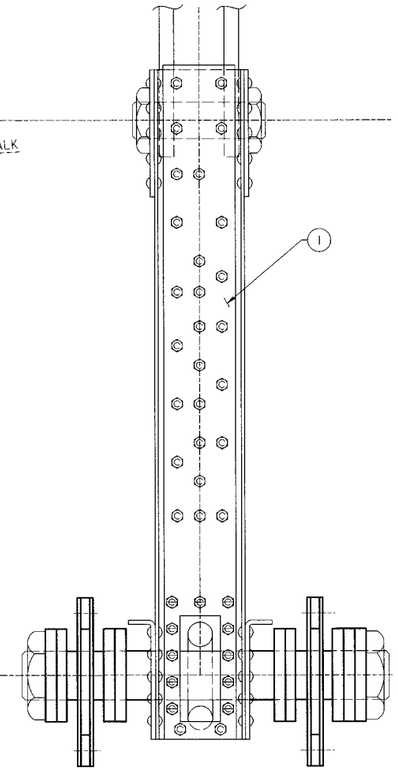

WEST TRUSS L1
(LOOKING NORTH)

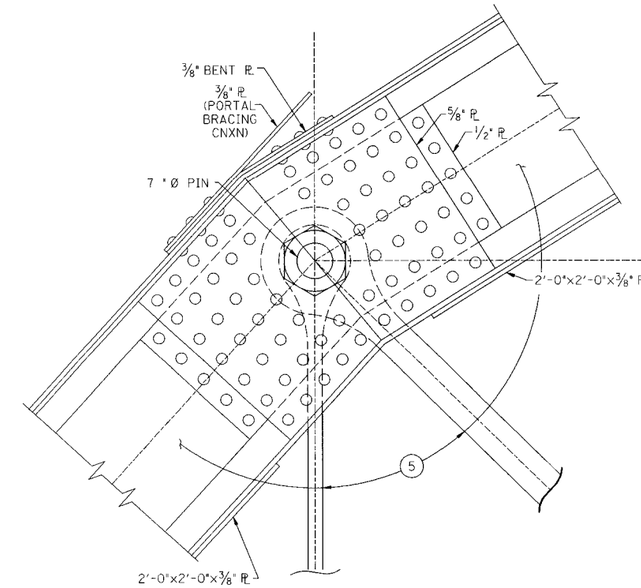

WEST TRUSS U1
(LOOKING DOWNSTREAM)

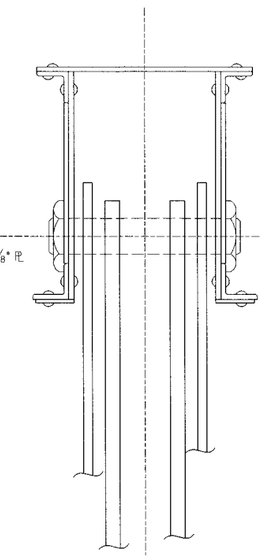

WEST TRUSS U1
(LOOKING NORTH)

1. PLATE P1 PREVIOUSLY INSTALLED IN 1987 REHAB. SEE SHEETS S5-EX THRU S7-EX. BOLT PATTERNS BASED ON ORIGINAL RIVETS AND 1987 PLANS, BUT VARY.
2. ROD AND STIRRUP ASSEMBLY INSTALLED IN 1987 REHAB. SEE SHEETS S5-EX THRU S7-EX FOR DESIGNATION AND DIMENSIONS.
3. YOKE ASSEMBLY INSTALLED IN 1938 REHAB. SEE SHEET S3-EX.
4. LOWER CHORD EYEBARS SEE SHEET S3-EX.
5. TRUSS MEMBERS SEE SHEET S2-EX.

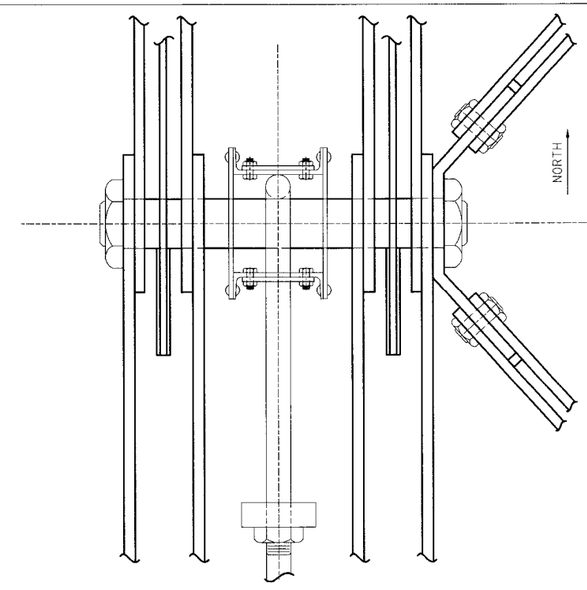

WEST TRUSS L1 – LOWER CHORD

REVISION	DATE

DATE: JAN. 2009	CHECKED BY
DESIGNED BY:	
DETAILED BY: J. ROSE	D.E. RUST

Commonwealth of Kentucky
DEPARTMENT OF HIGHWAYS

COUNTY: **FRANKLIN**

ROUTE: **ST. CLAIR STREET** | CROSSING: **KENTUCKY RIVER**

WEST TRUSS L1 CONNECTIONS

ITEM NUMBER

PREPARED BY: *PALMER ENGINEERING CO.*

SHEET NO. E-S16

DRAWING NO. 26522

SHEET LOCATION:

FILE NAME: ...\dgn\ASBUILT_S16.dgn

USERNAME:

DATE: 3/23/2009 7:32:02 AM

E-SHEET NAME:

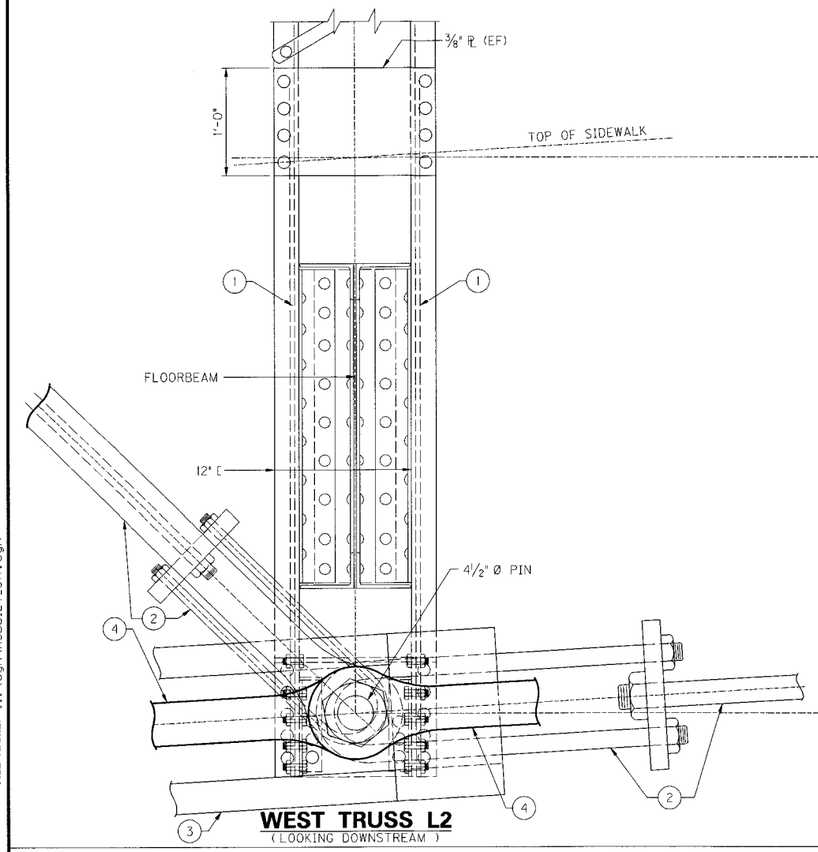

WEST TRUSS L2
(LOOKING DOWNSTREAM)

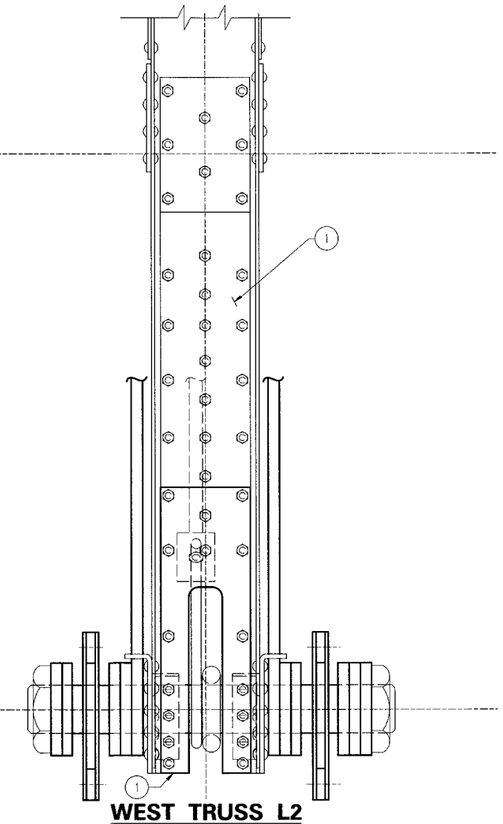

WEST TRUSS L2
(LOOKING NORTH)

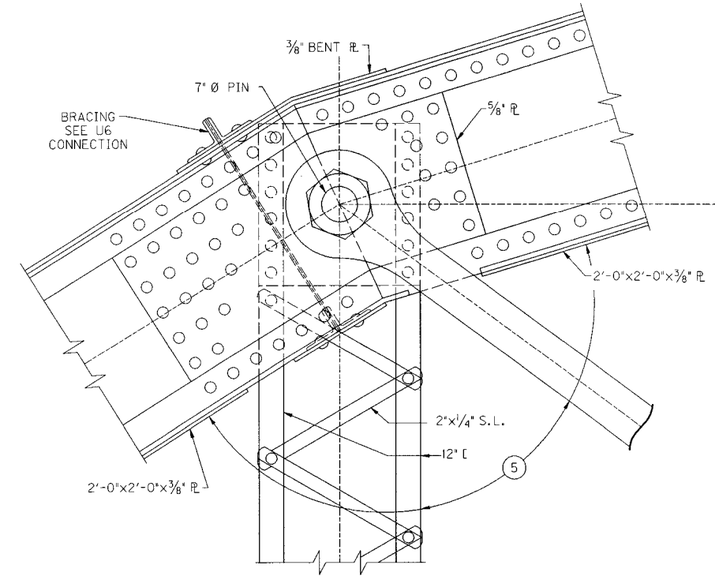

WEST TRUSS U2
(LOOKING DOWNSTREAM)

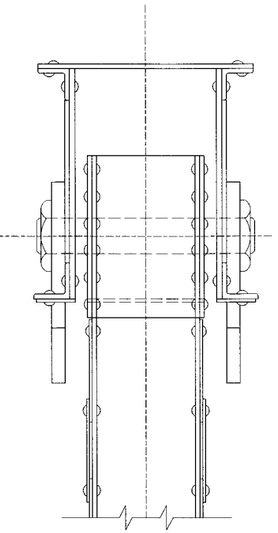

WEST TRUSS U2
(LOOKING NORTH)

1. PLATES P2 AND P3 PREVIOUSLY INSTALLED IN 1987 REHAB. SEE SHEETS S5-EX THRU S7-EX. BOLT PATTERNS BASED ON ORIGINAL RIVETS AND 1987 PLANS, BUT VARY.
2. ROD AND STIRRUP ASSEMBLY INSTALLED IN 1987 REHAB. SEE SHEETS S5-EX THRU S7-EX FOR DESIGNATION AND DIMENSIONS.
3. YOKE ASSEMBLY INSTALLED IN 1938 REHAB. SEE SHEET S3-EX.
4. LOWER CHORD EYEBARS SEE SHEET S3-EX.
5. TRUSS MEMBERS SEE SHEET S2-EX.

NOTE: THE ORIGINAL COMPONENTS OF THE CONNECTIONS ARE SYMETRIC ABOUT PANEL POINT 7 (CONNECTIONS AT PP2' ARE MIRROR IMAGES OF PP2), BUT THE RETROFITS WERE NOT CONDUCTED SYMETRICALLY. SEE SHEETS S3-EX AND S4-EX FOR DETAILS.

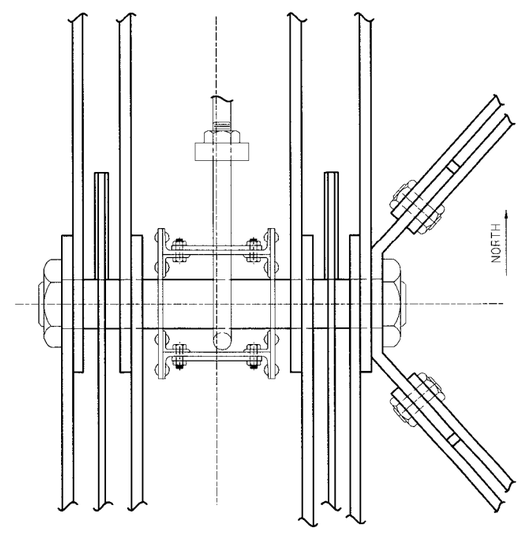

WEST TRUSS L2 – LOWER CHORD

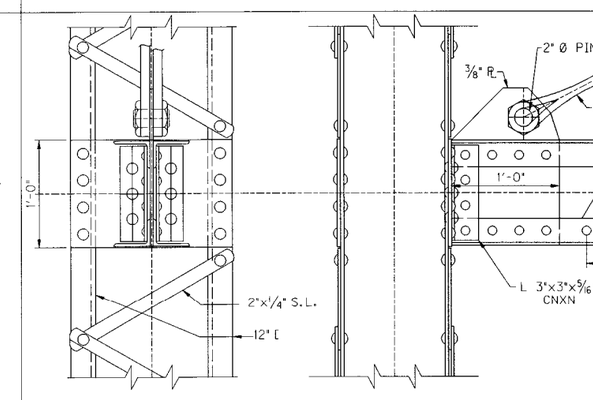

WEST TRUSS M2
(LOOKING DOWNSTREAM)

WEST TRUSS M2
(LOOKING NORTH)

REVISION	DATE

DATE: JAN. 2009	CHECKED BY
DESIGNED BY:	
DETAILED BY: J. ROSE	D.E. RUST

Commonwealth of Kentucky
DEPARTMENT OF HIGHWAYS

COUNTY: **FRANKLIN**

ROUTE: **ST. CLAIR STREET** | CROSSING: **KENTUCKY RIVER**

WEST TRUSS L2 CONNECTIONS

ITEM NUMBER

PREPARED BY: *PALMER ENGINEERING CO.*

SHEET NO. E-S17

DRAWING NO. 26522

SHEET LOCATION:
FILE NAME: ...\dgn\ASBUILT_S17.dgn
USERNAME:
DATE: 3/23/2009 7:32:03 AM
E-SHEET NAME:

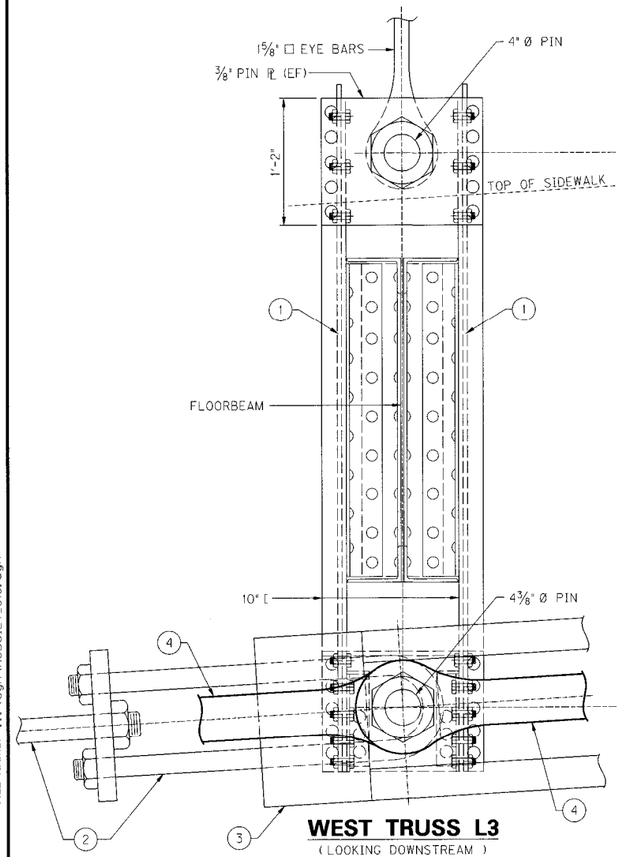

WEST TRUSS L3
(LOOKING DOWNSTREAM)

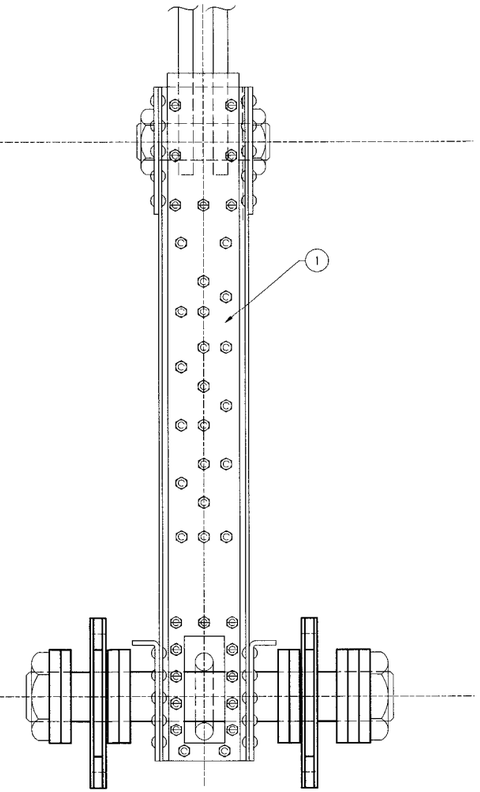

WEST TRUSS L3
(LOOKING NORTH)

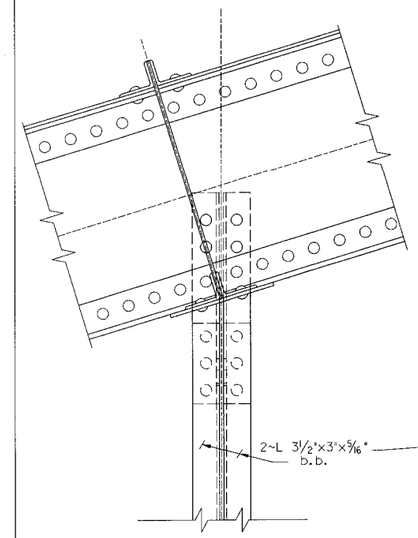

WEST TRUSS U3
(LOOKING DOWNSTREAM)

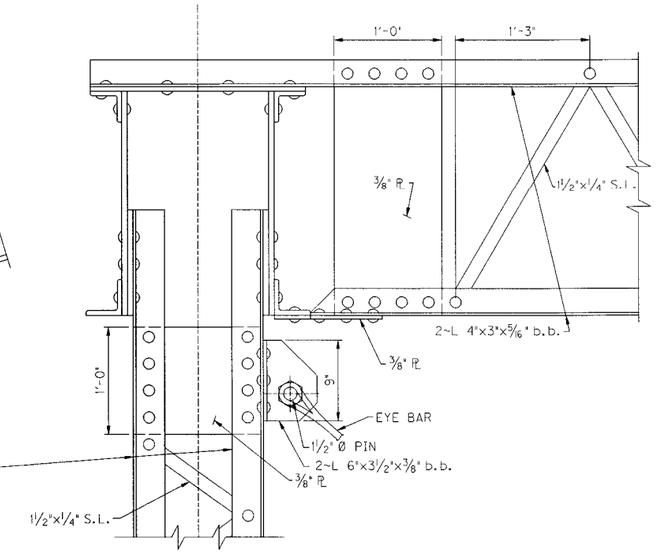

WEST TRUSS U3
(LOOKING NORTH)

1. PLATE P1 PREVIOUSLY INSTALLED IN 1987 REHAB. SEE SHEETS S5-EX THRU S7-EX. BOLT PATTERNS BASED ON ORIGINAL RIVETS AND 1987 PLANS, BUT VARY.
2. ROD AND STIRRUP ASSEMBLY INSTALLED IN 1987 REHAB. SEE SHEETS S5-EX THRU S7-EX FOR DESIGNATION AND DIMENSIONS.
3. YOKE ASSEMBLY INSTALLED IN 1938 REHAB. SEE SHEET S3-EX.
4. LOWER CHORD EYEBARS SEE SHEET S3-EX.
5. TRUSS MEMBERS SEE SHEET S2-EX.

NOTE: THE ORIGINAL COMPONENTS OF THE CONNECTIONS ARE SYMETRIC ABOUT PANEL POINT 7 (CONNECTIONS AT PP3' ARE MIRROR IMAGES OF PP3), BUT THE RETROFITS WERE NOT CONDUCTED SYMETRICALLY. SEE SHEETS S3-EX AND S4-EX FOR DETAILS.

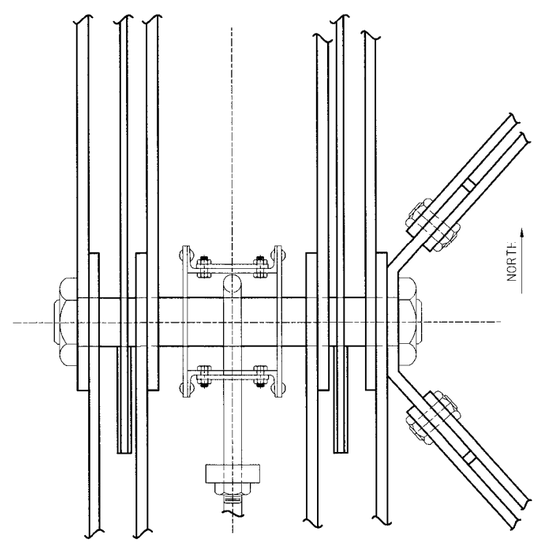

WEST TRUSS L3 – LOWER CHORD

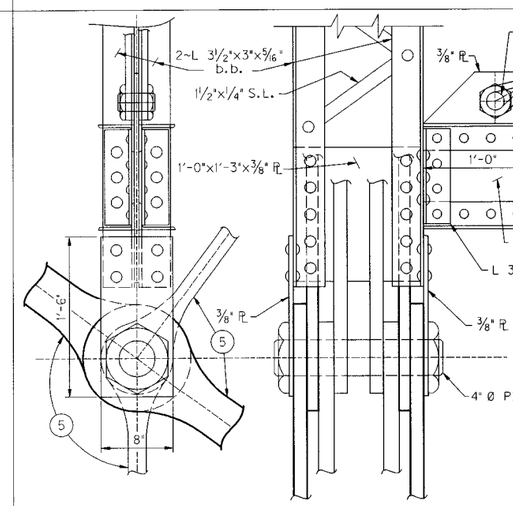

WEST TRUSS M3
(LOOKING DOWNSTREAM)

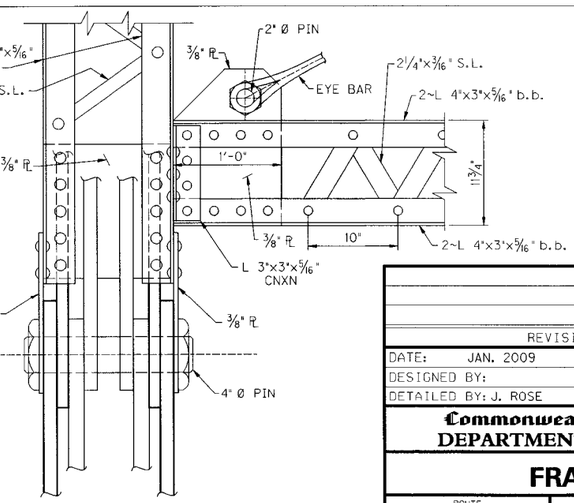

WEST TRUSS M3
(LOOKING NORTH)

REVISION	DATE

DATE: JAN. 2009	CHECKED BY
DESIGNED BY:	
DETAILED BY: J. ROSE	D.E. RUST

Commonwealth of Kentucky
DEPARTMENT OF HIGHWAYS

COUNTY: **FRANKLIN**

ROUTE: **ST. CLAIR STREET** | CROSSING: **KENTUCKY RIVER**

WEST TRUSS L3 CONNECTIONS

ITEM NUMBER

PREPARED BY: *PALMER ENGINEERING CO.*

SHEET NO. E-S18
DRAWING NO. 26522

SHEET LOCATION:
FILE NAME: ...\dgn\ASBUILT_S18.dgn
USERNAME:
DATE: 3/23/2009 7:32:03 AM
E-SHEET NAME:

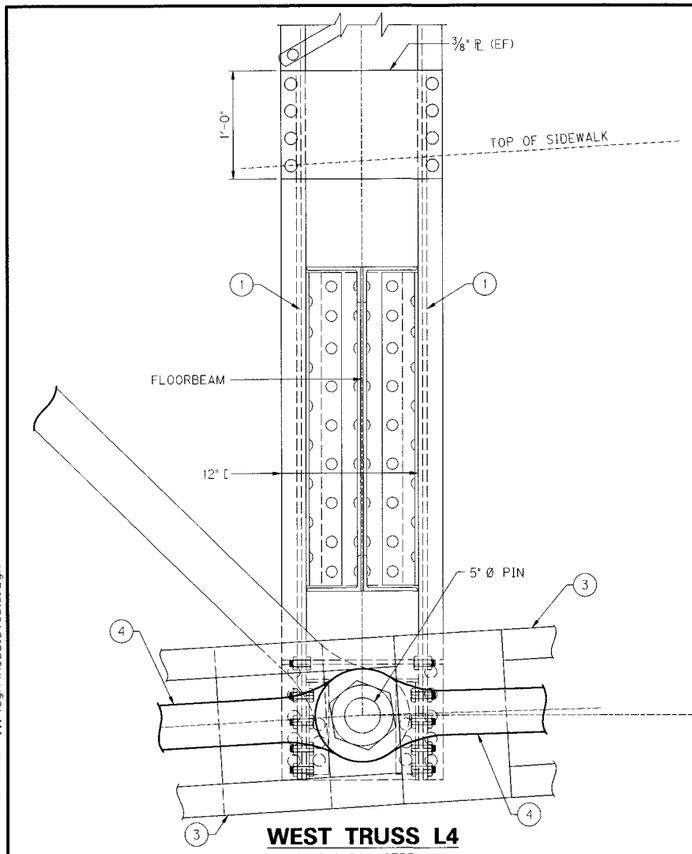

WEST TRUSS L4
(LOOKING DOWNSTREAM)

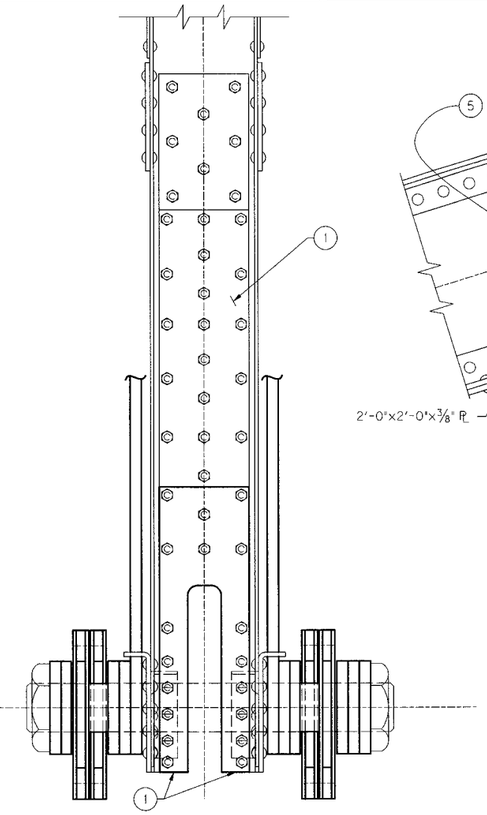

WEST TRUSS L4
(LOOKING NORTH)

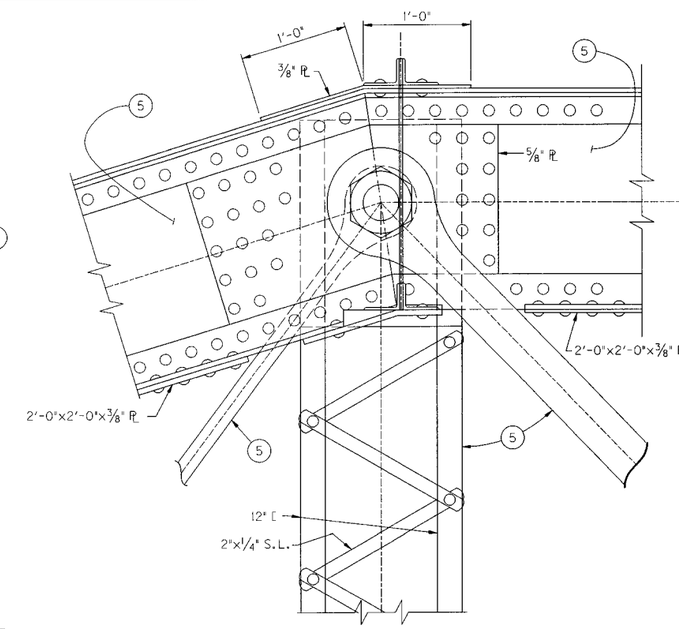

WEST TRUSS U4
(LOOKING DOWNSTREAM)

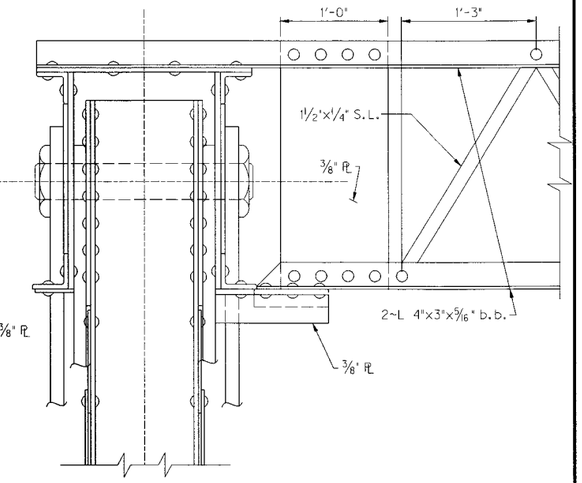

WEST TRUSS U4
(LOOKING NORTH)

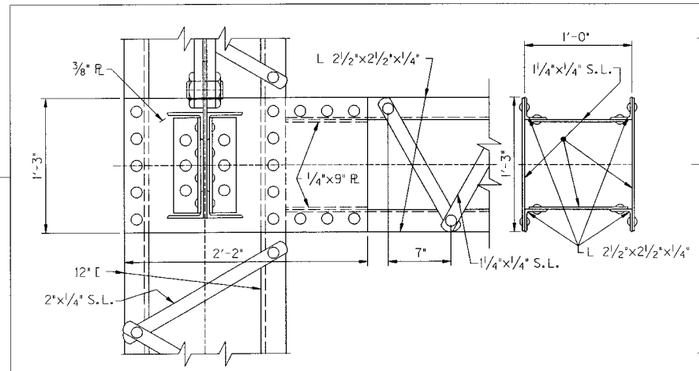

WEST TRUSS M4
(LOOKING DOWNSTREAM)

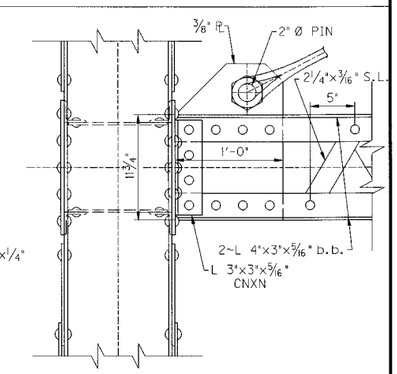

WEST TRUSS M4
(LOOKING NORTH)

1. PLATES P2 & P3 PREVIOUSLY INSTALLED IN 1987 REHAB. SEE SHEETS S5-EX THRU S7-EX. BOLT PATTERNS BASED ON ORIGINAL RIVETS AND 1987 PLANS, BUT VARY.
2. ROD AND STIRRUP ASSEMBLY INSTALLED IN 1987 REHAB. SEE SHEETS S5-EX THRU S7-EX FOR DESIGNATION AND DIMENSIONS.
3. YOKE ASSEMBLY INSTALLED IN 1938 REHAB. SEE SHEET S3-EX.
4. LOWER CHORD EYEBARS SEE SHEET S3-EX.
5. TRUSS MEMBERS SEE SHEET S2-EX.

NOTE: THE ORIGINAL COMPONENTS OF THE CONNECTIONS ARE SYMETRIC ABOUT PANEL POINT 7 (CONNECTIONS AT PP4' ARE MIRROR IMAGES OF PP4), BUT THE RETROFITS WERE NOT CONDUCTED SYMETRICALLY. SEE SHEETS S3-EX AND S4-EX FOR DETAILS.

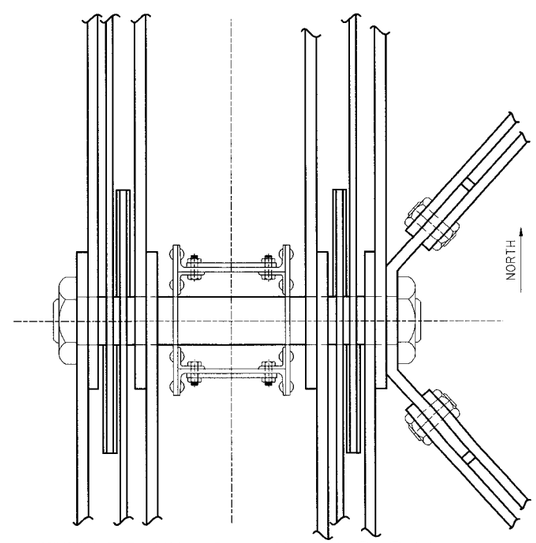

WEST TRUSS L4 – LOWER CHORD

REVISION	DATE

DATE: JAN. 2009	CHECKED BY
DESIGNED BY:	
DETAILED BY: J. ROSE	D.E. RUST

Commonwealth of Kentucky
DEPARTMENT OF HIGHWAYS

COUNTY: **FRANKLIN**

ROUTE: **ST. CLAIR STREET** | CROSSING: **KENTUCKY RIVER**

WEST TRUSS L4 CONNECTIONS

ITEM NUMBER

PREPARED BY: *PALMER ENGINEERING CO.*

SHEET NO. E-S19

DRAWING NO. 26522

SHEET LOCATION:
FILE NAME: ...\dgn\ASBUILT_S19.dgn
USERNAME:
DATE: 3/23/2009 7:32:04 AM
E-SHEET NAME:

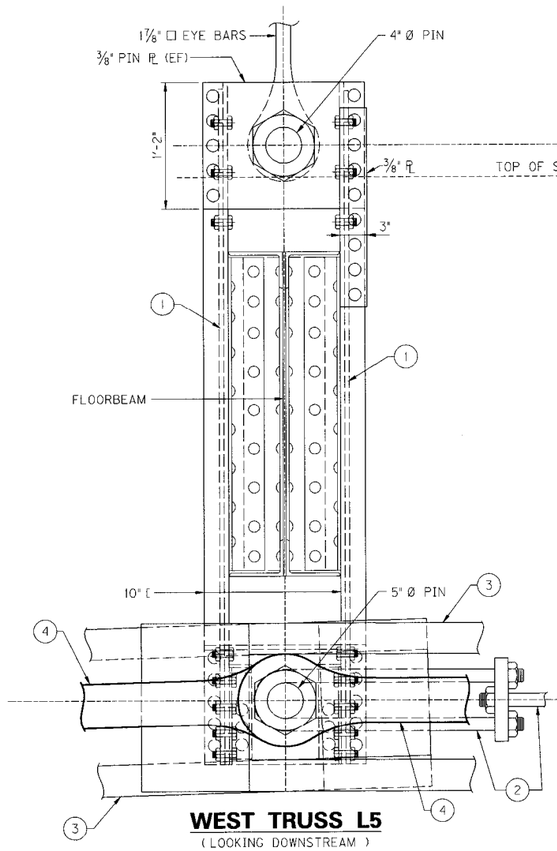

WEST TRUSS L5
(LOOKING DOWNSTREAM)

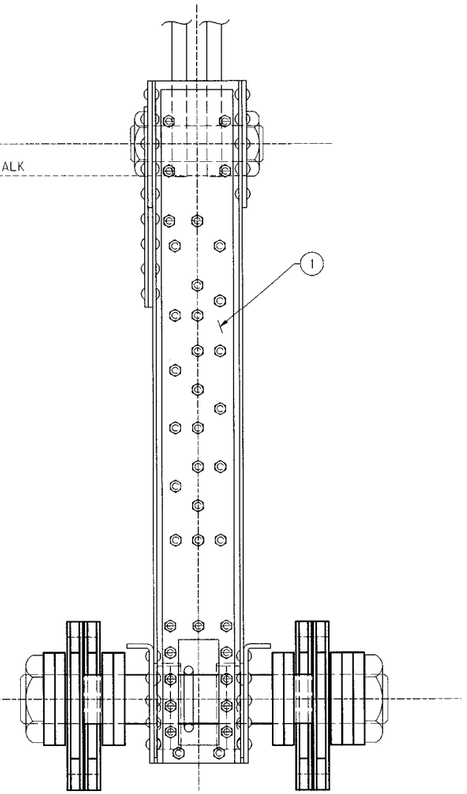

WEST TRUSS L5
(LOOKING NORTH)

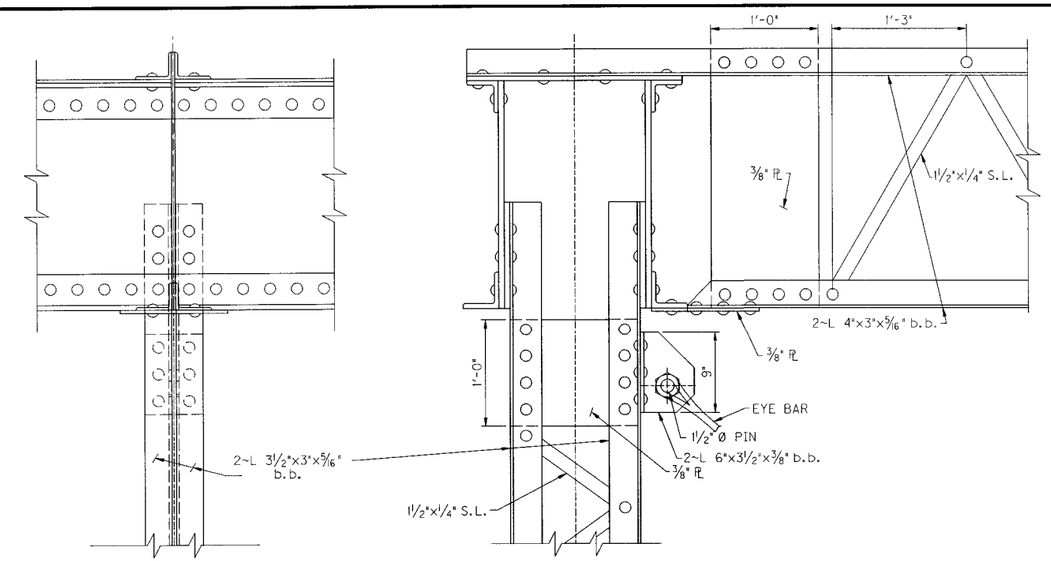

WEST TRUSS U5
(LOOKING DOWNSTREAM)

WEST TRUSS U5
(LOOKING NORTH)

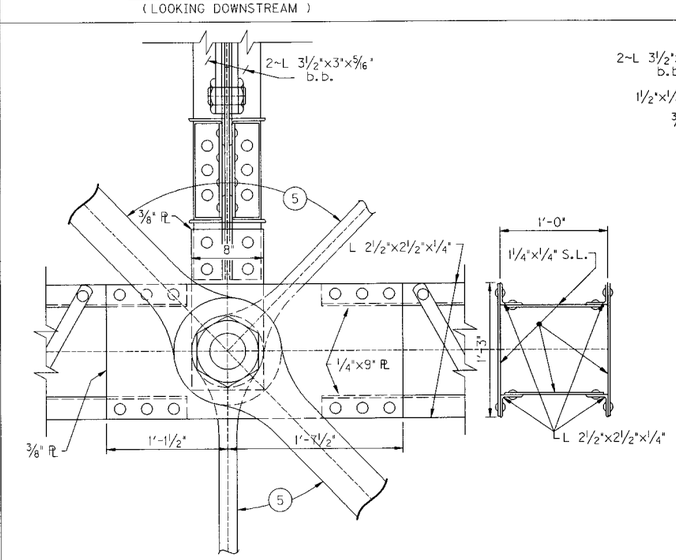

WEST TRUSS M5
(LOOKING DOWNSTREAM)

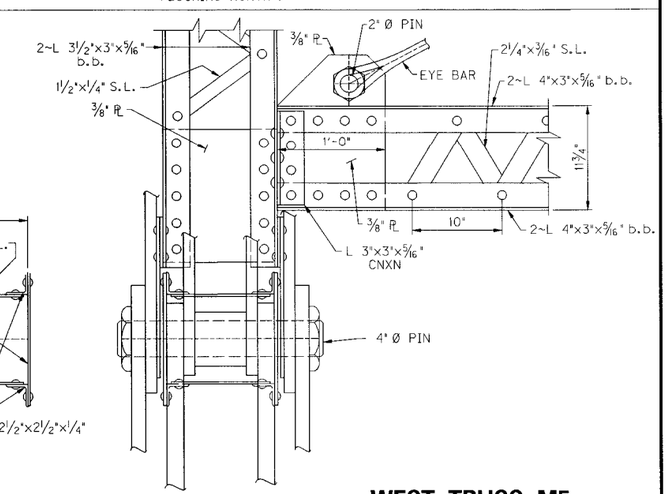

WEST TRUSS M5
(LOOKING NORTH)

1. PLATE P1 PREVIOUSLY INSTALLED IN 1987 REHAB. SEE SHEETS S5-EX THRU S7-EX. BOLT PATTERNS BASED ON ORIGINAL RIVETS AND 1987 PLANS, BUT VARY.
2. ROD AND STIRRUP ASSEMBLY INSTALLED IN 1987 REHAB. SEE SHEETS S5-EX THRU S7-EX FOR DESIGNATION AND DIMENSIONS.
3. YOKE ASSEMBLY INSTALLED IN 1938 REHAB. SEE SHEET S3-EX.
4. LOWER CHORD EYEBARS SEE SHEET S3-EX.
5. TRUSS MEMBERS SEE SHEET S2-EX.

NOTE: THE ORIGINAL COMPONENTS OF THE CONNECTIONS ARE SYMETRIC ABOUT PANEL POINT 7 (CONNECTIONS AT PP5' ARE MIRROR IMAGES OF PP5), BUT THE RETROFITS WERE NOT CONDUCTED SYMETRICALLY. SEE SHEETS S3-EX AND S4-EX FOR DETAILS.

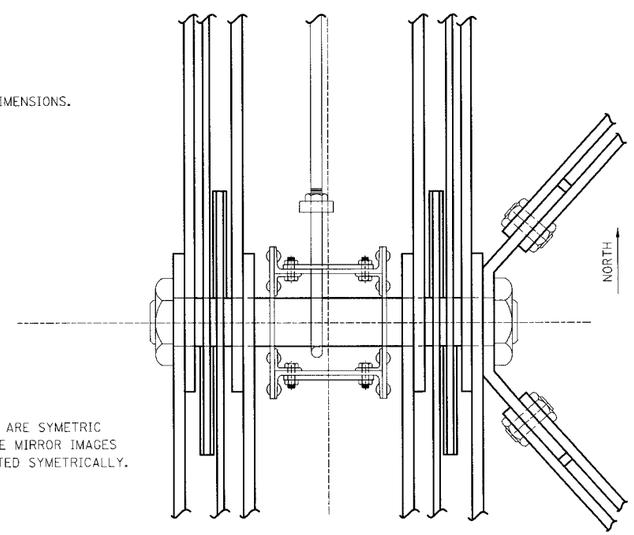

WEST TRUSS L5 – LOWER CHORD

REVISION	DATE

DATE: JAN. 2009	CHECKED BY
DESIGNED BY:	
DETAILED BY: J. ROSE	D.E. RUST

Commonwealth of Kentucky
DEPARTMENT OF HIGHWAYS

COUNTY: **FRANKLIN**

ROUTE: **ST. CLAIR STREET** | CROSSING: **KENTUCKY RIVER**

WEST TRUSS L5 CONNECTIONS

PREPARED BY: *PALMER ENGINEERING CO.*

SHEET NO. E-S20

DRAWING NO. 26522

ITEM NUMBER

SHEET LOCATION:

FILE NAME: ...\dgn\ASBUILT_S20.dgn

DATE: 3/23/2009 7:32:04 AM USERNAME:

E-SHEET NAME:

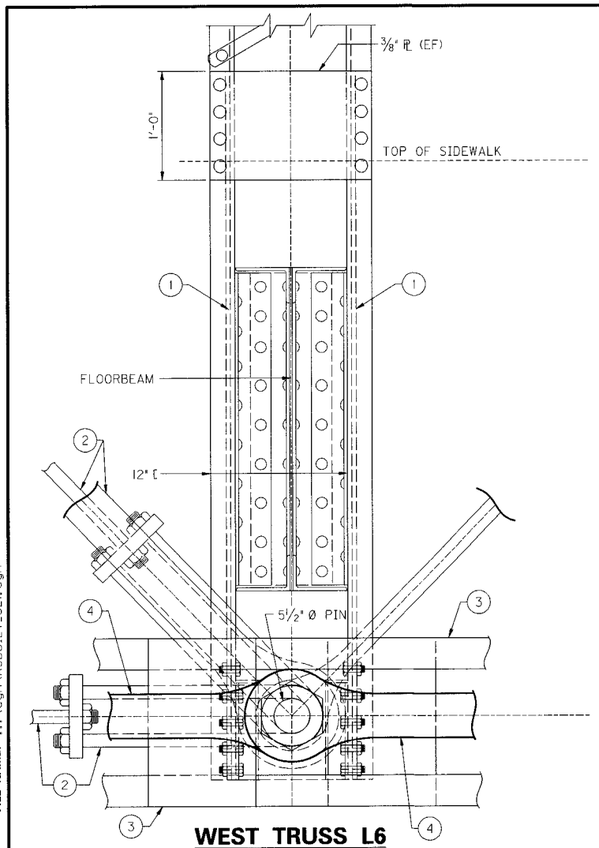

WEST TRUSS L6
(LOOKING DOWNSTREAM)

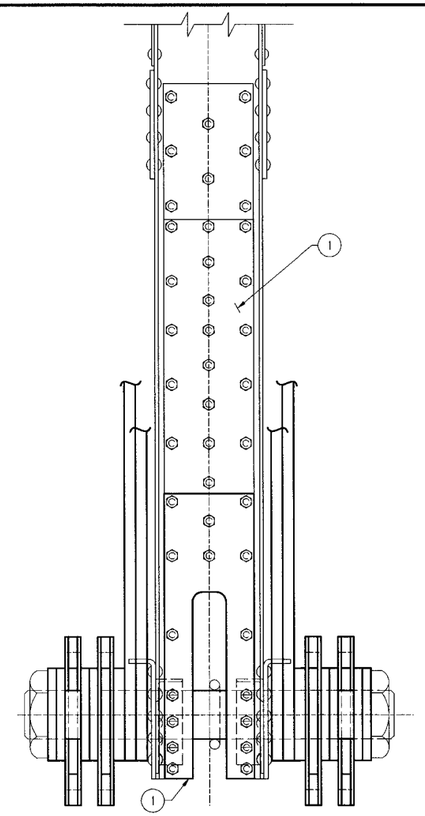

WEST TRUSS L6
(LOOKING NORTH)

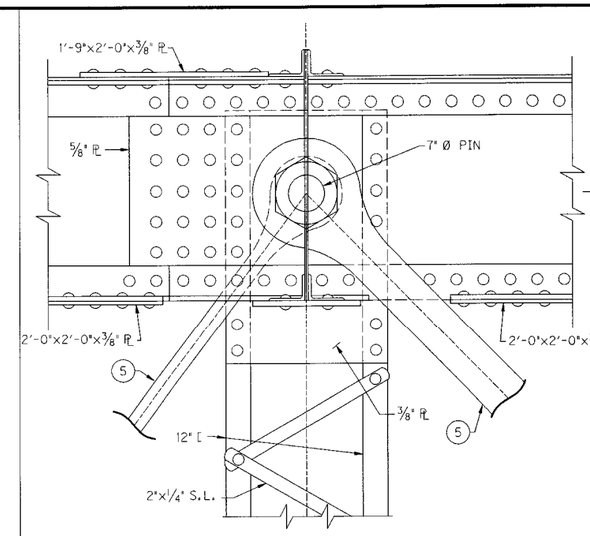

WEST TRUSS U6
(LOOKING DOWNSTREAM)

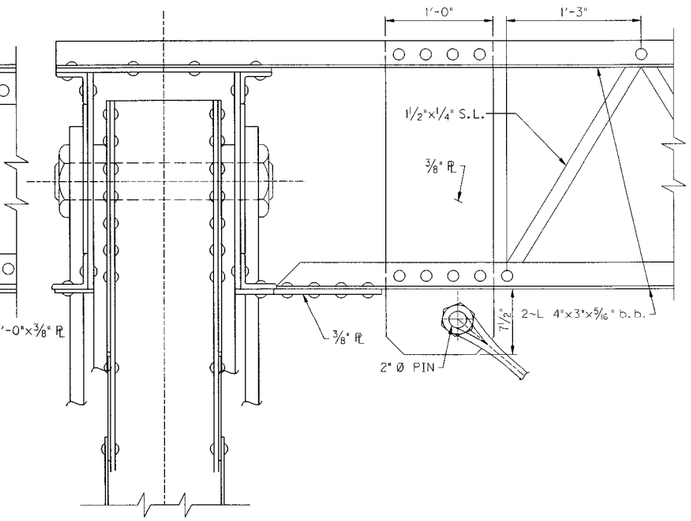

WEST TRUSS U6
(LOOKING NORTH)

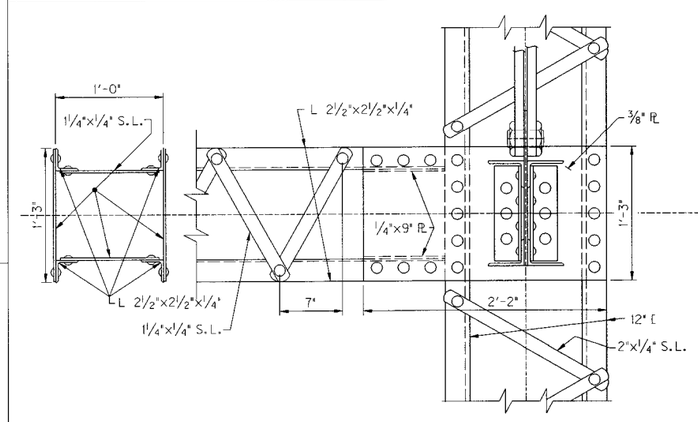

WEST TRUSS M6
(LOOKING DOWNSTREAM)

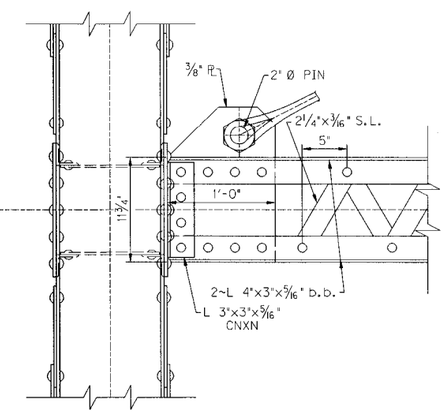

WEST TRUSS M6
(LOOKING NORTH)

1. PLATES P2 & P3 PREVIOUSLY INSTALLED IN 1987 REHAB. SEE SHEETS S5-EX THRU S7-EX. BOLT PATTERNS BASED ON ORIGINAL RIVETS AND 1987 PLANS, BUT VARY.
2. ROD AND STIRRUP ASSEMBLY INSTALLED IN 1987 REHAB. SEE SHEETS S5-EX THRU S7-EX FOR DESIGNATION AND DIMENSIONS.
3. YOKE ASSEMBLY INSTALLED IN 1938 REHAB. SEE SHEET S3-EX.
4. LOWER CHORD EYEBARS SEE SHEET S3-EX.
5. TRUSS MEMBERS SEE SHEET S2-EX.

NOTE: THE ORIGINAL COMPONENTS OF THE CONNECTIONS ARE SYMETRIC ABOUT PANEL POINT 7 (CONNECTIONS AT PP6' ARE MIRROR IMAGES OF PP6), BUT THE RETROFITS WERE NOT CONDUCTED SYMETRICALLY. SEE SHEETS S3-EX AND S4-EX FOR DETAILS.

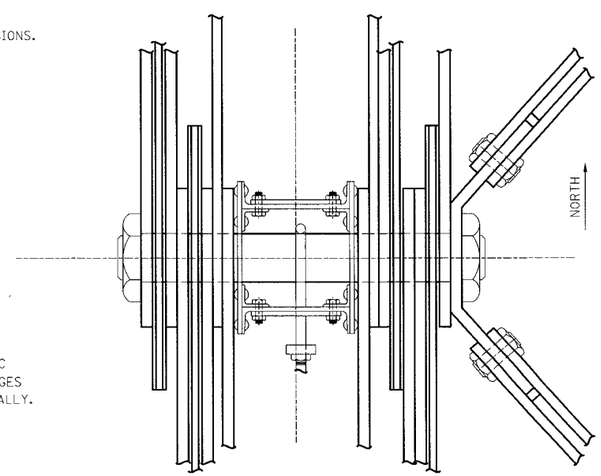

WEST TRUSS L6 – LOWER CHORD

REVISION	DATE

DATE: JAN. 2009	CHECKED BY
DESIGNED BY:	
DETAILED BY: J. ROSE	D.E. RUST

Commonwealth of Kentucky
DEPARTMENT OF HIGHWAYS

COUNTY: **FRANKLIN**

ROUTE: **ST. CLAIR STREET** | CROSSING: **KENTUCKY RIVER**

WEST TRUSS L6 CONNECTIONS

ITEM NUMBER

PREPARED BY: *PALMER ENGINEERING CO.*

SHEET NO. E-S21

DRAWING NO. 26522

SHEET LOCATION:

FILE NAME: ...\dgn\ASBUILT_S21.dgn

USERNAME:

DATE: 3/23/2009 7:32:05 AM

E-SHEET NAME:

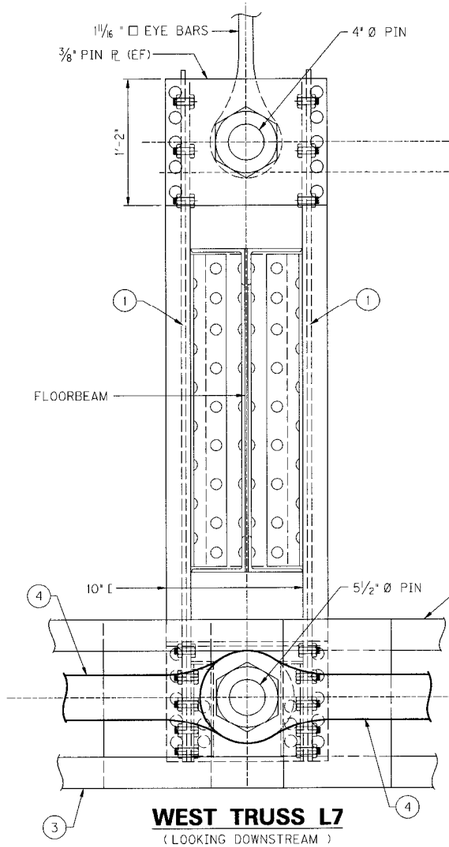

WEST TRUSS L7
(LOOKING DOWNSTREAM)

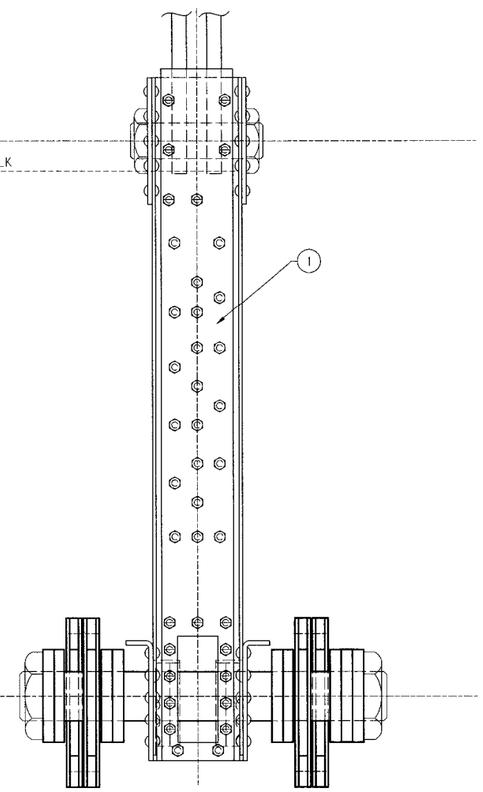

WEST TRUSS L7
(LOOKING NORTH)

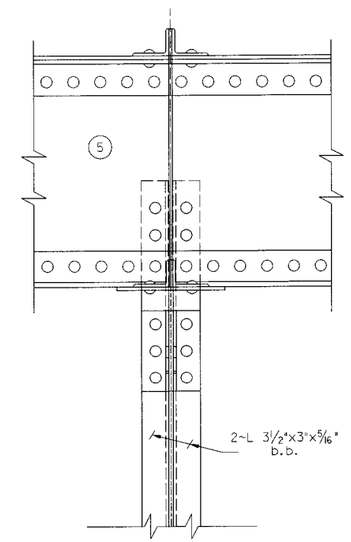

WEST TRUSS U7
(LOOKING DOWNSTREAM)

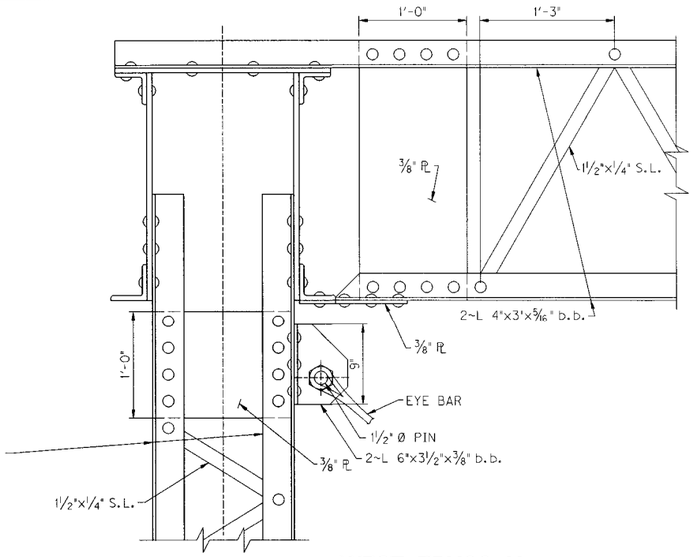

WEST TRUSS U7
(LOOKING NORTH)

1. PLATE P1 PREVIOUSLY INSTALLED IN 1987 REHAB. SEE SHEETS S5-EX THRU S7-EX. BOLT PATTERNS BASED ON ORIGINAL RIVETS AND 1987 PLANS, BUT VARY.
2. ROD AND STIRRUP ASSEMBLY INSTALLED IN 1987 REHAB. SEE SHEETS S5-EX THRU S7-EX FOR DESIGNATION AND DIMENSIONS.
3. YOKE ASSEMBLY INSTALLED IN 1938 REHAB. SEE SHEET S3-EX.
4. LOWER CHORD EYEBARS SEE SHEET S3-EX.
5. TRUSS MEMBERS SEE SHEET S2-EX.

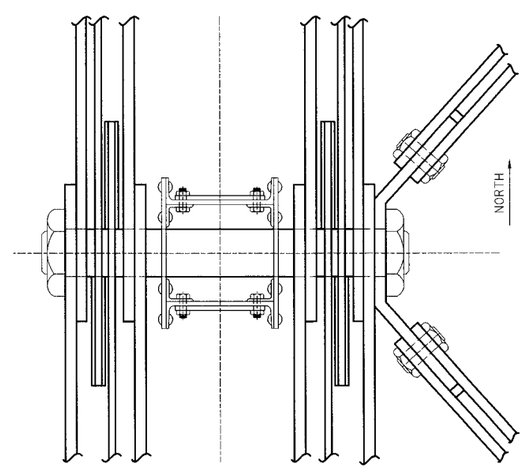

WEST TRUSS L7 – LOWER CHORD

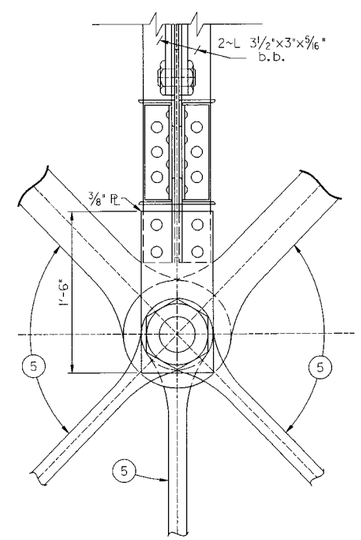

WEST TRUSS M7
(LOOKING DOWNSTREAM)

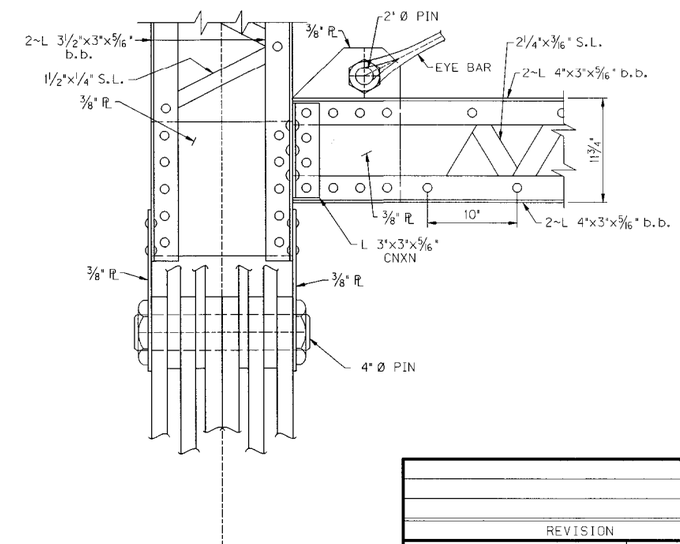

WEST TRUSS M7
(LOOKING NORTH)

REVISION	DATE

DATE: JAN. 2009	CHECKED BY
DESIGNED BY:	
DETAILED BY: J. ROSE	D.E. RUST

Commonwealth of Kentucky
DEPARTMENT OF HIGHWAYS

COUNTY: **FRANKLIN**

ROUTE: **ST. CLAIR STREET** | CROSSING: **KENTUCKY RIVER**

WEST TRUSS L7 CONNECTIONS

ITEM NUMBER

PREPARED BY: *PALMER ENGINEERING CO.*

SHEET NO. E-S22

DRAWING NO. 26522

SHEET LOCATION:

FILE NAME: ...\dgn\ASBUILT_S22.dgn

USERNAME:

DATE: 3/23/2009 7:32:06 AM

E-SHEET NAME:

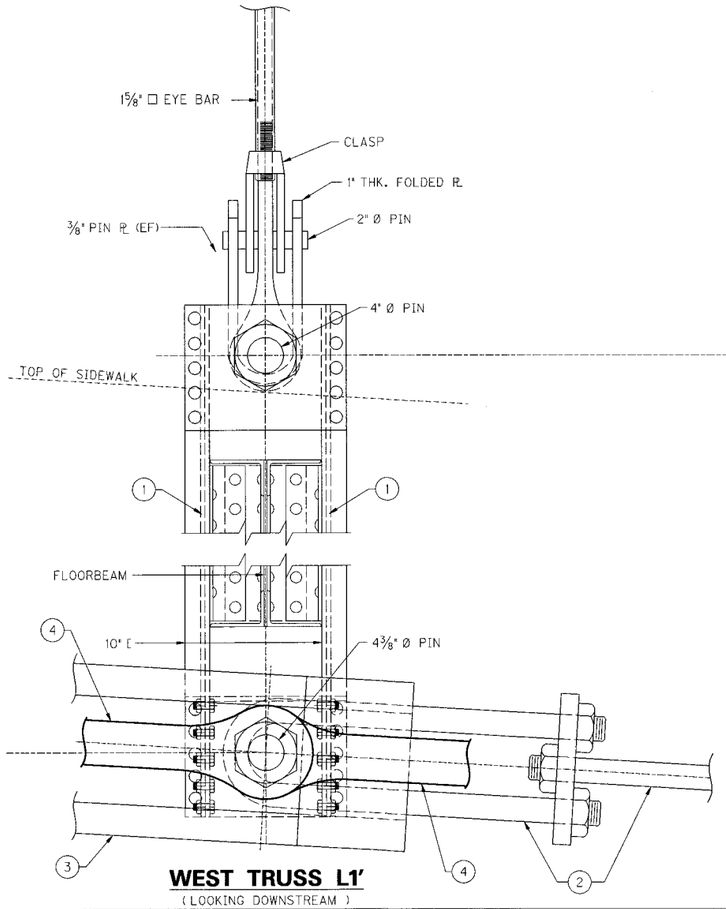

WEST TRUSS L1'
(LOOKING DOWNSTREAM)

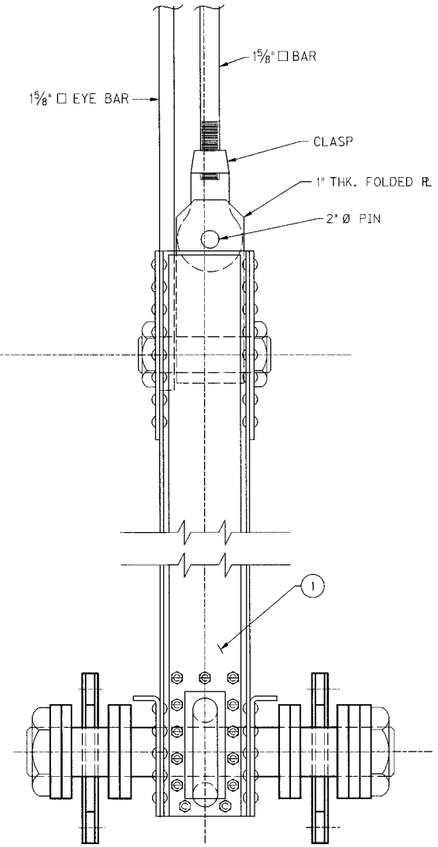

WEST TRUSS L1'
(LOOKING NORTH)

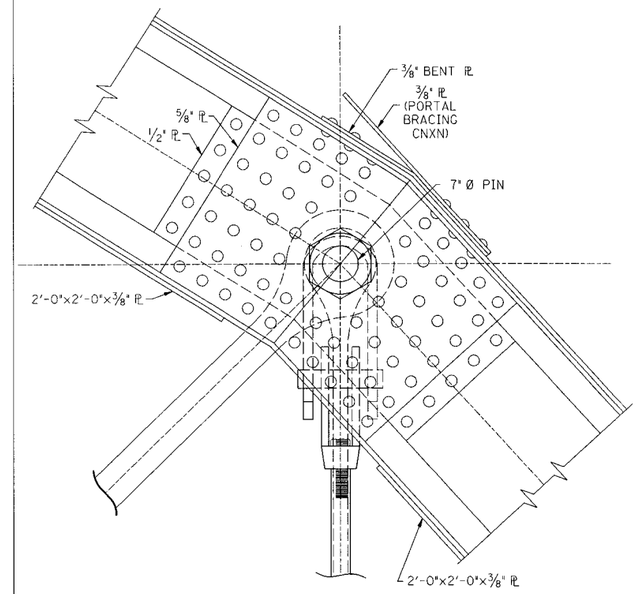

WEST TRUSS U1'
(LOOKING DOWNSTREAM)

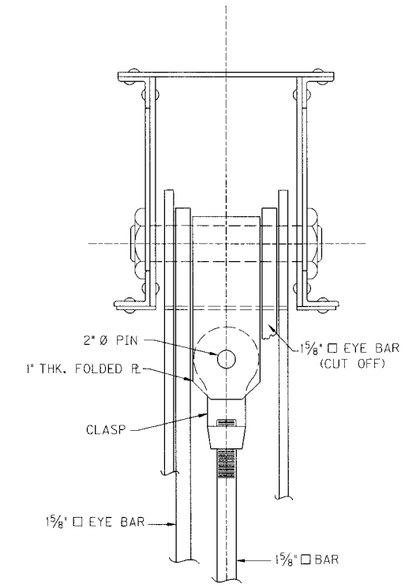

WEST TRUSS U1'
(LOOKING NORTH)

1. PLATE P1 PREVIOUSLY INSTALLED IN 1987 REHAB. SEE SHEETS S5-EX THRU S7-EX. BOLT PATTERNS BASED ON ORIGINAL RIVETS AND 1987 PLANS, BUT VARY.
2. ROD AND STIRRUP ASSEMBLY INSTALLED IN 1987 REHAB. SEE SHEETS S5-EX THRU S7-EX FOR DESIGNATION AND DIMENSIONS.
3. YOKE ASSEMBLY INSTALLED IN 1938 REHAB. SEE SHEET S3-EX.
4. LOWER CHORD EYEBARS SEE SHEET S3-EX.
5. TRUSS MEMBERS SEE SHEET S2-EX.

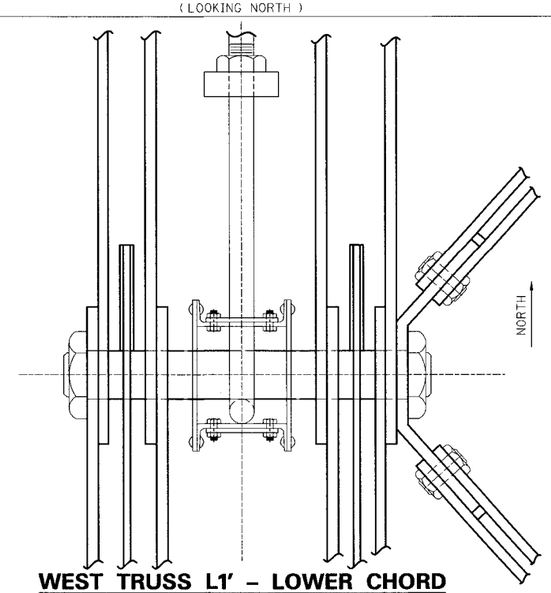

WEST TRUSS L1' – LOWER CHORD

REVISION	DATE

DATE: JAN. 2009	CHECKED BY
DESIGNED BY:	
DETAILED BY: J. ROSE	D.E. RUST

Commonwealth of Kentucky
DEPARTMENT OF HIGHWAYS

COUNTY
FRANKLIN

ROUTE: **ST. CLAIR STREET** | CROSSING: **KENTUCKY RIVER**

WEST TRUSS L1' CONNECTIONS

ITEM NUMBER

PREPARED BY
PALMER ENGINEERING CO.

SHEET NO. E-S23
DRAWING NO. 26522

SHEET LOCATION:
FILE NAME: ...\dgn\ASBUILT_S23.dgn
USERNAME:
DATE: 3/23/2009 7:32:06 AM
E-SHEET NAME:

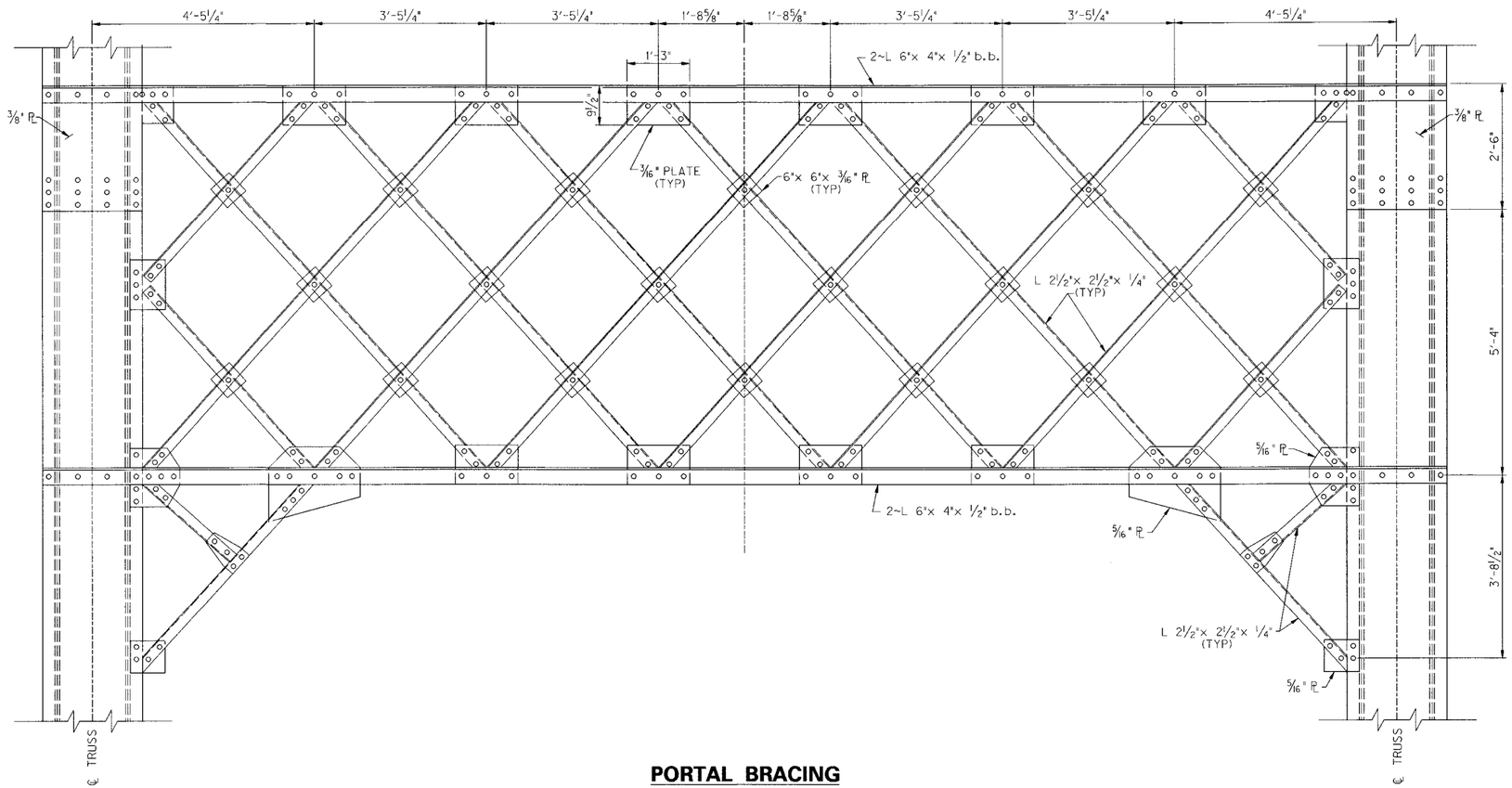

PORTAL BRACING

(TYPICAL AT U1 AND U1')

REVISION	DATE

DATE: JAN. 2009	CHECKED BY
DESIGNED BY:	
DETAILED BY: J. ROSE	D.E RUST

Commonwealth of Kentucky
DEPARTMENT OF HIGHWAYS

COUNTY: **FRANKLIN**

ROUTE: **ST. CLAIR STREET** | CROSSING: **KENTUCKY RIVER**

PORTAL BRACING

ITEM NUMBER

PREPARED BY: *PALMER ENGINEERING CO.*

SHEET NO. E-S24

DRAWING NO. 26522

SHEET LOCATION:

FILE NAME: ...\dgn\ASBUILT_S24.dgn

USERNAME:

DATE: 3/23/2009 7:32:06 AM

E-SHEET NAME:

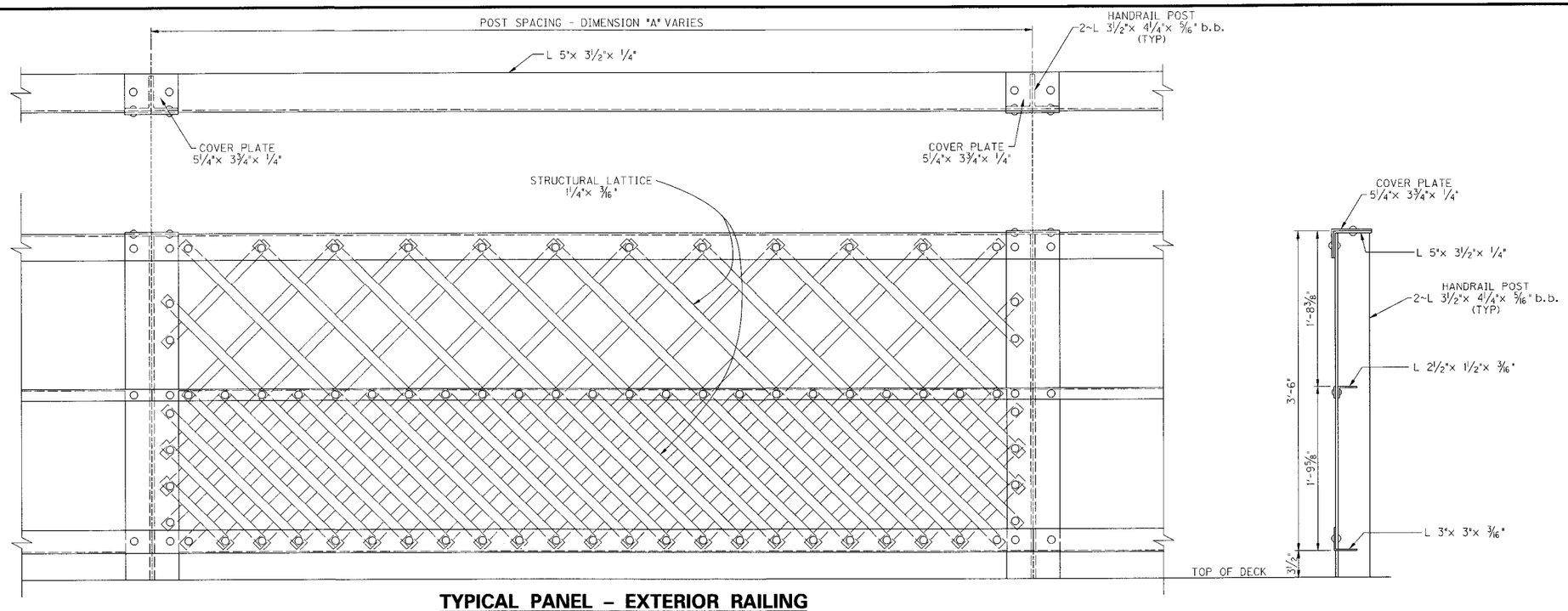

TYPICAL PANEL – EXTERIOR RAILING

	BAY #	DIMENSION "A"
WEST RAIL	1	2'-3½"
	2	4'-10½"
	3-45	9'-7½"
	46	8'-10"
EAST RAIL	1	1'-0"
	2	6'-4½"
	3-44	9'-7½"
	45	8'-10"

MEASURED FROM NORTH END OF BRIDGE WORKING SOUTH

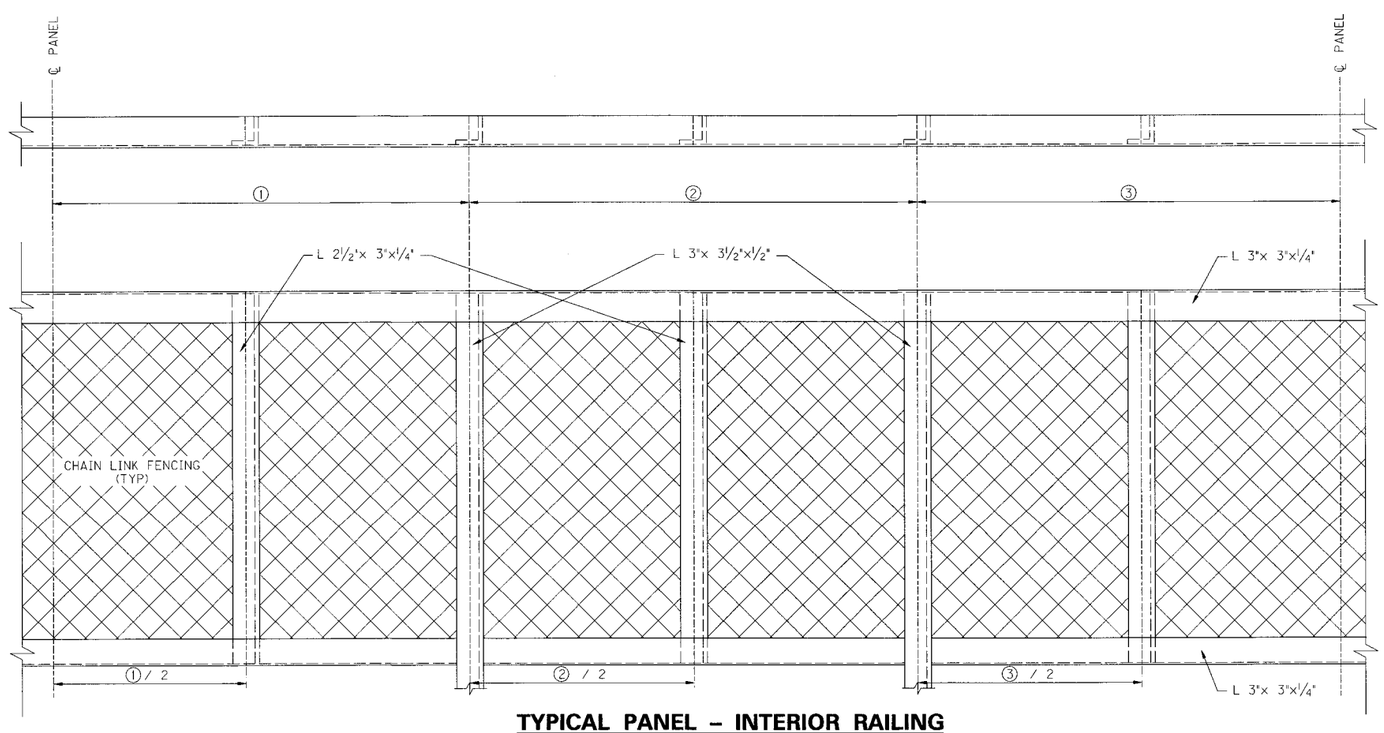

TYPICAL PANEL – INTERIOR RAILING

EAST TRUSS

PANEL PT.	①	②	③
L1	9	172	45
L2	166	173	9
L3	21	144	183
L4	165	173	9
L5	21	143	184
L6	163	177	8
L7	18	142	186
L6'	162	174	8
L5'	21	144	183
L4'	164	174	10
L3'	18	144	185
L2'	163	174	11
L1'	18	145	71

DISTANCES ARE IN INCHES

WEST TRUSS

PANEL PT.	①	②	③
L1	9	172	45
L2	180	145	22
L3	11	172	167
L4	183	145	20
L5	9	171	168
L6	184	144	21
L7	9	174	160
L6'	184	145	20
L5'	9	174	163
L4'	184	144	23
L3'	10	174	164
L2'	185	145	19
L1'	11	174	164

DISTANCES ARE IN INCHES

REVISION	DATE

DATE: JAN. 2009	CHECKED BY
DESIGNED BY:	
DETAILED BY:	D.E. RUST

Commonwealth of Kentucky
DEPARTMENT OF HIGHWAYS

COUNTY: FRANKLIN

ROUTE: ST. CLAIR STREET | CROSSING: KENTUCKY RIVER

SIDEWALK RAILINGS

ITEM NUMBER

PREPARED BY: PALMER ENGINEERING CO.

SHEET NO. E-S25

DRAWING NO. 26522

SHEET LOCATION:

FILE NAME: ...\dgn\ASBUILT_S25.dgn

USERNAME:

DATE: 3/23/2009 7:32:07 AM

E-SHEET NAME:

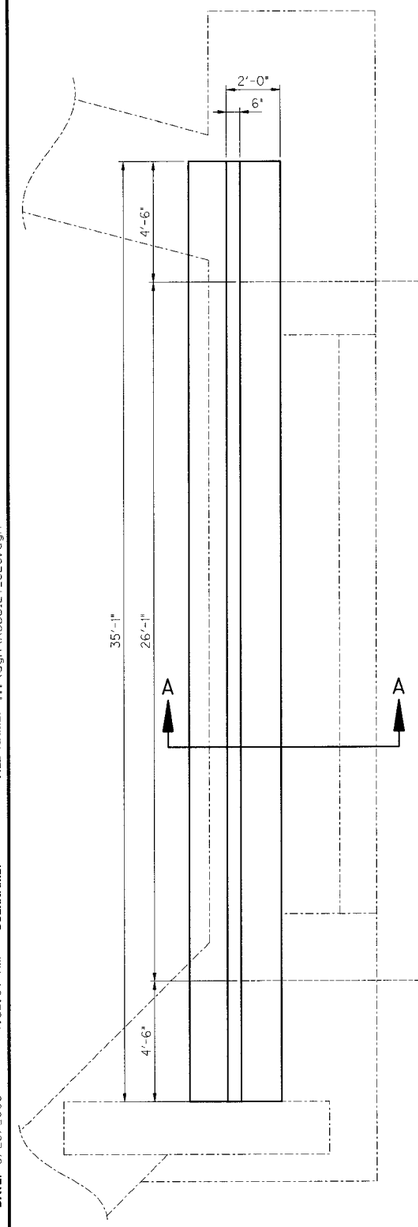

PLAN – SOUTH ABUTMENT

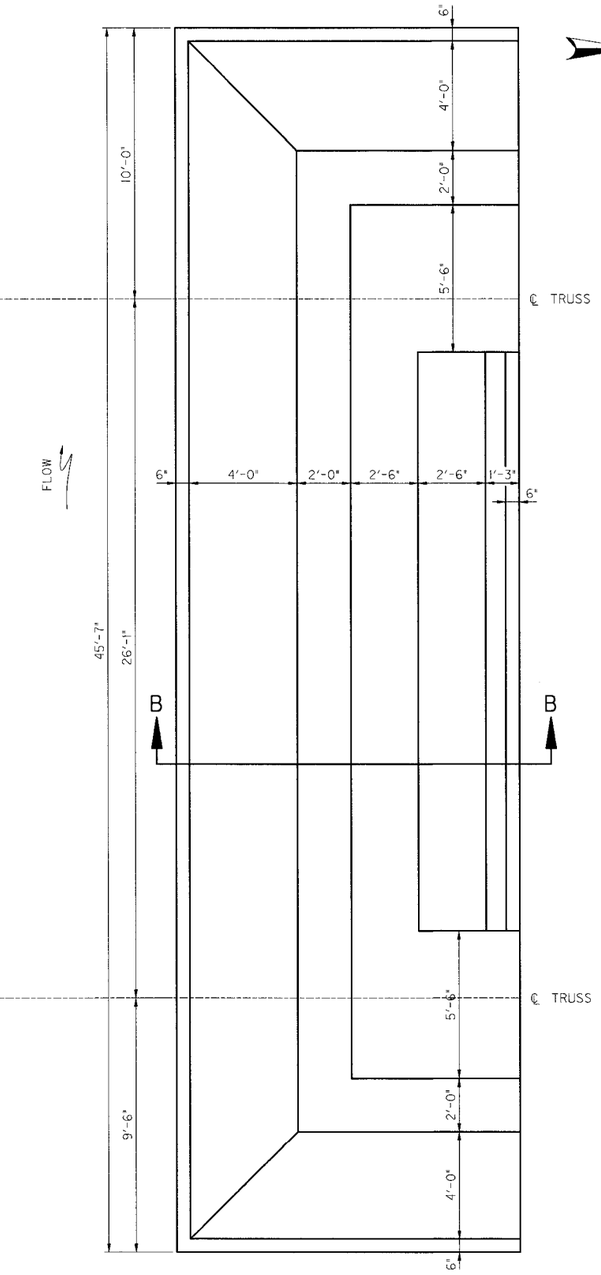

PLAN – NORTH ABUTMENT

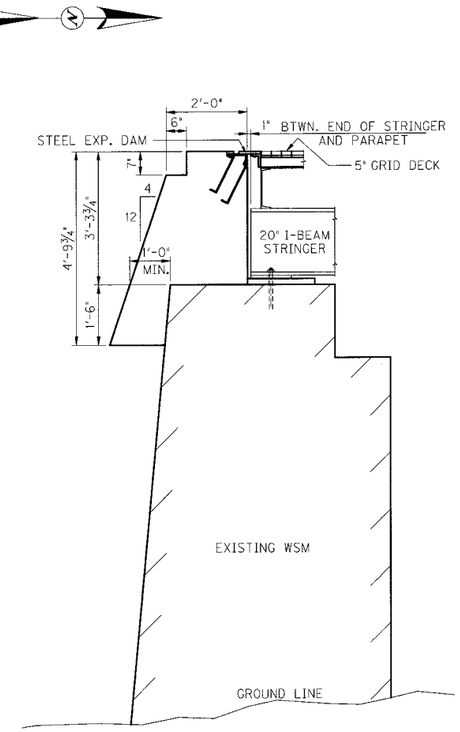

SECTION A–A

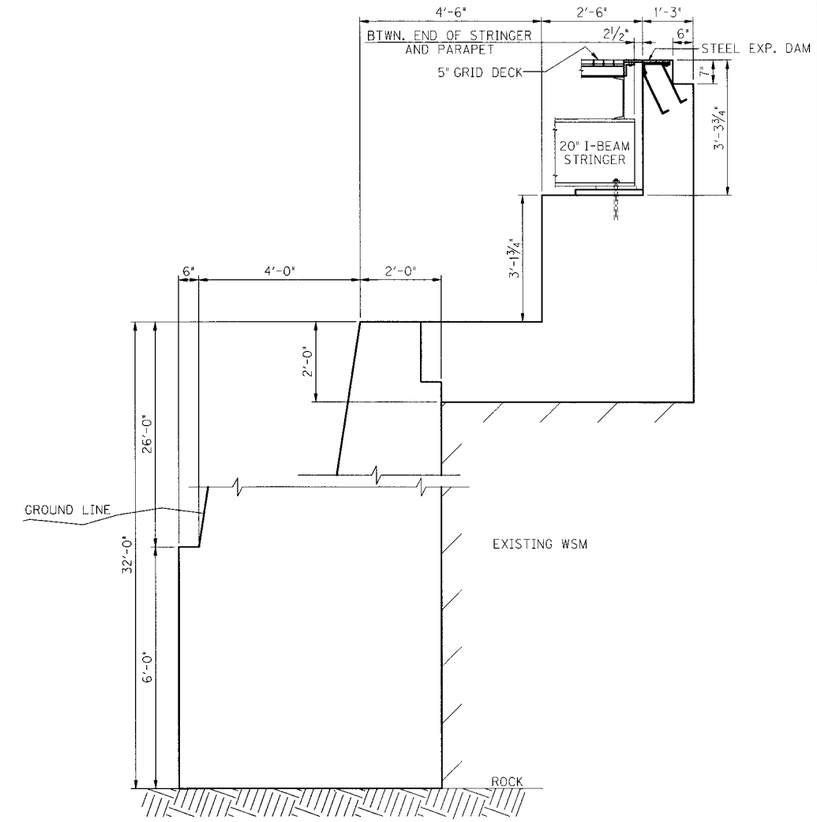

SECTION B–B

REVISION	DATE

DATE: JAN. 2009	CHECKED BY
DESIGNED BY:	
DETAILED BY: J. ROSE	D.E. RUST

Commonwealth of Kentucky
DEPARTMENT OF HIGHWAYS

COUNTY: FRANKLIN

ROUTE: ST. CLAIR STREET | CROSSING: KENTUCKY RIVER

ABUTMENTS

ITEM NUMBER

PREPARED BY: PALMER ENGINEERING CO.

SHEET NO. E-S26

DRAWING NO. 26522

SHEET LOCATION:

FILE NAME: ...\dgn\ASBUILT_S26.dgn

USERNAME:

DATE: 3/23/2009 7:32:07 AM

E-SHEET NAME:

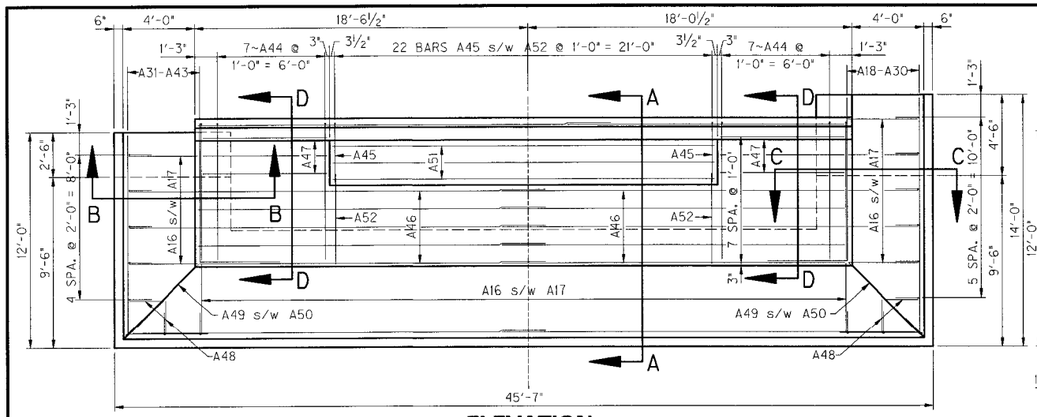

ELEVATION

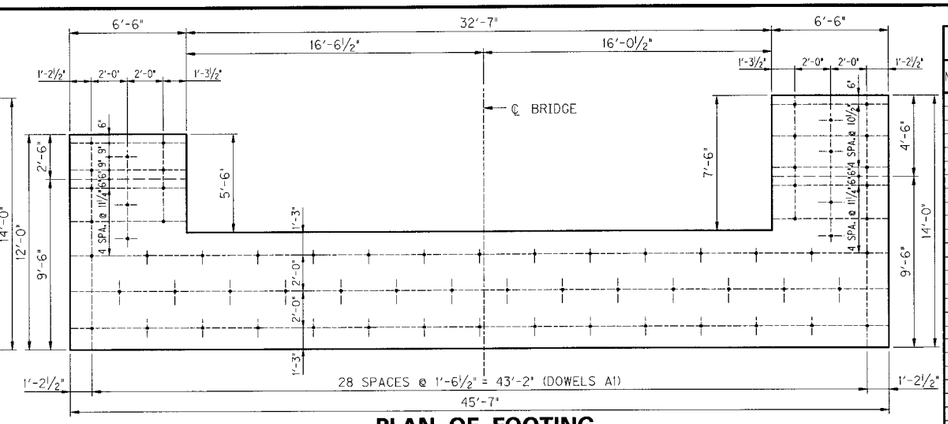

PLAN OF FOOTING

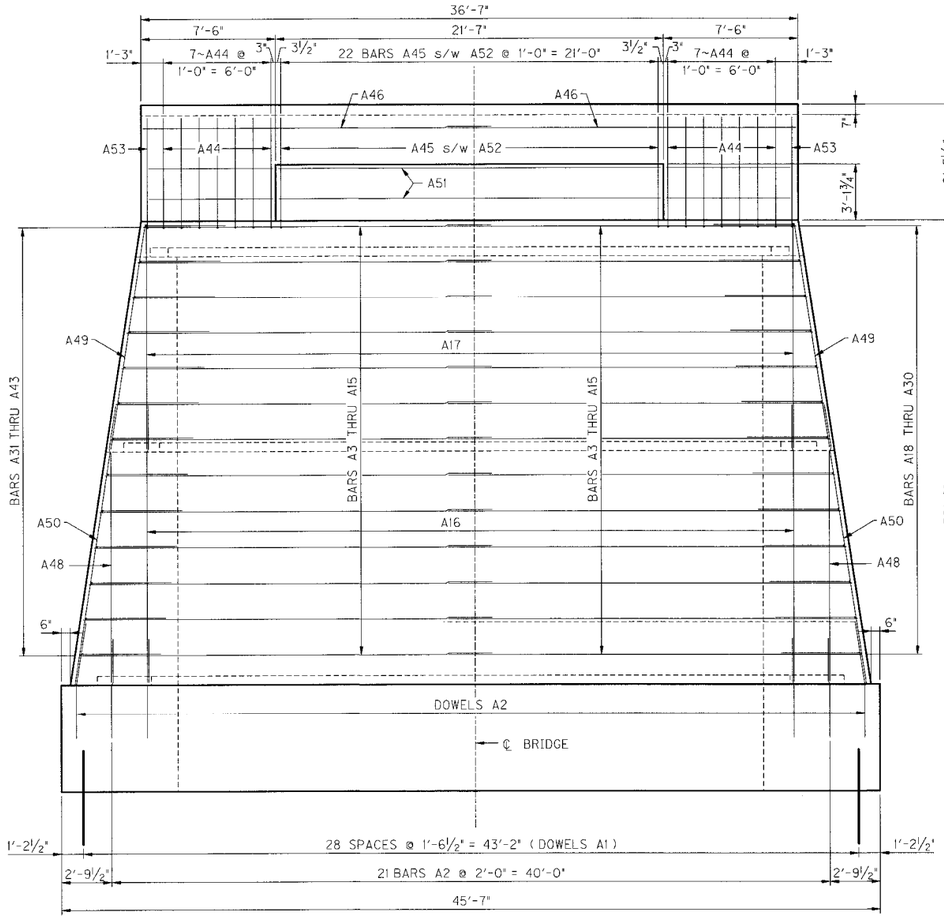

ELEVATION

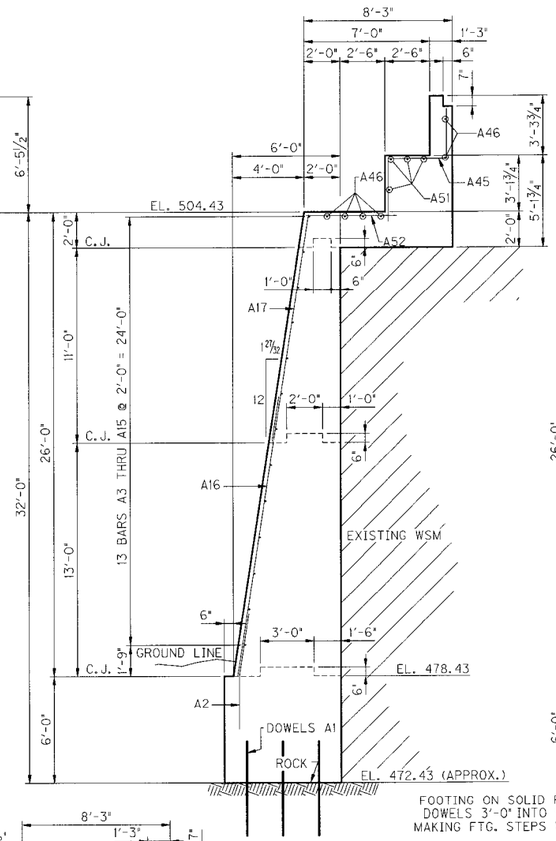

SECTION A–A

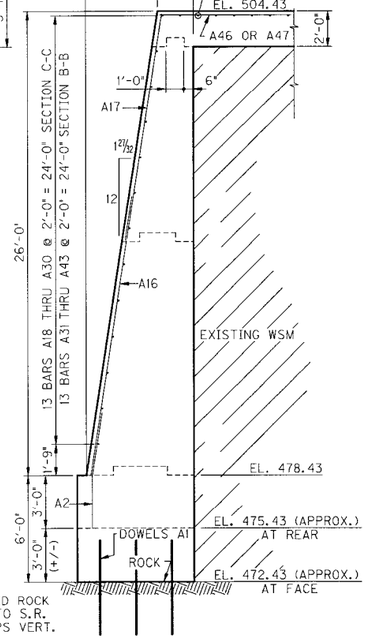

SECTION B–B
SECTION C–C

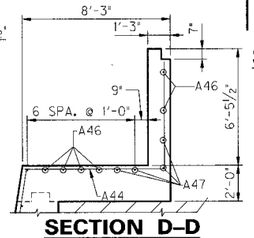

SECTION D–D

C.J. - CONSTRUCTION JOINT

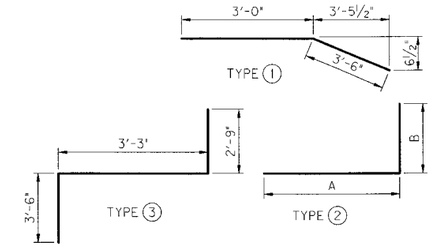

BILL OF REINFORCEMENT

MARK	TYPE	NO.	SIZE	LENGTH FT.	LENGTH IN.	LOCATION	A FT.	A IN.	B FT.	B IN.
A1	STR.	69	# 8	6	0	FTG. DOWELS				
A2	I	34	# 6	6	6	FTG. DOWELS				
A3	STR.	2	# 6	23	8	FF WALL HORIZ.				
A4	STR.	2	# 6	23	4	FF WALL HORIZ.				
A5	STR.	2	# 6	23	0	FF WALL HORIZ.				
A6	STR.	2	# 6	22	8	FF WALL HORIZ.				
A7	STR.	2	# 6	22	4	FF WALL HORIZ.				
A8	STR.	2	# 6	22	0	FF WALL HORIZ.				
A9	STR.	2	# 6	21	8	FF WALL HORIZ.				
A10	STR.	2	# 6	21	4	FF WALL HORIZ.				
A11	STR.	2	# 6	21	0	FF WALL HORIZ.				
A12	STR.	2	# 6	20	8	FF WALL HORIZ.				
A13	STR.	2	# 6	20	4	FF WALL HORIZ.				
A14	STR.	2	# 6	20	0	FF WALL HORIZ.				
A15	STR.	2	# 6	19	8	FF WALL HORIZ.				
A16	STR.	28	# 6	16	6	FF,SIDES VERT.				
A17	STR.	28	# 6	12	10	FF,SIDES VERT.				
A18	2	1	# 8	17	4	HORIZ. E. SIDE	13	0	4	6
A19	2	1	# 8	17	0	HORIZ. E. SIDE	12	8	4	6
A20	2	1	# 8	16	8	HORIZ. E. SIDE	12	4	4	6
A21	2	1	# 8	16	4	HORIZ. E. SIDE	12	0	4	6
A22	2	1	# 8	16	0	HORIZ. E. SIDE	11	8	4	6
A23	2	1	# 8	15	8	HORIZ. E. SIDE	11	4	4	6
A24	2	1	# 8	15	4	HORIZ. E. SIDE	11	0	4	6
A25	2	1	# 8	15	0	HORIZ. E. SIDE	10	8	4	6
A26	2	1	# 8	14	8	HORIZ. E. SIDE	10	4	4	6
A27	2	1	# 8	14	4	HORIZ. E. SIDE	10	0	4	6
A28	2	1	# 8	14	0	HORIZ. E. SIDE	9	8	4	6
A29	2	1	# 8	13	8	HORIZ. E. SIDE	9	4	4	6
A30	2	1	# 8	13	4	HORIZ. E. SIDE	9	0	4	6
A31	2	1	# 8	15	3	HORIZ. W. SIDE	10	11	4	6
A32	2	1	# 8	14	11	HORIZ. W. SIDE	10	7	4	6
A33	2	1	# 8	14	7	HORIZ. W. SIDE	10	3	4	6
A34	2	1	# 8	14	3	HORIZ. W. SIDE	9	11	4	6
A35	2	1	# 8	13	11	HORIZ. W. SIDE	9	7	4	6
A36	2	1	# 8	13	7	HORIZ. W. SIDE	9	3	4	6
A37	2	1	# 8	13	3	HORIZ. W. SIDE	8	11	4	6
A38	2	1	# 8	12	11	HORIZ. W. SIDE	8	7	4	6
A39	2	1	# 8	12	7	HORIZ. W. SIDE	8	3	4	6
A40	2	1	# 8	12	3	HORIZ. W. SIDE	7	11	4	6
A41	2	1	# 8	11	11	HORIZ. W. SIDE	7	7	4	6
A42	2	1	# 8	11	7	HORIZ. W. SIDE	7	3	4	6
A43	2	1	# 8	11	3	HORIZ. W. SIDE	6	11	4	6
A44	2	14	# 8	13	7	PARAPET & SEAT				
A45	3	22	# 8	9	2	PARAPET & SEAT				
A46	STR.	8	# 6	19	9	PARAPET & SEAT				
A47	STR.	8	# 6	6	0	PARAPET & SEAT				
A48	STR.	4	# 6	12	8	CORNER WALL				
A49	STR.	2	# 6	18	2	CORNER WALL				
A50	STR.	2	# 6	23	4	CORNER WALL				
A51	STR.	4	# 6	21	3	STRINGER SEAT				
A52	STR.	22	# 6	5	0	BRIDGE SEAT				
A53	2	2	# 8	9	5	PARAPET	3	6	6	0

REVISION	DATE

DATE: JAN. 2009 — CHECKED BY
DESIGNED BY:
DETAILED BY: J. ROSE — D.E. RUST

Commonwealth of Kentucky
DEPARTMENT OF HIGHWAYS

COUNTY: **FRANKLIN**

ROUTE: **ST. CLAIR STREET** — CROSSING: **KENTUCKY RIVER**

NORTH ABUTMENT

ITEM NUMBER

PREPARED BY: *PALMER ENGINEERING CO.*

SHEET NO. E-S27
DRAWING NO. 26522

SHEET LOCATION:
FILE NAME: ...\dgn\ASBUILT_S27.dgn
USERNAME:
DATE: 3/23/2009 7:32:08 AM
FILE
E-SHEET NAME:

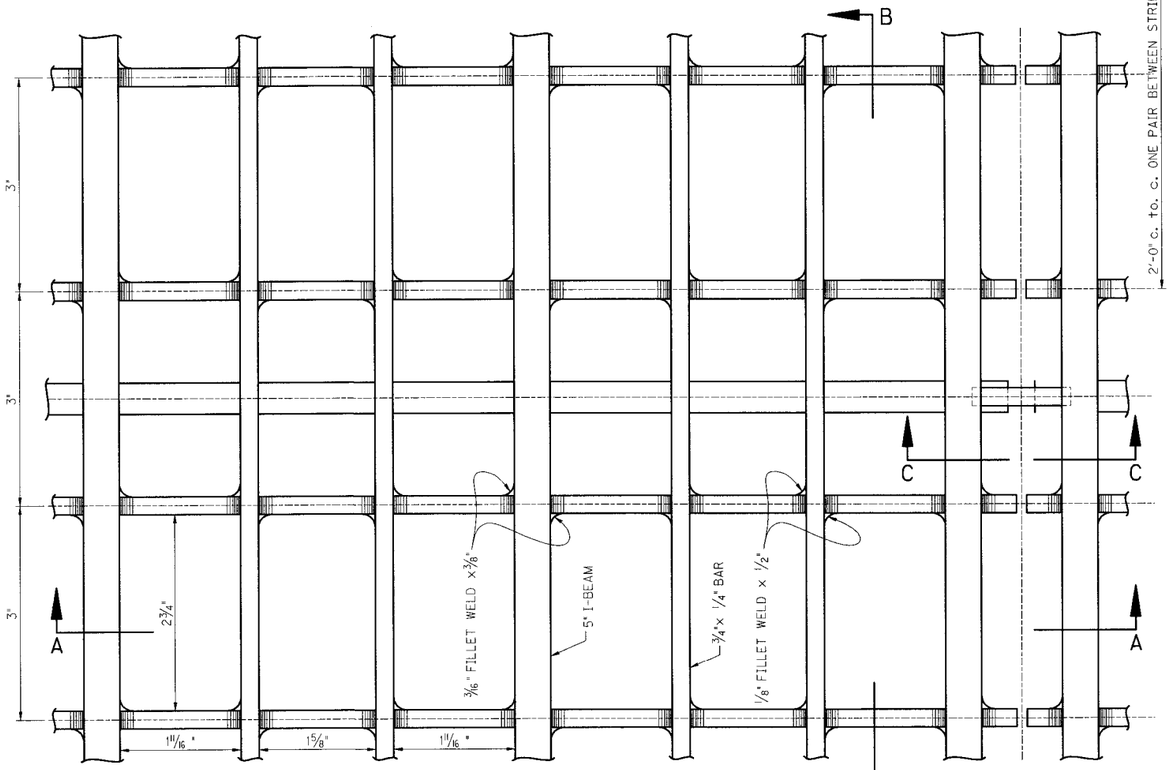

PLAN

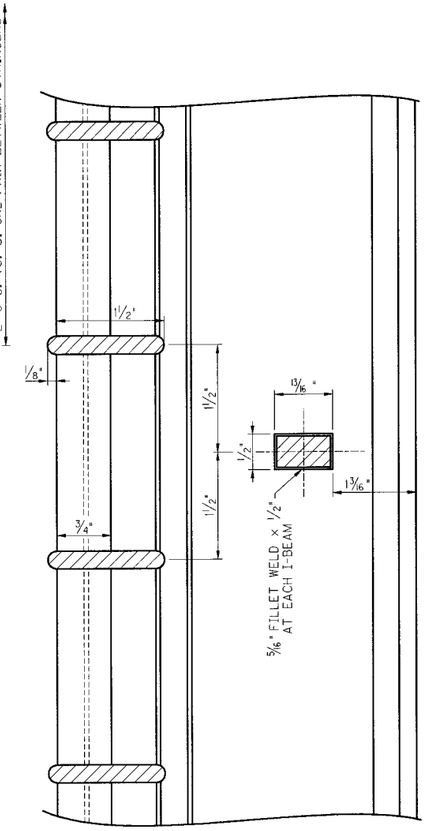

SECTION B–B

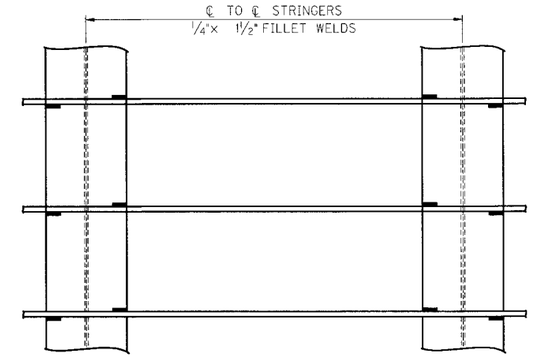

FIELD WELDING TO STRINGERS

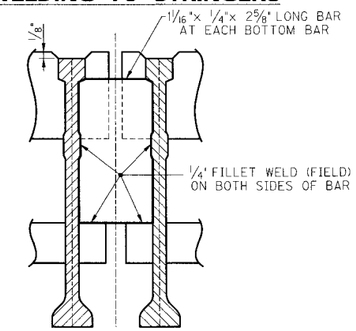

SECTION C–C

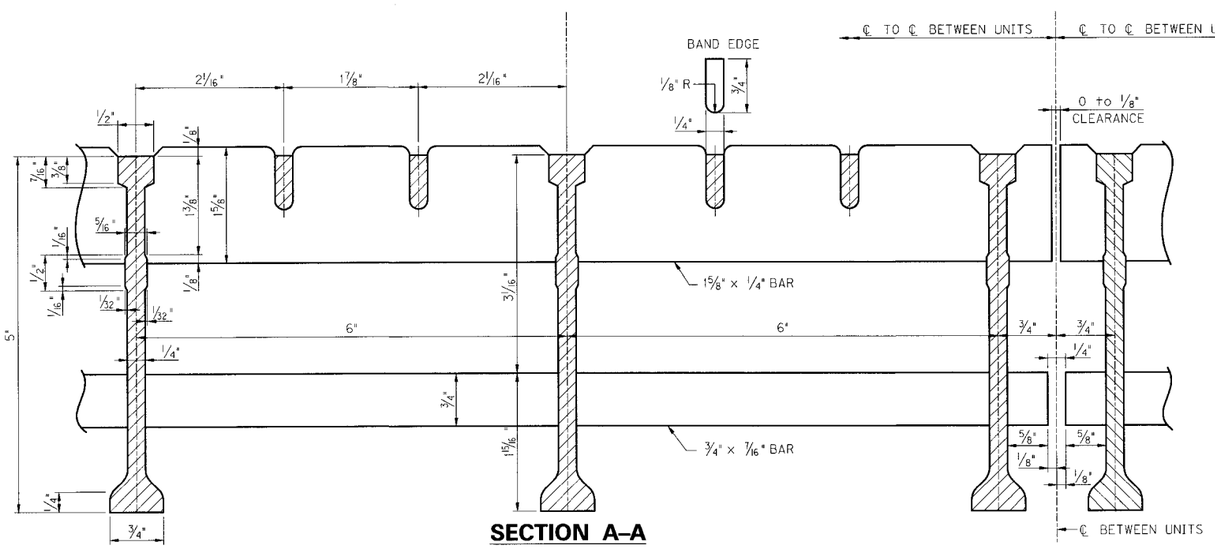

SECTION A–A

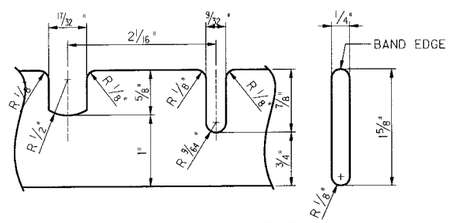

DETAIL OF PUNCHING

(FOR 1 5/8" × 1/4" BAR)

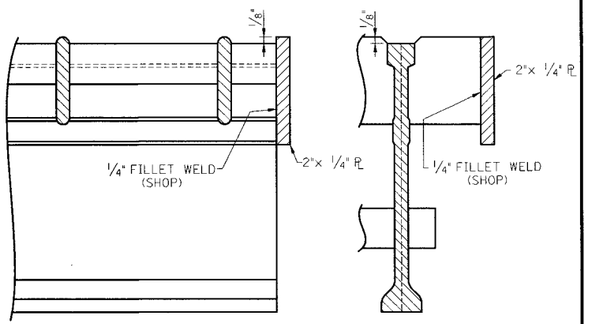

END TRIM

SIDE TRIM

CARNEGIE 5" I-BEAM LOK OPEN FLOOR

REVISION	DATE

DATE: JAN. 2009	CHECKED BY
DESIGNED BY:	
DETAILED BY: J. ROSE	D.E. RUST

Commonwealth of Kentucky
DEPARTMENT OF HIGHWAYS

COUNTY: FRANKLIN

ROUTE: ST. CLAIR STREET | CROSSING: KENTUCKY RIVER

STEEL GRID DECK

ITEM NUMBER

PREPARED BY: PALMER ENGINEERING CO.

SHEET NO. E-S28

DRAWING NO. 26522

SHEET LOCATION:

FILE NAME: ...\dgn\ASBUILT_S28.dgn

USERNAME:

DATE: 3/23/2009 7:32:09 AM

E-SHEET NAME: