MICROFILMED-71 12-11-70

FOR: H.A. SPALDING, INC. CONSULTING ENGRS.

PLANS PREPARED BY: KROBOTH ENGRS INC.

KENTUCKY DEPARTMENT OF HIGHWAYS
ADAIR COUNTY
BOWLING GREEN-SOMERSET PARKWAY
RELOC. PROVIDENCE ROAD OVER B.S.P.

REFERENCE & ESTIMATE OF QUANTITIES

Item / Location	Sheet No.	Concrete Class "A" (Cu. Yds.)	Concrete Class "AA" (Cu. Yds.)	Steel Reinforcement (Lbs.)	Structural Steel (Lump Sum)	High Strength Handrail (Lin. Ft.)	Protective Coating: Styrene Butadiene (Gals.)	Protective Coating: Linseed Oil (Sq. Yds.)	End Bent Backfill (Cu. Yds.)	Piling 12 BP 53: Furnish (Lin. Ft.)	Piling 12 BP 53: Drive (Lin. Ft.)	Slope Prot. 12" Deep Crush. Agg. (Sq. Yds.)	Structure Excavation Common (Cu. Yds.)
Title & Quantities	1												
Notes	2												
Layout	3												
Pile Record	4												
End Bent 1	5,6	31.4	12.6	3,797			1	5	30	476	476	185	85
Pier 1	7	23.7		6,279			2			262	262		30
Pier 2	7	22.3		5,958			2			334	334		10
Pier 3	7	23.4		6,199			2			329	329		30
End Bent 2	5,6	31.4	12.6	3,797			1	5	30	556	556	175	85
Spans 1,2,3 & 4	8,9,10		373.8	120,884			10	640					
High Strength Handrail	3					482							
Construction Elevations	11												
Soundings	12												
Sub-total Substructure		132.2	25.2	26,030	—	—	8	10	60	1957	1957	360	240
Sub-total Superstructure		—	373.8	120,884	①	482	10	640	—	—	—	—	—
Total		132.2	399.0	146,914	①	482	18	650	60	1957	1957	360	240

① Approximate Weight of Structural Steel = 14,210 Lbs.

BILL OF INCIDENTAL MATERIAL

Item	No.	Description	Location
Four Bolt Insert Assembly	4	See Note Sheet 3 & 6	End Bent Wings
Joint Sealing Compound	2	1" x 3 1/2" x 29'-3"	Expansion Dams @ End Bents
Prem. Cork Expan. Jt. Material	4	1/4" x 6" x 1'-7"	Sides of Keys @ End Bents
" " " " "	2	1/4" x 1'-6" x 4'-3"	Top of Keys @ End Bents

SPECIAL PROVISIONS:

No. 8A for Linseed Oil Protective Coating
No. 12 for Joint Sealing Compound
No. 30B for Membrane Curing of Concrete Structures
No. 35B for Class "AA" Concrete
No. 77B for Styrene-Butadiene Protective Coating
No. 79 for Concrete Bridge Deck Finishing Machine
No. 80A for Blast Cleaning and Painting Structural Steel

REFERENCES:

Standard Drawing listed below are the Current Edition and are to be used with these plans.

AE1-D	G354 C	P212 A-A	SS2 B
ED3 C	H116 C	SF2 B	17.40 A

Reloc. Providence Rd. over B.S.P. Sheet 1 of 12

COMMONWEALTH OF KENTUCKY
DEPARTMENT OF HIGHWAYS
FRANKFORT
COUNTY OF
ADAIR

BOWLING GREEN-SOMERSET PKWY.
ROAD BSP 4-1
STATION 4438+83.00 **P.E. PROJECT NO.** SP1-860-1L

CONSTRUCTION PROJECT NO.	MAINTENANCE PROJECT NO.	DRAWING NO.
		18164

DESIGNED BY: RAS CHECKED BY: DGM DATE 11/69
DETAILED BY: RAS CHECKED BY: DGM DATE 11/69
TRACED BY: CHECKED BY: DATE
REVISED DATE REVISED DATE REVISED DATE

GENERAL NOTES

SPECIFICATIONS: THE KENTUCKY DEPARTMENT OF HIGHWAYS STANDARD SPECIFICATIONS FOR ROAD AND BRIDGE CONSTRUCTION, CURRENT EDITION WITH REVISIONS, SHALL APPLY TO THIS PROJECT.

DESIGN LOAD: THIS BRIDGE IS DESIGNED FOR H20-44 LIVE LOAD AS SPECIFIED IN 1969 AASHO SPECIFICATIONS, INCLUDING INTERIM SPECIFICATIONS. THIS BRIDGE IS DESIGNED FOR A WIND LOAD BASED ON A WIND VELOCITY OF 84 m.p.h.

DESIGN STRESSES: FOR REINFORCED CONCRETE USE THE FOLLOWING:

CLASS A	CLASS AA
fs - 20,000 PSI	fs - 20,000 PSI
fc - 1,200 PSI	fc - 1,600 PSI FOR OTHER THAN SLABS
f'c - 3,000 PSI	fc - 1,200 PSI FOR DECK SLABS
u (FOR EMBED.) - 200 PSI	f'c - 4,000 PSI
u (FOR $\mathcal{E}_o$) - 300 PSI	u (FOR EMBED.) - 200 PSI
n - 10	u (FOR $\mathcal{E}_o$) - 300 PSI
	n - 8

FOUNDATION PRESSURE: PILES IN PIER FOOTINGS ARE DESIGNED FOR A MAXIMUM AXIAL LOAD OF 52.3 TONS PER PILE END BENT PILES ARE DESIGNED FOR A MAXIMUM AXIAL LOAD OF 27.9 TONS PER PILE AND A MAXIMUM HORIZONTAL SHEAR OF 0.0 TON PER PILE. THESE MAXIMUMS ARE FOR GROUP I LOADS WITH INCREASES ALLOWED FOR OTHER LOADING GROUPS.

CONCRETE: CLASS "AA" CONCRETE IS TO BE USED THROUGHOUT THE SUPERSTRUCTURE, AND IS TO BE USED IN PORTIONS OF THE SUBSTRUCTURE ABOVE BEARING SEATS. CLASS "A" CONCRETE IS TO BE USED IN THE SUBSTRUCTURE BELOW THE BEARING SEATS.

REINFORCEMENT: DIMENSIONS SHOWN FROM THE FACE OF CONCRETE TO BARS ARE CLEAR DISTANCES UNLESS OTHERWISE SHOWN. SPACING OF BARS IS FROM CENTER TO CENTER OF BARS.

BEVELED EDGES: ALL EXPOSED EDGES SHALL BE BEVELED 7/8" UNLESS OTHERWISE SHOWN.

BILL OF INCIDENTAL MATERIAL: THE QUANTITIES SHOWN IN THE BILL OF INCIDENTAL MATERIAL ARE APPROXIMATE ONLY AND THE CONTRACTOR IS RESPONSIBLE FOR FURNISHING ENOUGH MATERIAL TO COMPLETE THE WORK IN ACCORDANCE WITH THE PLANS AND SPECIFICATIONS. THE COST OF THESE ITEMS IS TO BE INCLUDED IN THE UNIT PRICE BID FOR CLASS "AA" CONCRETE.

PAYMENT FOR STRUCTURAL STEEL: THE LUMP SUM BID FOR STRUCTURAL STEEL SHALL BE FULL PAYMENT FOR ALL STRUCTURAL STEEL, BOLTS, WASHERS, STEEL PINS, LEAD PLATES, MOLTEN LEAD, WELDING AND WELDING MATERIALS, PAINT AND ALL LABOR AND MATERIALS NECESSARY TO ERECT THE STEEL IN ACCORDANCE WITH THE PLANS AND SPECIFICATIONS. THE APPROXIMATE WEIGHT OF STRUCTURAL STEEL SHOWN IN THE ESTIMATE OF QUANTITIES DOES NOT INCLUDE OVERRUN OR WELD MATERIAL.

PILING: THE CONTRACTOR SHALL USE A STANDARD 12" STRUCTURAL STEEL BEARING PILE @ 53 LBS. SEE STANDARD DRAWING P212A, CURRENT EDITION. PILING SHALL BE DRIVEN TO REFUSAL OR TO SOLID ROCK. TEST PILES SHALL BE DRIVEN WHERE DESIGNATED ON THE PLANS TO DETERMINE THE LENGTH OF PILE REQUIRED. THE TEST PILES SHALL BE ACCURATELY LOCATED SO THAT THEY MAY BE USED IN THE FINISHED STRUCTURE.

PAINT: ALL STRUCTURAL STEEL, SHALL BE CLEANED AND PAINTED IN ACCORDANCE WITH THE SPECIAL PROVISION FOR BLAST CLEANING AND PAINTING STRUCTURAL STEEL, CURRENT EDITION.

HIGH STRENGTH HANDRAIL: THE CONTRACTOR SHALL USE A HIGH STRENGTH ALUMINUM HANDRAIL ACCORDING TO STANDARD DRAWING H116, CURRENT EDITION.

CONSTRUCTION IDENTIFICATION: THE NAMES OF THE PRIME CONTRACTOR AND THE SUB-CONTRACTOR SHALL BE IMPRINTED IN THE CONCRETE WITH ONE INCH LETTERS AT A LOCATION DESIGNATED BY THE ENGINEER. THE CONTRACTOR SHALL FURNISH ALL PLANS, EQUIPMENT AND LABOR NECESSARY TO DO THE WORK FOR WHICH NO DIRECT PAYMENT WILL BE MADE.

MATERIALS: AWS AND ASTM SPECIFICATIONS, CURRENT EDITION, AS DESIGNATED BELOW, SHALL GOVERN THE MATERIALS FURNISHED.

ASTM A36-69	STRUCTURAL STEEL FOR ARMORED EDGES, EXPANSION DAMS, SHOES AND ROCKERS
ASTM A108-69	PINTLES (GRADES 1016 TO 1030 INCLUSIVE)
AWS A5.1-69	MILD STEEL ELECTRODES FOR MANUAL SHIELDED METAL ARC WELDING
ASTM B29-55 (1966)	LEAD PLATES AND MOLTEN LEAD

POURING SEQUENCE: POUR THE GIRDER STEM IN ONE CONTINUOUS OPERATION IN HORIZONTAL LAYERS FOR EACH GIRDER. POUR ENDWALLS AND DIAPHRAMS WITH GIRDER STEM BY PROVIDING VERTICAL CONSTRUCTION JOINTS MIDWAY BETWEEN GIRDERS. POUR SLAB IN ONE CONTINUOUS POUR. THE POURING SEQUENCE OF THE SLAB MAY BE CHANGED WITH THE WRITTEN APPROVAL OF THE ENGINEER.

ANCHOR BOLT HOLES: HOLES OF DEPTH AND DIMENSIONS SHOWN SHALL BE DRILLED FOR ANCHOR BOLTS OR DOWELS BY THE SUPERSTRUCTURE CONTRACTOR WHO SHALL BE RESPONSIBLE FOR DEEPING HOLES DRY IN FREEZING WEATHER. AFTER BASE PLATES ARE PROPERLY SET AND ANCHOR BOLTS ARE PLACED IN DRILLED HOLES, MOLTEN LEAD SHALL BE POURED IN HOLES AND PACKED UNTIL HOLES ARE COMPLETELY FILLED FLUSH TO TOP OF BASE PLATES. THE COST OF DRILLING ANCHOR BOLT HOLES, FURNISHING LEAD, AND FILLING HOLES WITH MOLTEN LEAD SHALL BE INCIDENTAL TO AND INCLUDED IN THE LUMP SUM BID FOR STRUCTURAL STEEL.

MEMBRANE CURING COMPOUND: WHITE PIGMENTED CURING COMPOUND SHALL BE APPLIED TO THE BRIDGE DECK IN ACCORDANCE WITH THE SPECIAL PROVISION, EXCEPT THAT THE MEMBRANE COMPOUND USED SHALL HAVE A RESINOUS BASE.

LINSEED OIL PROTECTIVE COATING: LINSEED OIL PROTECTIVE COATING SHALL BE APPLIED IN ACCORDANCE WITH THE SPECIAL PROVISION, EXCEPT THAT IT SHALL ONLY BE APPLIED TO THE BRIDGE DECK BETWEEN THE GUTTER LINES AND SHALL NOT BE APPLIED UNTIL AFTER THE STYRENE-BUTADIENE PROTECTIVE COATING HAS BEEN APPLIED TO THE CURBS AND PLINTHS.

STYRENE-BUTADIENE PROTECTIVE COATING: STYRENE-BUTADIENE PROTECTIVE COATING SHALL BE APPLIED TO THE TOP SURFACES AND INSIDE FACES OF CURBS, THE TOP AND INSIDE VERTICAL SURFACES OF PLINTHS, THE TOP AND INSIDE EXPOSED SURFACES OF END BENT SIDE WALLS, THE TOP, SIDES AND ENDS OF PIER CAPS, AND THE SEAT OF END BENTS.

NOTES

Relocated Providence Rd. over B.S.P. Sheet 2

COMMONWEALTH OF KENTUCKY
DEPARTMENT OF HIGHWAYS
FRANKFORT
COUNTY OF
ADAIR
BOWLING GREEN-SOMERSET PKWY.
ROAD
STATION 4438+83.00 **P. E. PROJECT NO.**

CONSTRUCTION PROJECT NO.	MAINTENANCE PROJECT NO.	DRAWING NO.
		18164

LETTING DATE

DESIGNED BY WG CHECKED BY DGM DATE 11-69 REVISED
DETAILED BY DATE DATE REVISED
TRACED BY CHECKED BY DATE REVISED

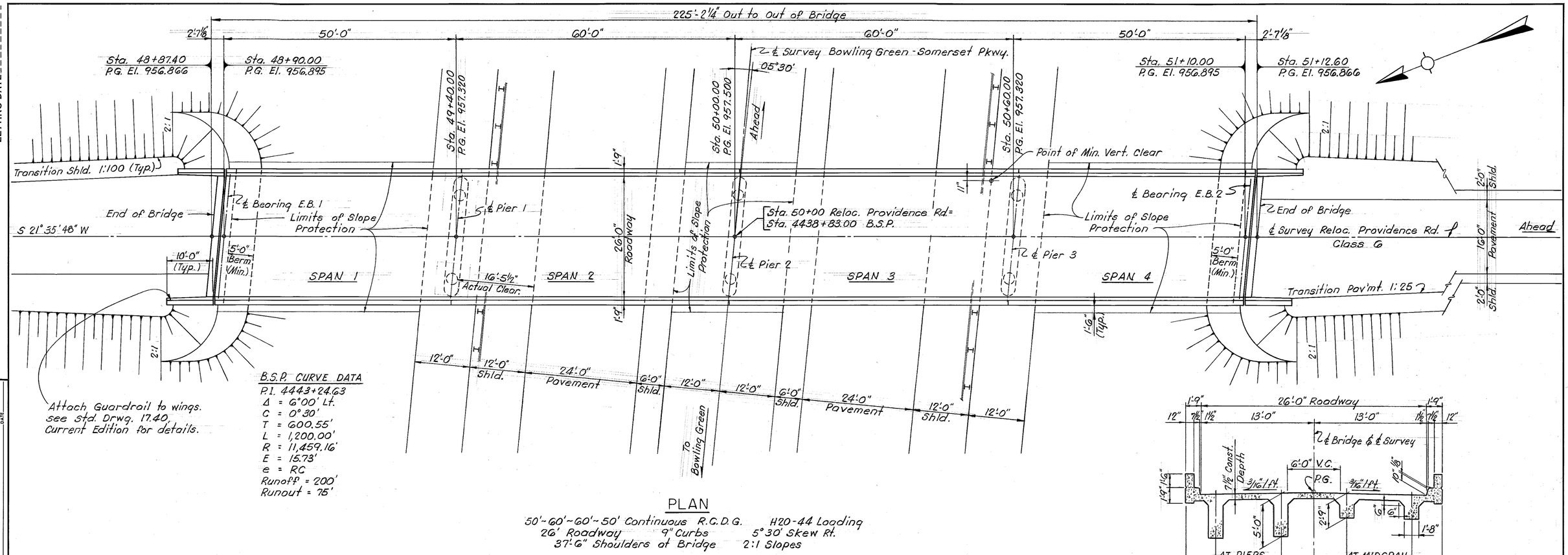

Attach Guardrail to wings. see Std. Drwg. 17.40, Current Edition for details.

B.S.P. CURVE DATA

P.I. 4443+24.63
Δ = 6°00' Lt.
C = 0°30'
T = 600.55'
L = 1,200.00'
R = 11,459.16'
E = 15.73'
e = RC
Runoff = 200'
Runout = 75'

PLAN

50'-60'-60'-50' Continuous R.C.D.G. H20-44 Loading
26' Roadway 9" Curbs 5°30' Skew Rt.
37'-6" Shoulders of Bridge 2:1 Slopes

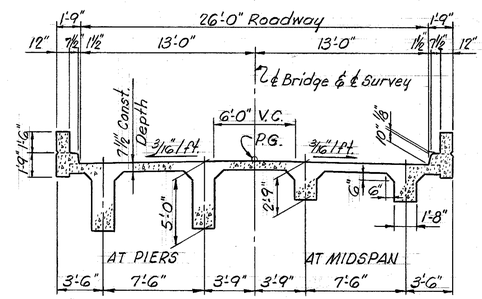

TYPICAL SECTION THRU DECK

Note: For detail of Earth Core, see Std. Drwg. SF 2, Current Edition

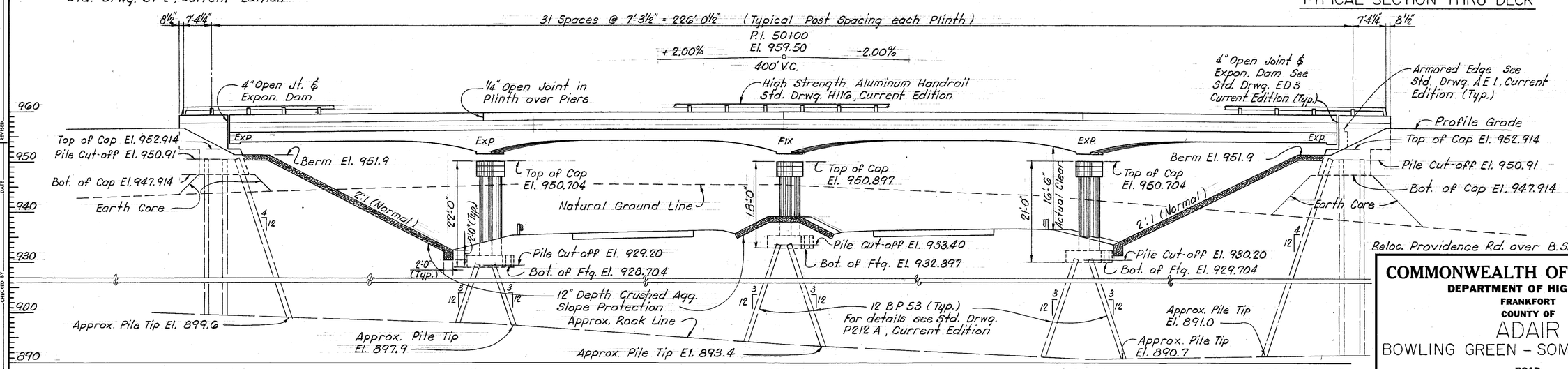

ELEVATION

LAYOUT

Reloc. Providence Rd. over B.S.P. Sheet 3

COMMONWEALTH OF KENTUCKY
DEPARTMENT OF HIGHWAYS
FRANKFORT
COUNTY OF
ADAIR
BOWLING GREEN - SOMERSET PKWY.
ROAD

STATION 4438+83.00 **P. E. PROJECT NO.**

CONSTRUCTION PROJECT NO.	MAINTENANCE PROJECT NO.	DRAWING NO.
		18164

LETTING DATE

DESIGNED BY WTB DATE 11/62 REVISED
DETAILED BY NET CHECKED BY DGM DATE 11/62 REVISED
TRACED BY CHECKED BY DATE REVISED

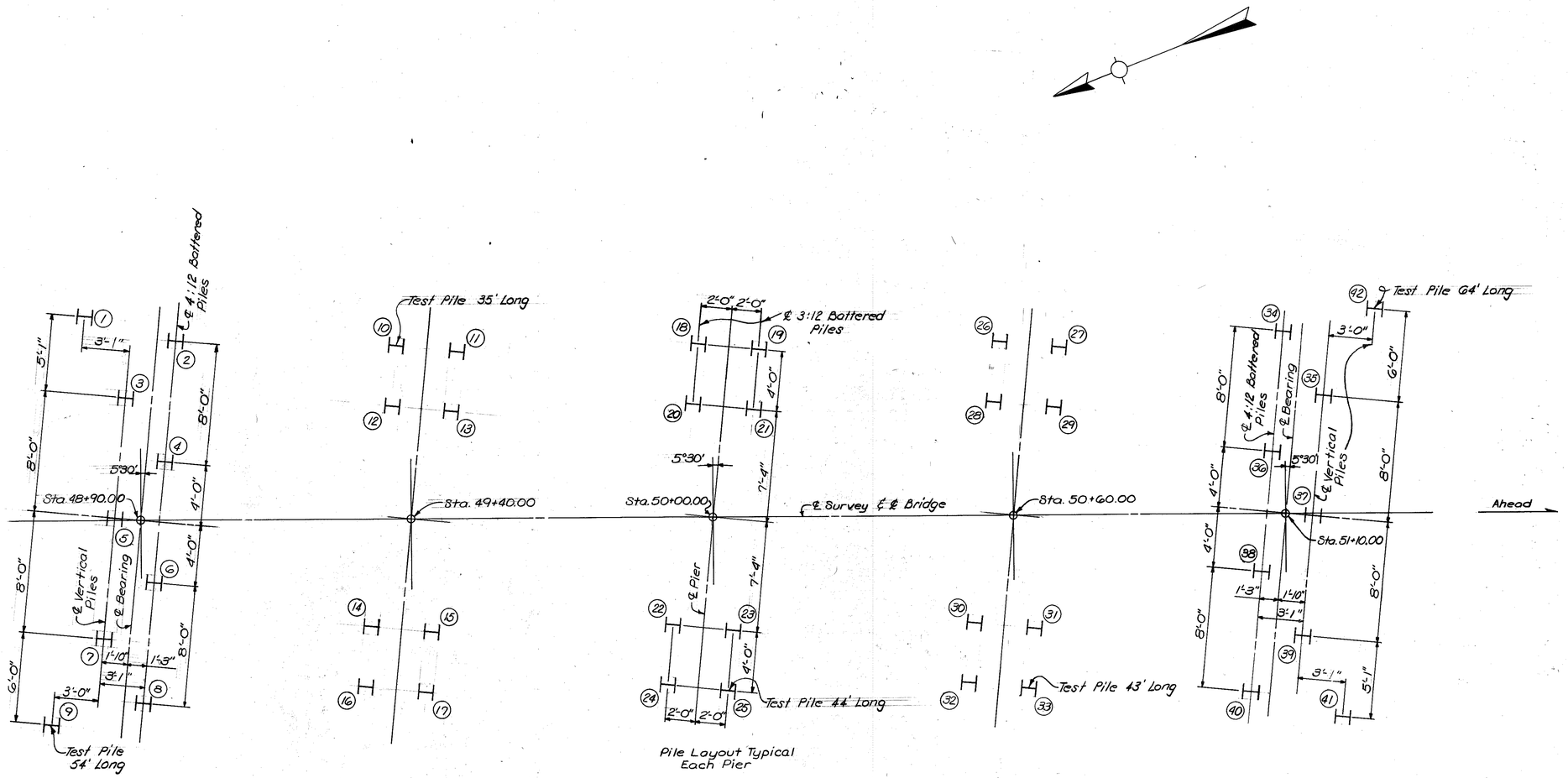

Pile No.	Cutoff Elev.	Tip of Pile Elev.	Pile Lgth (Lin. Ft.)	Calc. Brg. Capy (Tons)
END BENT 1				
1	950.91	899.11	51.80	Refusal
2	"	898.95	54.77	"
3	"	899.45	51.46	"
4	"	899.39	54.31	"
5	"	899.74	51.17	"
6	"	899.39	54.31	"
7	"	899.79	51.12	"
8	"	898.87	54.85	"
9	"	899.74	51.17	"
PIER 1				
10	929.20	898.16	32.00	Refusal
11	"	898.92	31.21	"
12	"	897.75	32.42	"
13	"	899.20	30.92	"
14	"	898.16	32.00	"
15	"	899.61	30.50	"
16	"	899.05	31.08	"
17	"	899.61	30.50	"
PIER 2				
18	933.40	895.00	39.58	Refusal
19	"	894.48	40.12	"
20	"	895.20	39.38	"
21	"	894.67	39.92	"
22	"	893.98	40.63	"
23	"	892.82	41.88	"
24	"	893.87	40.75	"
25	"	893.01	41.68	"
PIER 3				
26	930.20	892.85	38.50	Refusal
27	"	890.42	41.00	"
28	"	893.26	38.08	"
29	"	891.47	39.92	"
30	"	895.92	35.33	"
31	"	891.75	39.68	"
32	"	893.90	37.42	"
33	"	891.73	39.65	"
END BENT 2				
34	950.91	894.19	59.79	Refusal
35	"	890.90	60.01	"
36	"	893.48	60.54	"
37	"	890.66	60.25	"
38	"	896.76	57.08	"
39	"	893.78	57.13	"
40	"	891.38	62.75	"
41	"	896.41	54.50	"
42	"	891.95	58.96	"

Note:

AFTER ALL PILES HAVE BEEN DRIVEN, THE RESIDENT ENGINEER SHALL RECORD FOR EACH PILE, THE TIP-OF-PILE ELEVATION AS DRIVEN, THE LENGTH OF PILE IN PLACE AND THE CALCULATED BEARING CAPACITY AND SHALL RETURN ONE BLUE PRINT COPY OF THIS SHEET WITH THIS DATA TO THE DIRECTOR OF THE DIVISION OF BRIDGES SO THAT THE DATA MAY BE RECORDED ON THE ORIGINAL PLANS. LENGTHS OF PILES IN PLACE SHOWN HEREON ARE THE ACTUAL LENGTHS OF PILES IN THE FINISHED STRUCTURE BELOW CUTOFF ELEVATION ANS ARE NOT NECESSARILY PAY ITEMS. THIS PILE RECORD DOES NOT REPLACE OTHER RECORDS OF PILES REQUIRED TO BE KEPT AND SUBMITTED BY THE RESIDENT ENGINEER.

PILE LAYOUT

All Piles 12 BP 53, See Std. Drwg. P212A, Current Edition

PILE RECORD

Reloc. Providence Road over B.S.P. — Sheet 4

COMMONWEALTH OF KENTUCKY
DEPARTMENT OF HIGHWAYS
FRANKFORT
COUNTY OF
ADAIR
BOWLING GREEN-SOMERSET PKWY.
ROAD
STATION 44+38+83.00 **P. E. PROJECT NO.**

CONSTRUCTION PROJECT NO.	MAINTENANCE PROJECT NO.	DRAWING NO.
		18164

LETTING DATE

DESIGNED BY AF CHECKED BY DGM DATE 11/69 REVISED
DETAILED BY J.C.F CHECKED BY DGM DATE 11/69 REVISED
TRACED BY CHECKED BY DATE REVISED

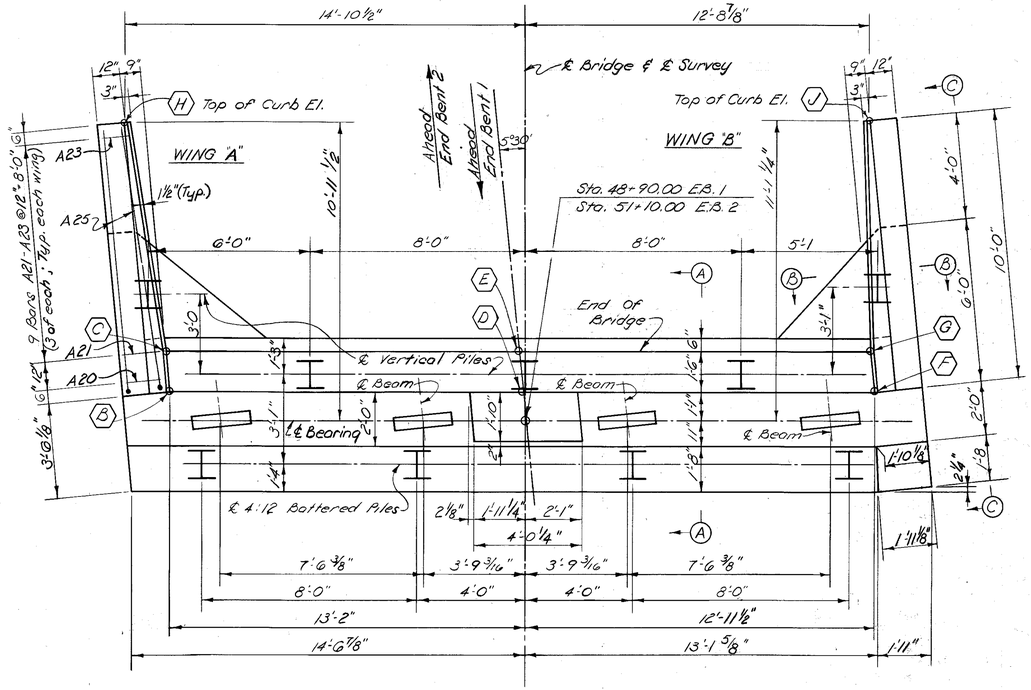

PLAN OF CAP

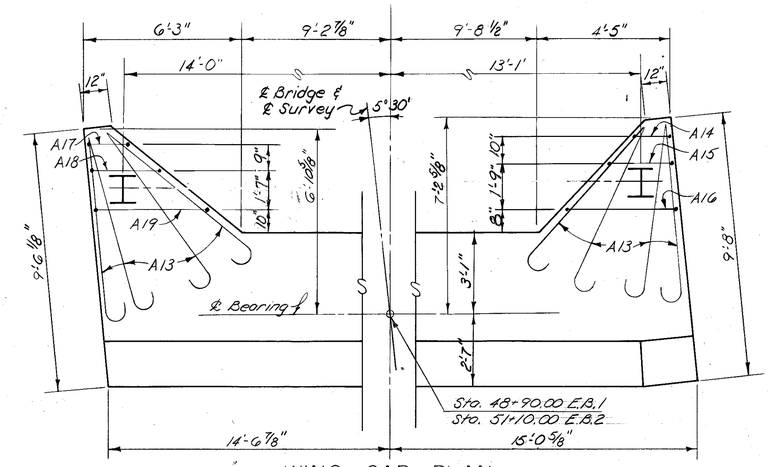

WING CAP PLAN

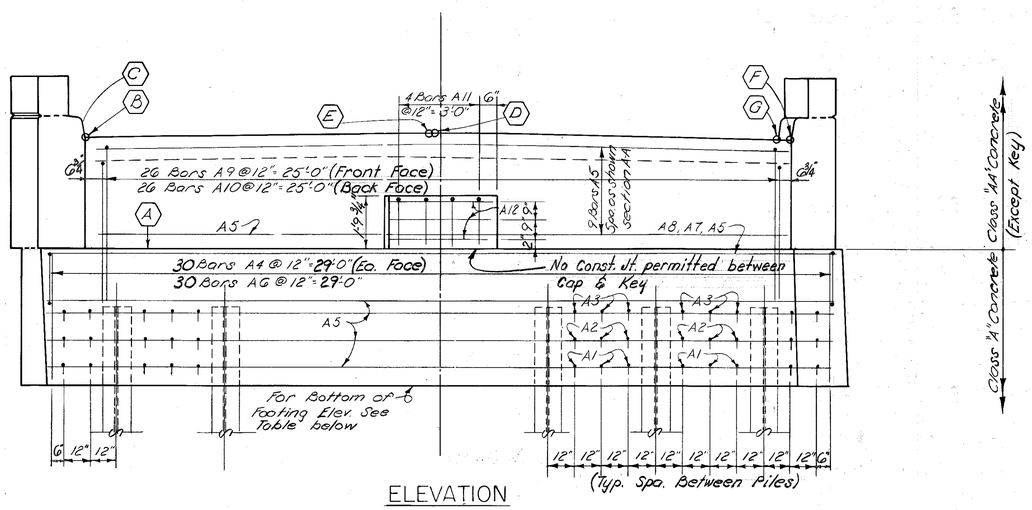

ELEVATION

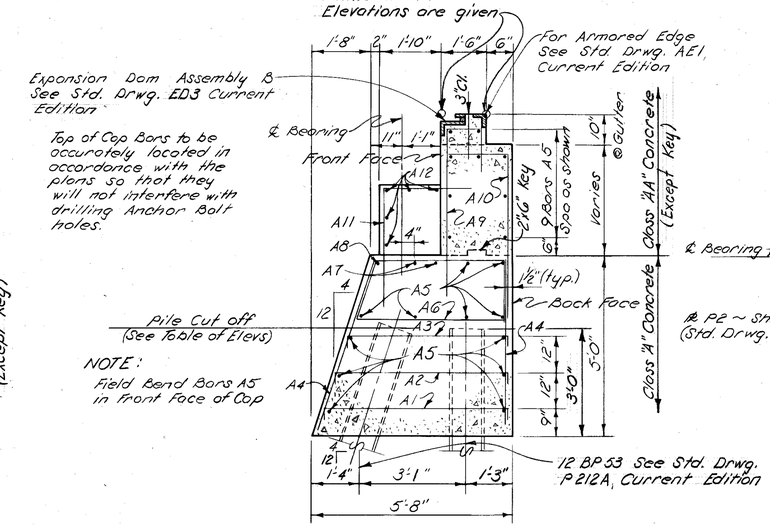

SECTION A-A

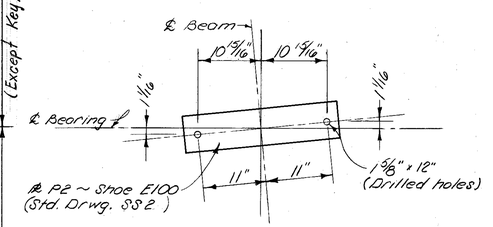

ANCHOR BOLT LAYOUT

END BENT 1 & 2

TABLE OF ELEVATIONS

End Bent	A	B	C	D	E	F	G	H	J	Bot of Flg.	Pile Cut Off
EB 1	952.914	956.666	956.649	956.859	956.843	956.694	956.677	957.392	957.423	947.914	950.91
EB 2	952.914	956.666	956.649	956.859	956.843	956.694	956.677	957.392	957.423	947.914	950.91

LETTING DATE

DESIGNED BY AF	CHECKED BY DGM	DATE 11/69	REVISED
DETAILED BY GDM	CHECKED BY DGM	DATE 11/69	REVISED
TRACED BY	CHECKED BY	DATE	REVISED

Relocated Providence Rd. over B.S.P. Sheet 5

COMMONWEALTH OF KENTUCKY
DEPARTMENT OF HIGHWAYS
FRANKFORT
COUNTY OF
ADAIR
BOWLING GREEN - SOMERSET PKWY.
ROAD
STATION 4438+83.00 **P. E. PROJECT NO.**

CONSTRUCTION PROJECT NO.	MAINTENANCE PROJECT NO.	DRAWING NO.
		18164

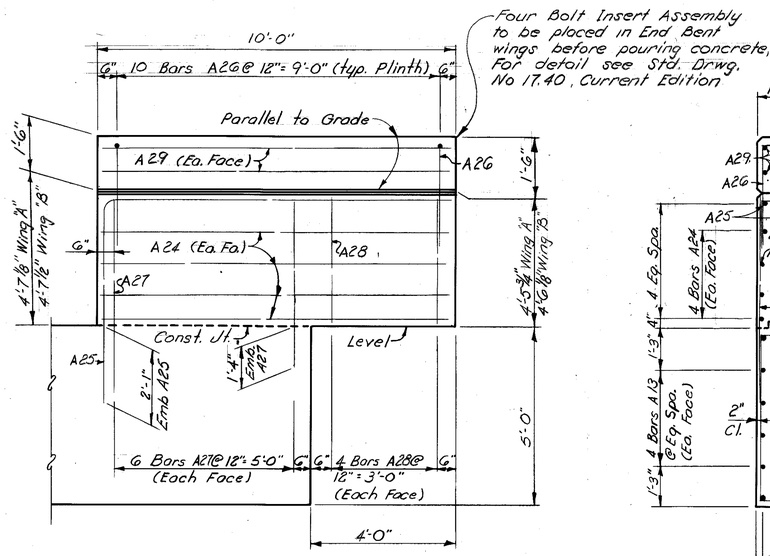

ELEVATION C-C

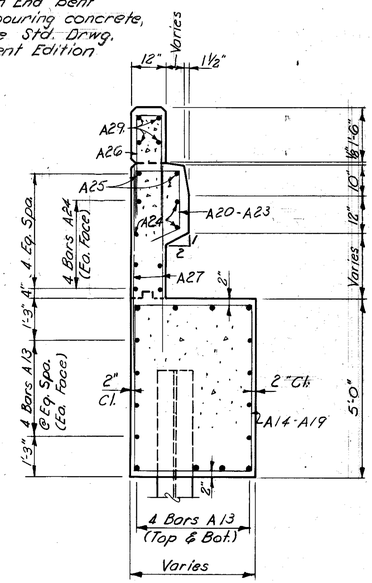

SECTION B-B

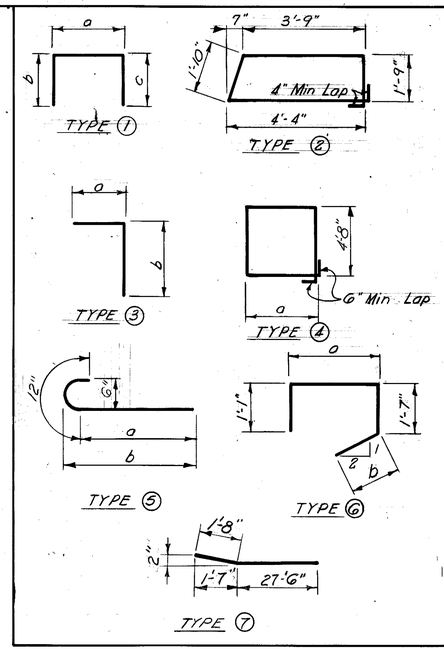

BILL OF REINFORCEMENT

MARK	TYPE	NUMBER E.B.1	NUMBER E.B.2	SIZE	LENGTH Ft.	LENGTH In.	LOCATION	a Ft.	a In.	b Ft.	b In.	c Ft.	c In.
A1	1	22	22	#5	5	9	Cap	5	2	0	4	0	4
A2	1	22	22	#5	5	5	"	4	10	0	4	0	4
A3	1	22	22	#5	5	1	"	4	0	0	4	0	4
A4	Str	60	60	#5	4	9	"						
A5	Str	21	21	#5	29	4	"						
A6	2	30	30	#5	12	1	"						
A7	Str	2	2	#8	29	4	"						
A8	7	1	1	#8	29	2	"						
A9	1	26	26	#6	8	5	Parapet	1	3	5	3	2	0
A10	3	26	26	#6	6	1	"	1	9	4	5		
A11	3	4	4	#5	5	10	Key	3	0	2	10		
A12	Str	5	5	#4	3	9	"						
A13	5	32	32	#6	7	9	Wing Cap	6	9	7	0		
A14	4	1	1	#5	12	7	"	1	3				
A15	4	1	1	#5	14	7	"	2	3				
A16	4	1	1	#5	18	1	"	4	0				
A17	4	1	1	#5	13	1	"	1	6				
A18	4	1	1	#5	15	1	"	2	6				
A19	4	1	1	#5	18	7	"	4	3				
A20	6	2	2	#5	5	4	Wing	1	4½	1	4½		
A21	6	6	6	#5	5	2	"	1	3	1	4		
A22	6	6	6	#5	4	10	"	1	1	1	2		
A23	6	6	6	#5	4	6	"	0	11	1	0		
A24	Str	16	16	#5	9	8	"						
A25	3	4	4	#8	16	1	"	9	8	6	6		
A26	1	20	20	#5	5	10	"	0	9	2	7	2	7
A27	Str	24	24	#5	5	10	"						
A28	Str	16	16	#4	4	3	"						
A29	Str	8	8	#4	9	8	Plinth						

ESTIMATE OF QUANTITIES

Item \ Location	E.B.1	E.B.2
Concrete, Class "A" (Cu. Yds.)	31.4	31.4
Concrete, Class "AA" (Cu. Yds.)	12.6	12.6
Steel Reinforcement (Lbs)	3,797	3,797

END BENTS 1&2

Relocated Providence Rd. over B.S.R. Sheet 6

COMMONWEALTH OF KENTUCKY
DEPARTMENT OF HIGHWAYS
FRANKFORT
COUNTY OF
ADAIR
BOWLING GREEN - SOMERSET PKWY.
ROAD
STATION 4438+83.00 **P. E. PROJECT NO.**

CONSTRUCTION PROJECT NO.	MAINTENANCE PROJECT NO.	DRAWING NO.
		18164

LETTING DATE

DESIGNED BY AF CHECKED BY DGM DATE 4/69 REVISED
DETAILED BY UMP CHECKED BY DGM DATE 11/69 REVISED
TRACED BY CHECKED BY DATE REVISED

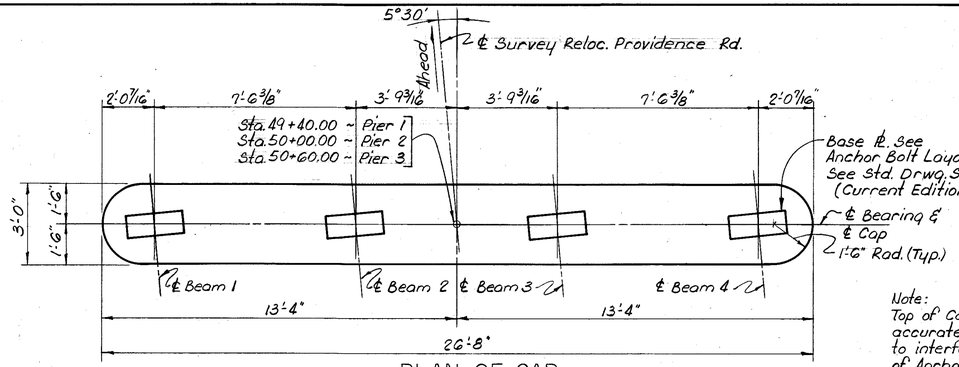

PLAN OF CAP

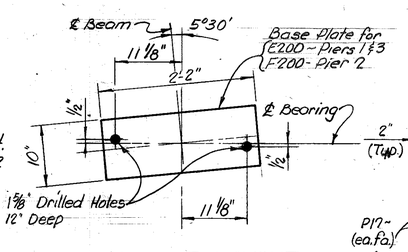

ANCHOR BOLT LAYOUT

Note:
Top of Cap bars are to be accurately spaced as not to interfere with drilling of Anchor Bolt Holes.

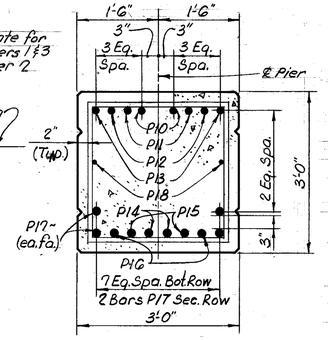

SECTION A-A

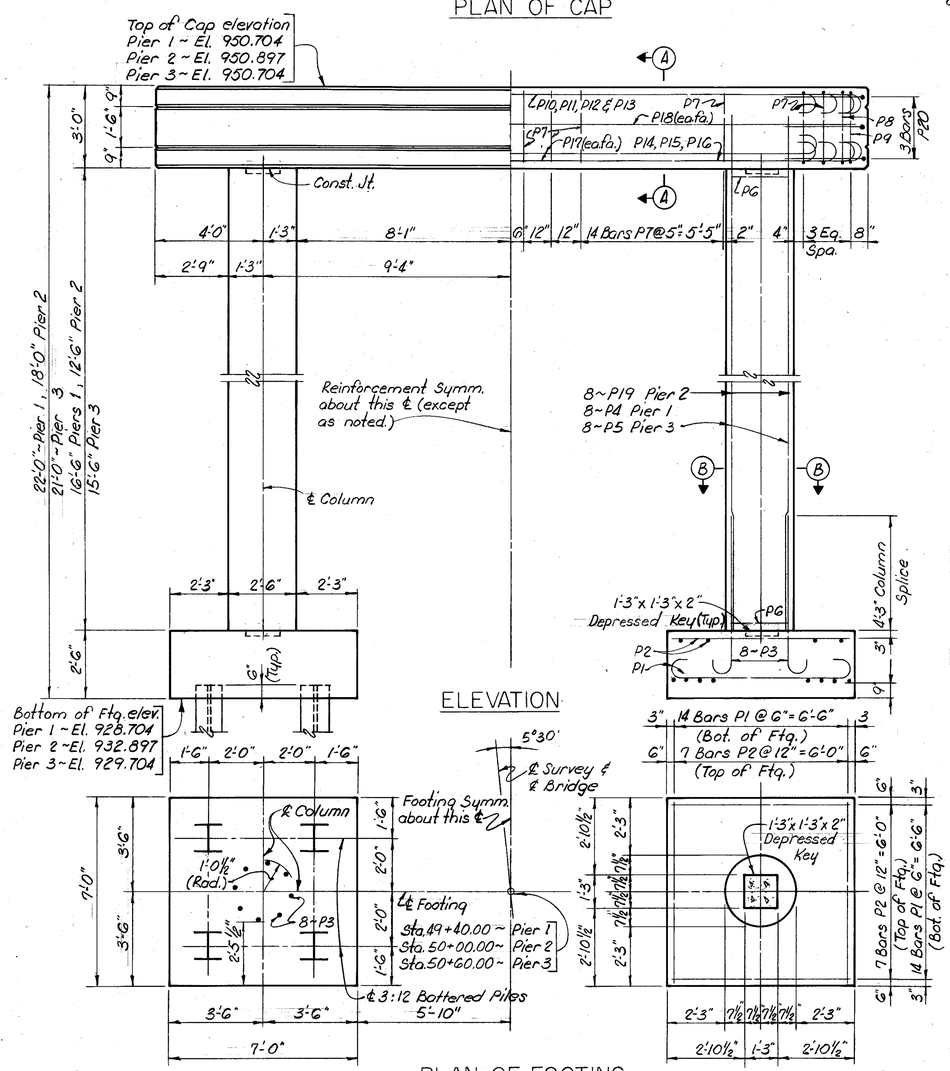

ELEVATION

PLAN OF FOOTING

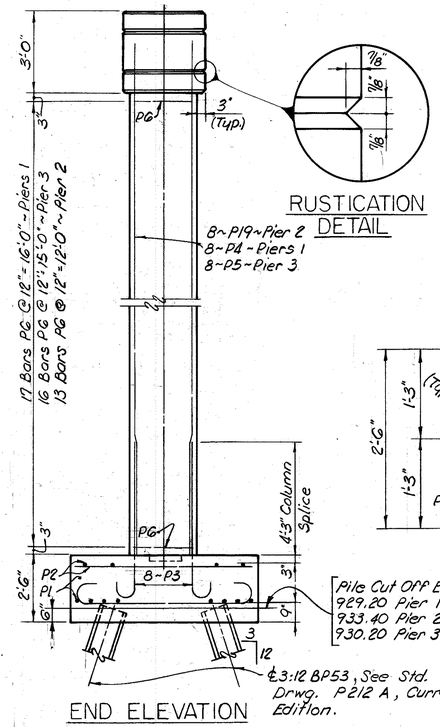

RUSTICATION DETAIL

END ELEVATION

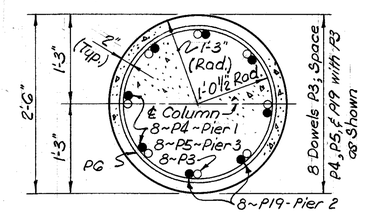

SECTION B-B

BILL OF REINFORCEMENT

MARK	TYPE	NUMBER Pier 1	NUMBER Pier 2	NUMBER Pier 3	BAR SIZE	LENGTH Ft.	LENGTH In.	LOCATION	a Ft.	a In.	b Ft.	b In.	c Ft.	c In.	d Ft.	d In.
P1	1	56	56	56	#6	8	2	Footing	6	2	1	0	0	6	6	8
P2	Str.	28	28	28	#5	6	8	"								
P3	2	16	16	16	#10	7	2	"								
P4	Str.	16	—	—	#10	18	6	Column								
P5	Str.	—	—	16	#10	17	6	"								
P6	3	34	26	32	#4	8	6	"								
P7	4	36	36	36	#6	11	5	Cap	2	8	2	8				
P8	4	2	2	2	#6	9	11	"	1	11	2	8				
P9	4	2	2	2	#6	9	11	"	1	11	2	8				
P10	1	2	2	2	#11	29	2	"	25	2	2	0	1	1 3/4	26	3 3/4
P11	1	2	2	2	#11	29	0	"	25	0	2	0	1	1 3/4	26	1 3/4
P12	1	2	2	2	#11	28	6	"	24	6	2	0	1	1 3/4	25	7 3/4
P13	1	2	2	2	#11	26	11	"	22	11	2	0	1	1 3/4	24	0 3/4
P14	1	2	2	2	#11	29	2	"	25	2	2	0	1	1 3/4	26	3 3/4
P15	1	2	2	2	#11	29	0	"	25	0	2	0	1	1 3/4	26	1 3/4
P16	1	2	2	2	#11	28	6	"	24	6	2	0	1	1 3/4	25	7 3/4
P17	1	4	4	4	#11	26	11	"	22	11	2	0	1	1 3/4	24	0 3/4
P18	Str	2	2	2	#4	23	8	"								
P19	Str.	—	16	—	#10	14	6	Column								
P20	5	6	6	6	#4	7	3	Cap								

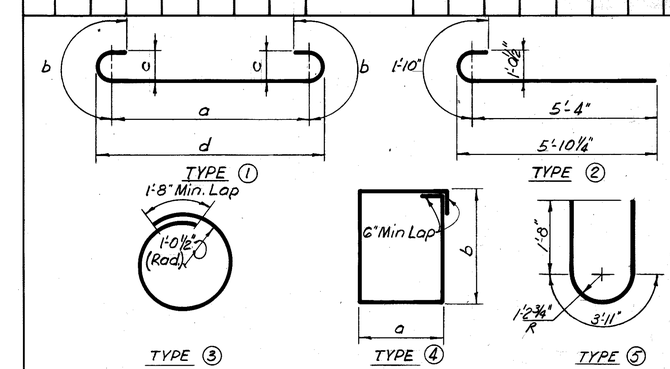

ESTIMATE OF QUANTITIES

Item / Location	Pier 1	Pier 2	Pier 3
Concrete, Class "A" (Cu. Yds.)	23.7	22.3	23.4
Steel Reinforcement (Lbs.)	6,279	5,958	6,199

PIER 1, 2 & 3

Reloc. Providence Rd. over BSP — Sheet 7

COMMONWEALTH OF KENTUCKY
DEPARTMENT OF HIGHWAYS
FRANKFORT
COUNTY OF
ADAIR

BOWLING GREEN - SOMERSET PKWY.
ROAD
STATION 4438+83.00 **P. E. PROJECT NO.**

CONSTRUCTION PROJECT NO.	MAINTENANCE PROJECT NO.	DRAWING NO.
		18164

LETTING DATE

DESIGNED BY AF — CHECKED BY DGM — DATE 11/68 — REVISED
DETAILED BY RAS — CHECKED BY DGM — DATE 11/68 — REVISED
TRACED BY — CHECKED BY — DATE — REVISED

LETTING DATE

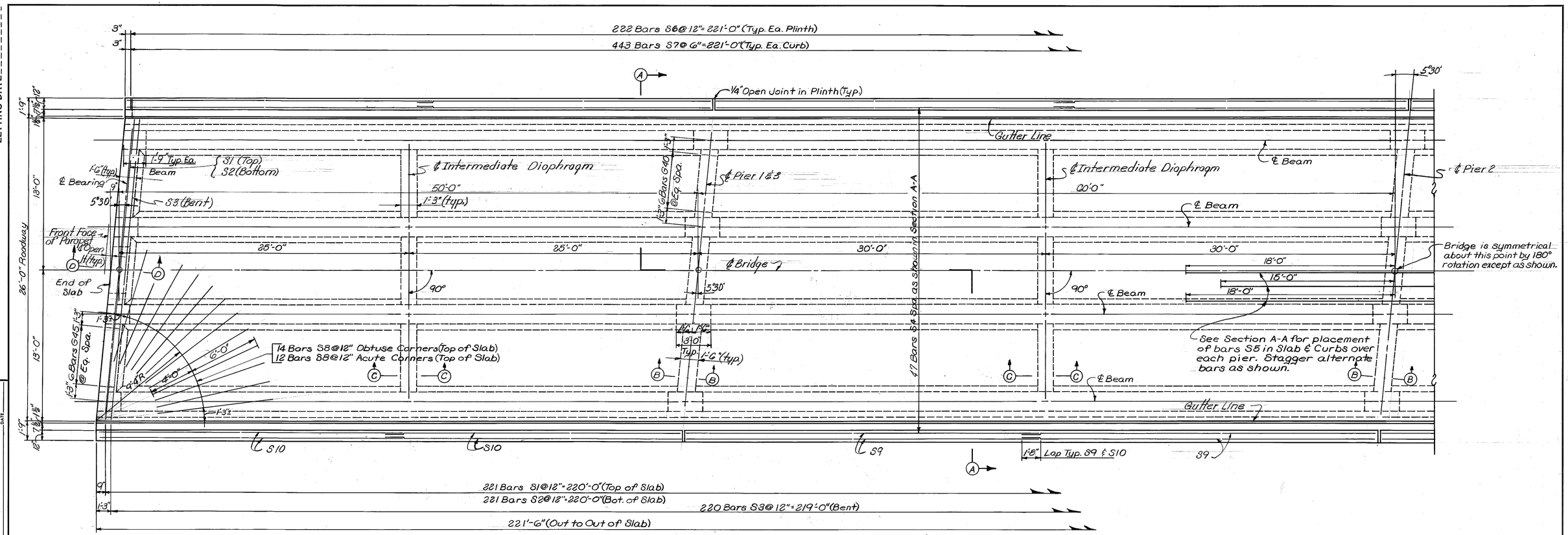

PART PLAN OF SLAB

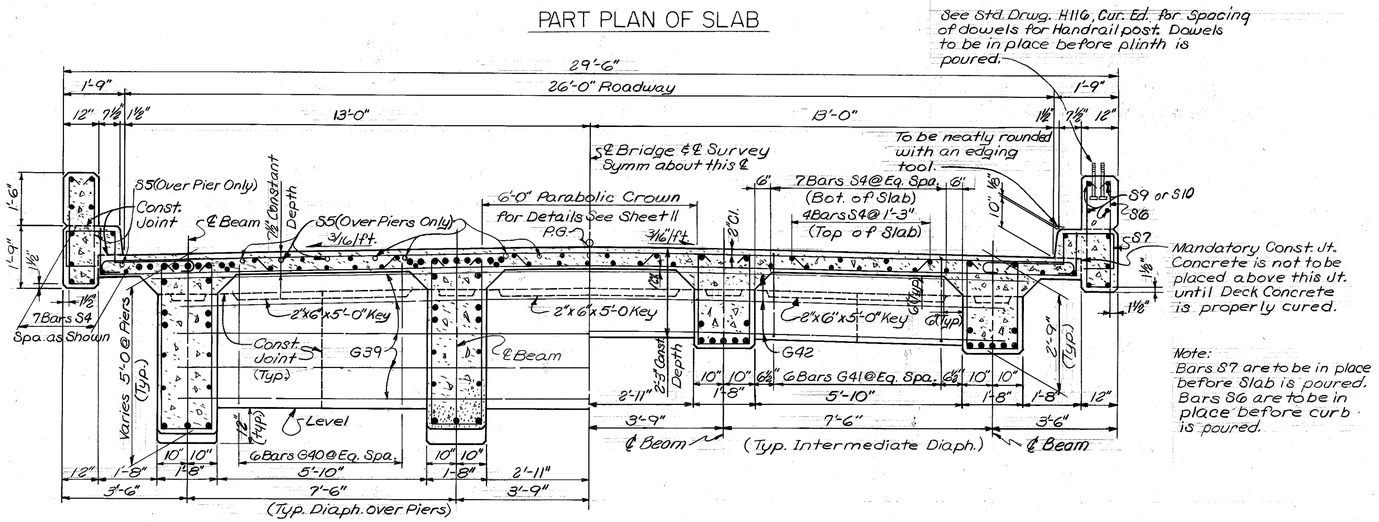

SECTION A-A

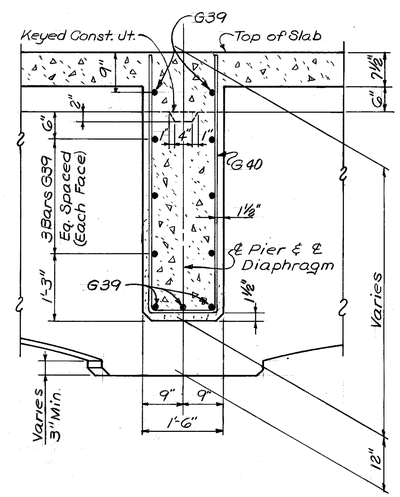

SECTION B-B

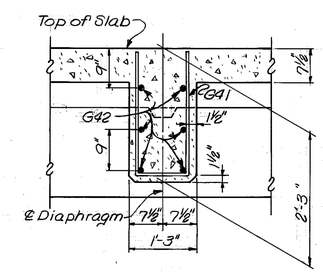

SECTION C-C

SUPERSTRUCTURE

Relocate Providence Rd. over BSP — Sheet 8

COMMONWEALTH OF KENTUCKY
DEPARTMENT OF HIGHWAYS
FRANKFORT
COUNTY OF
ADAIR
BOWLING GREEN - SOMERSET PKWY.
ROAD
STATION 4438+83.00 **P. E. PROJECT NO.**

CONSTRUCTION PROJECT NO.	MAINTENANCE PROJECT NO.	DRAWING NO.
		18164

DESIGNED BY AF — CHECKED BY — DATE
DETAILED BY UCF — CHECKED BY U.S.B. — DATE 11-69
TRACED BY — CHECKED BY U.S.B. — DATE 11-69
REVISED — DATE
REVISED — DATE
REVISED — DATE

DIETZGEN 135-3 AGEPROOF

LETTING DATE

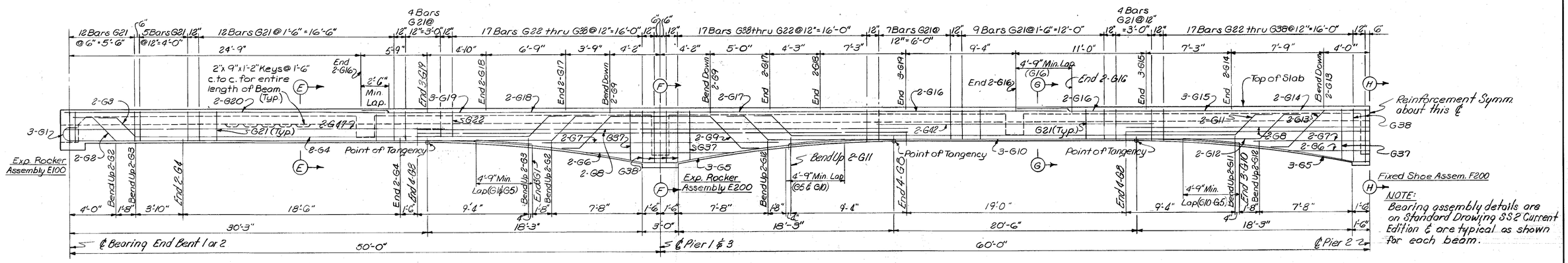

NOTE:
Bearing assembly details are on Standard Drawing SS2 Current Edition & are typical as shown for each beam.

LONGITUDINAL SECTION ON ℄ BEAMS
(Typical Each Beam)

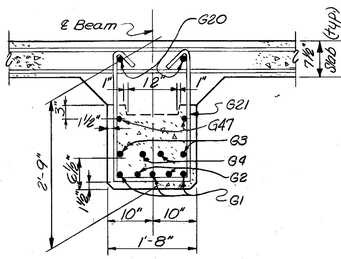

SECTION E-E

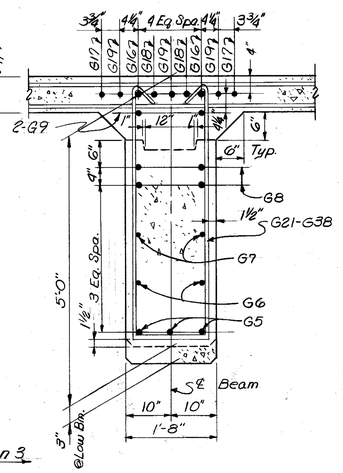

SECTION F-F

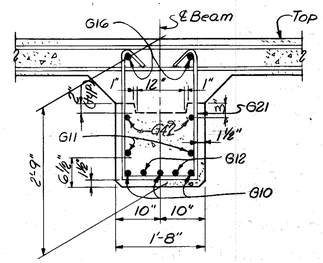

SECTION G-G

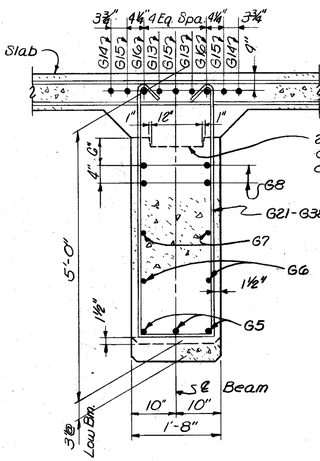

SECTION H-H

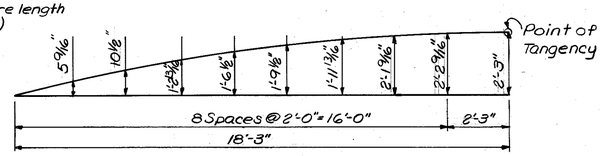

ORDINATES FOR PARABOLIC SOFFIT

TABLE OF REACTIONS						
Item	End Bent 1 & 2		Pier 1 & 3		Pier 2	
	Int. Bm.	Ext. Bm.	Int. Bm.	Ext. Bm.	Int. Bm.	Ext. Bm.
Dead Load	31.2	20.7	123.2	107.0	111.8	90.9
Live Load	30.8	27.9	50.6	45.9	50.7	46.0
Impact	8.8	8.0	14.1	12.8	13.7	12.4
Total	70.8	62.6	187.9	165.7	176.2	155.3

Note:
Dead Load includes weight of shoes. Reactions are at ℄ of bearing. Live Load and Impact are Maxima for one beam and are not substructure loads.

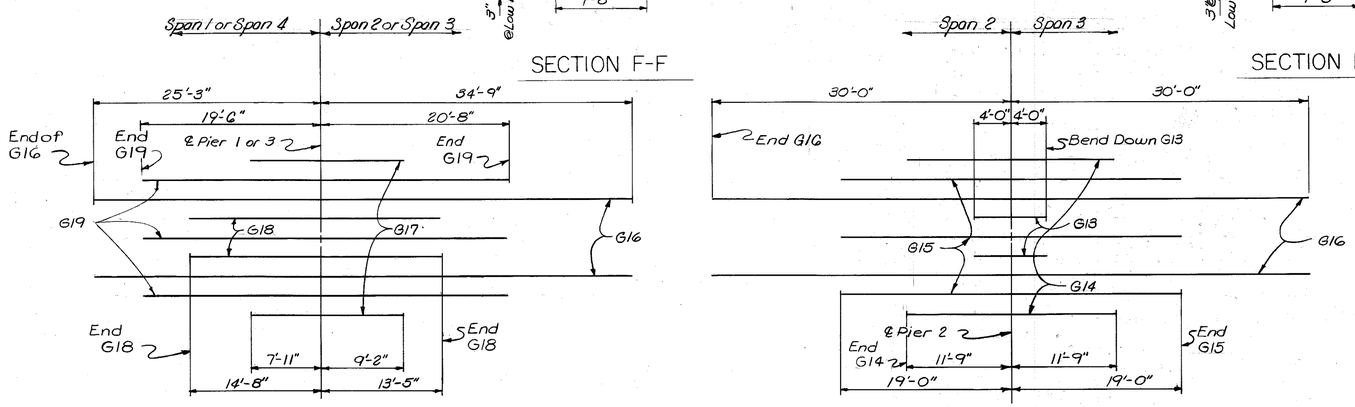

PLAN (Showing Reinforcement in Top Row @ Piers)

SUPERSTRUCTURE

Reloc. Providence Rd. over B.S.P. Sheet 9

COMMONWEALTH OF KENTUCKY
DEPARTMENT OF HIGHWAYS
FRANKFORT
COUNTY OF
ADAIR
BOWLING GREEN-SOMERSET PKWY.
ROAD
STATION 4438+83.00 **P. E. PROJECT NO.**

CONSTRUCTION PROJECT NO.	MAINTENANCE PROJECT NO.	DRAWING NO.
		18164

DESIGNED BY AF CHECKED BY DGM DATE 11-69 REVISED
DETAILED BY JCF CHECKED BY DGM DATE 11-69 REVISED
TRACED BY CHECKED BY DATE REVISED

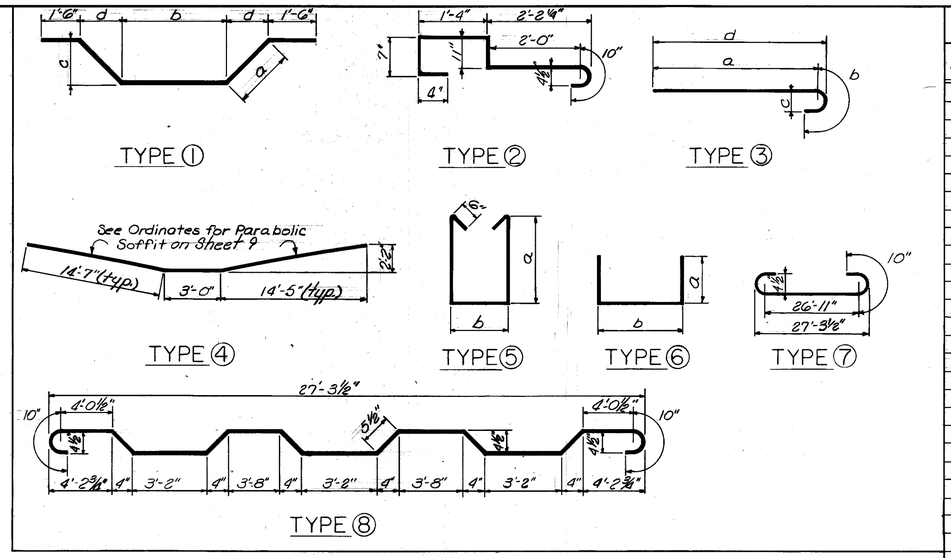

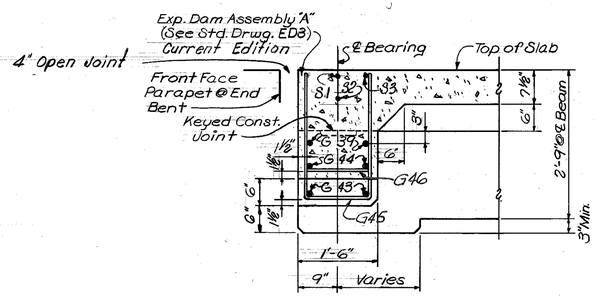

SECTION D-D

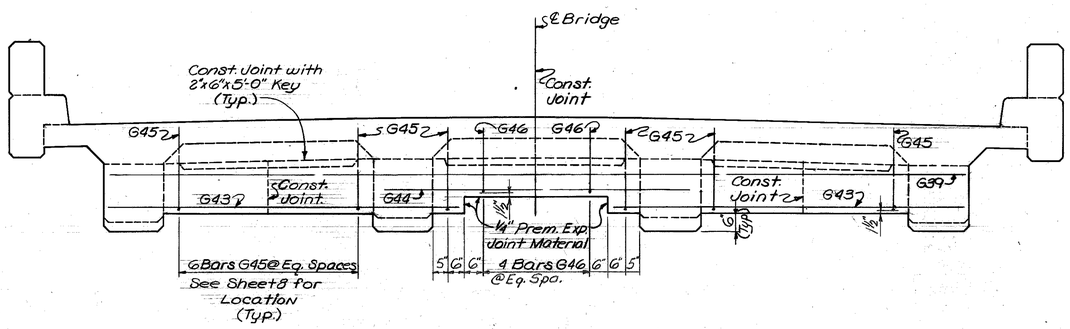

END WALL ELEVATION

BILL OF REINFORCEMENT

MARK	TYPE	NO.	BAR SIZE	LENGTH Ft.	LENGTH In.	LOCATION	a Ft.	a In.	b Ft.	b In.	c Ft.	c In.	d Ft.	d In.
G1	③	24	#11	41	0	Beams	39	0	2	0	1	1¾	39	6⅞
G2	①	16	#11	45	10	"	3	0	36	10	2	3	2	1⅜
G3	①	16	#11	41	2	"	2	6	33	2	1	11	1	9⅜
G4	Str.	16	#11	18	6	"								
G5	④	36	#11	32	2	"								
G6	Str.	24	#5	12	6	"								
G7	Str.	24	#5	20	0	"								
G8	Str.	48	#8	41	0	"								
G9	①	16	#11	19	0	"	3	10	8	4	2	10	2	8⅜
G10	Str.	24	#11	38	4	"								
G11	①	16	#11	45	8	"	2	6	37	8	1	11	1	9⅜
G12	①	16	#11	50	8	"	3	0	41	8	2	3	2	1⅜
G13	①	8	#11	18	8	"	3	10	8	0	2	10	2	8⅜
G14	Str.	8	#11	23	6	Beams								
G15	Str.	12	#11	38	0	"								
G16	Str.	24	#11	60	0	"								
G17	Str.	16	#11	17	1	"								
G18	Str.	16	#11	28	1	"								
G19	Str.	24	#11	40	2	"								
G20	Str.	16	#6	27	9	"								
G21	⑤	424	#5	7	1	"	2	5	1	5				
G22	⑤	24	#5	7	2	"	2	5½	1	5				
G23	⑤	24	#5	7	3	"	2	6	1	5				
G24	⑤	24	#5	7	4	"	2	6½	1	5				
G25	⑤	24	#5	7	5	"	2	7	1	5				
G26	⑤	24	#5	7	7	"	2	8	1	5				
G27	⑤	24	#5	7	10	"	2	9½	1	5				
G28	⑤	24	#5	8	0	"	2	10½	1	5				
G29	⑤	24	#5	8	3	"	3	0	1	5				
G30	⑤	24	#5	8	6	Beams	3	1½	1	5				
G31	⑤	24	#5	8	10	"	3	3½	1	5				
G32	⑤	24	#5	9	1	"	3	5	1	5				
G33	⑤	24	#5	9	5	"	3	7	1	5				
G34	⑤	24	#5	9	10	"	3	9½	1	5				
G35	⑤	24	#5	10	4	"	4	0½	1	5				
G36	⑤	24	#5	10	8	"	4	2½	1	5				
G37	⑤	24	#5	11	1	"	4	5	1	5				
G38	⑤	48	#5	11	7	Beams	4	8	1	5				
G39	Str.	37	#5	23	11	End Wall & Diaphragm @ Piers								
G40	⑥	54	#5	9	0	Diaphragm @ Pier	3	11	1	3				
G41	⑥	72	#5	4	7	Inter. Diaphragm	1	10	1	0				
G42	Str.	40	#5	23	6	Inter. Dia. & Beam								
G43	Str.	8	#5	9	10	End Wall								
G44	Str.	4	#5	8	7	End Wall								
G45	⑥	28	#5	5	6	End Wall	2	2	1	3				
G46	⑥	8	#5	4	6	End Wall	1	8	1	3				
G47	Str.	16	#5	32	4	Beam								
S1	⑦	221	#5	28	7	Slab								
S2	⑥	221	#5	29	6	Slab	1	2	27	3				
S3	⑧	220	#5	29	4	Slab								
S4	Str.	282	#5	38	8	Slab								
S5	Str.	57	#8	33	0	Slab								
S6	⑤	444	#5	7	7	Plinth	3	0	0	9				
S7	②	886	#5	5	11	Curb								
S8	Str.	52	#6	10	0	Slab								
S9	Str.	32	#4	30	9	Plinth								
S10	Str.	32	#4	26	1	Plinth								

ESTIMATE OF QUANTITIES	
Item	
Concrete, Class "AA"	373.8 (Cu. Yds.)
Steel Reinforcement	120,884 (Lbs.)

SUPERSTRUCTURE

Reloc. Providence Road over B.S.P. Sheet 10

COMMONWEALTH OF KENTUCKY
DEPARTMENT OF HIGHWAYS
FRANKFORT
COUNTY OF
ADAIR
BOWLING GREEN - SOMERSET PKWY.
ROAD
STATION 44+38+83.00 **P. E. PROJECT NO.**

CONSTRUCTION PROJECT NO.	MAINTENANCE PROJECT NO.	DRAWING NO.
		18164

LETTING DATE

DESIGNED BY AF CHECKED BY DGM DATE 11-69 REVISED
DETAILED BY JCF CHECKED BY DGM DATE 11-69 REVISED
TRACED BY CHECKED BY DATE REVISED

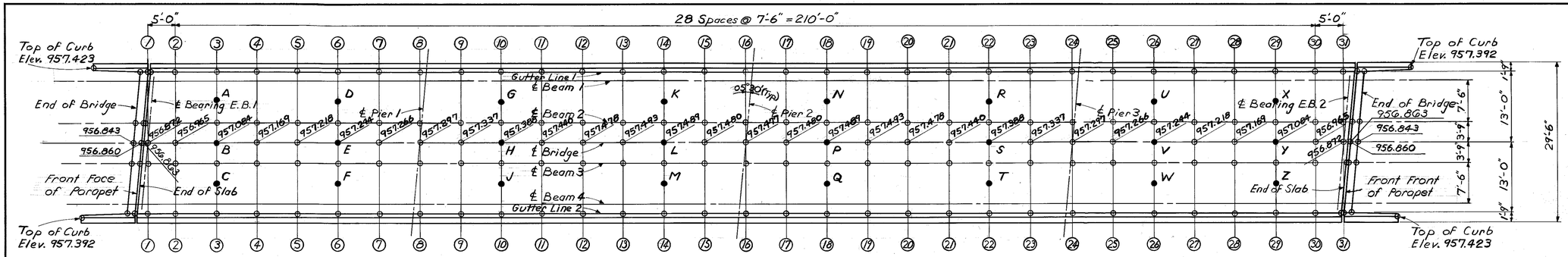

PLAN

(Showing points where elevations are given)

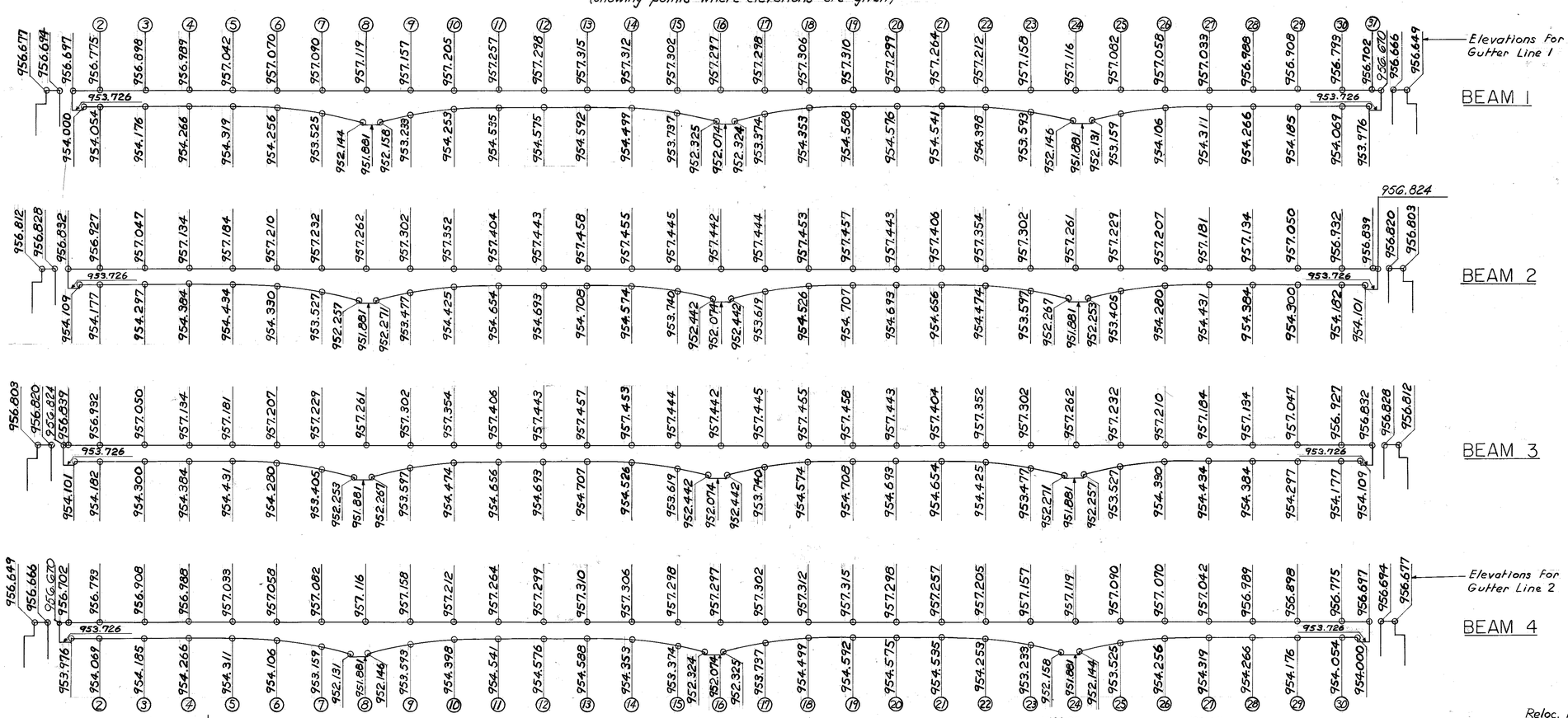

SECTIONS ON ℄ BEAMS

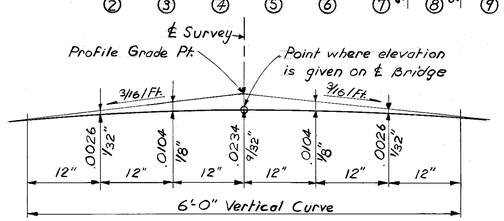

PARABOLIC CROWN DETAIL

Note: Elevations shown on this sheet include dead load camber and are to be maintained with falsework in place.

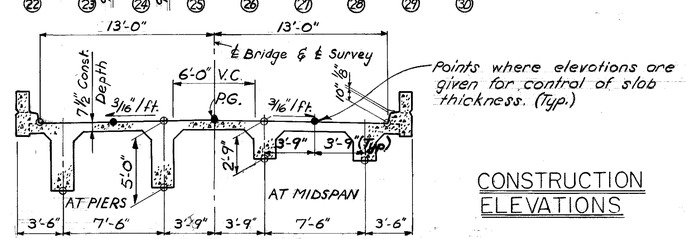

TYPICAL SECTION THRU DECK

CONSTRUCTION ELEVATIONS

TABLE OF ELEVATIONS FOR CONTROL OF SLAB THICKNESS			
Pt.	Plan Elev. Top of Slab	Field Elev. Bot. of Slab	Computed Slab Thickness
A	956.987	6.307	.680
B	957.084	6.358	.726
C	956.992	6.332	.660
D	957.153	6.492	.661
E	957.244	6.543	.701
F	957.146	6.492	.654
G	957.292	6.627	.665
H	957.388	6.689	.699
J	957.296	6.650	.646
K	957.397	6.731	.666
L	957.489	6.773	.716
M	957.393	6.734	.659
N	957.393	6.705	.688
P	957.489	6.782	.707
Q	957.397	6.725	.672
R	957.296	6.632	.664
S	957.388	6.689	.699
T	957.292	6.632	.660
U	957.146	6.489	.657
V	957.244	6.548	.696
W	957.153	6.494	.659
X	956.992	6.330	.662
Y	957.084	6.387	.697
Z	956.987	6.320	.667

NOTE: AFTER THE SLAB FORMS ARE ERECTED AND BEFORE THE SLAB REINFORCEMENT IS PLACED, THE RESIDENT ENGINEER SHALL TAKE FIELD ELEVATIONS AT THE SLAB THICKNESS CHECK POINTS AND ENTER THEM IN THE TABLE IN THE SPACE PROVIDED. THE SLAB THICKNESS SHALL THEN BE COMPUTED. IF THE COMPUTED SLAB THICKNESS VARIES MORE THAN 1/4" FROM THE PLAN THICKNESS, ALLOWING 1/360 OF THE SLAB SPAN FOR DEFLECTION OF THE FORM WORK, THE FORM SHALL BE ADJUSTED UNTIL THE COMPUTED SLAB THICKNESS IS WITHIN THE TOLERANCE ALLOWED.

Reloc. Providence Rd. over B.S.P. — Sheet 11

COMMONWEALTH OF KENTUCKY
DEPARTMENT OF HIGHWAYS
FRANKFORT
COUNTY OF
ADAIR
BOWLING GREEN - SOMERSET PKWY.
ROAD
STATION 4438+83.00 **P. E. PROJECT NO.**

CONSTRUCTION PROJECT NO.	MAINTENANCE PROJECT NO.	DRAWING NO.
		18164

LETTING DATE

DESIGNED BY PAP CHECKED BY DGM DATE 11/69 REVISED
DETAILED BY ATB CHECKED BY DGM DATE 11/69 REVISED
TRACED BY CHECKED BY DATE REVISED

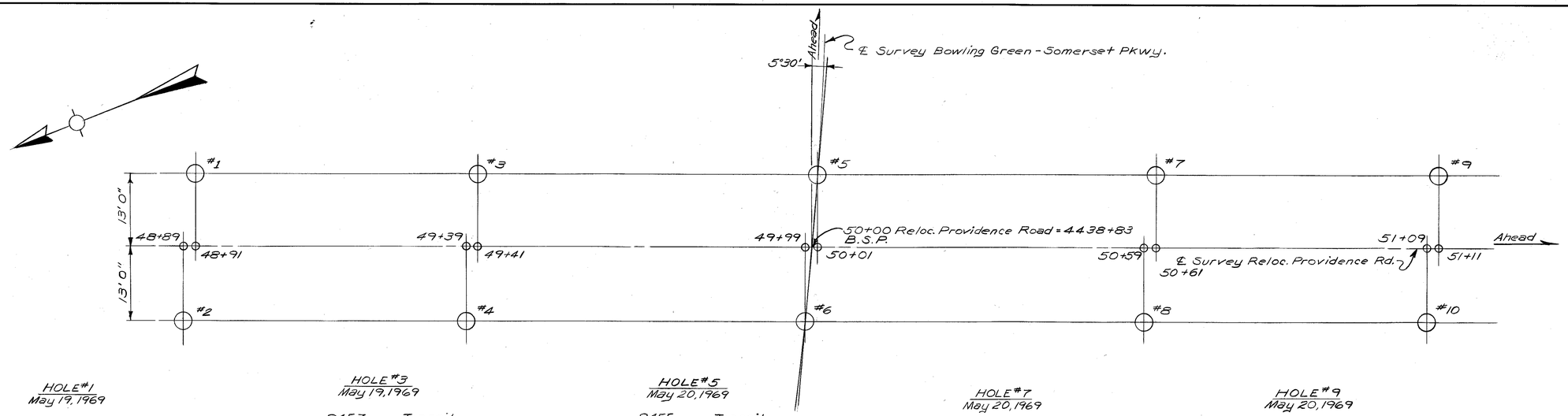

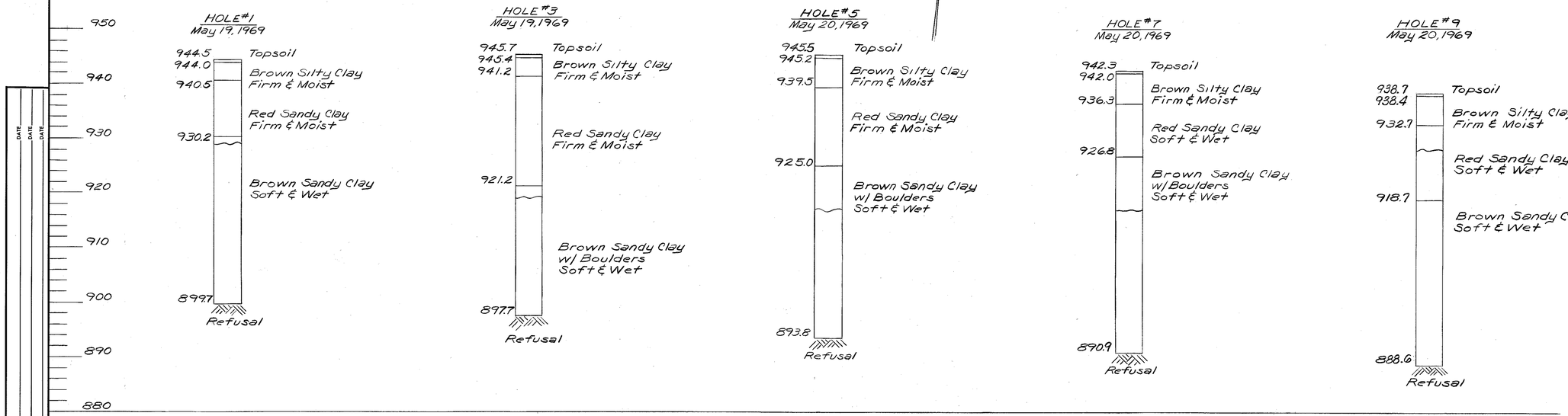

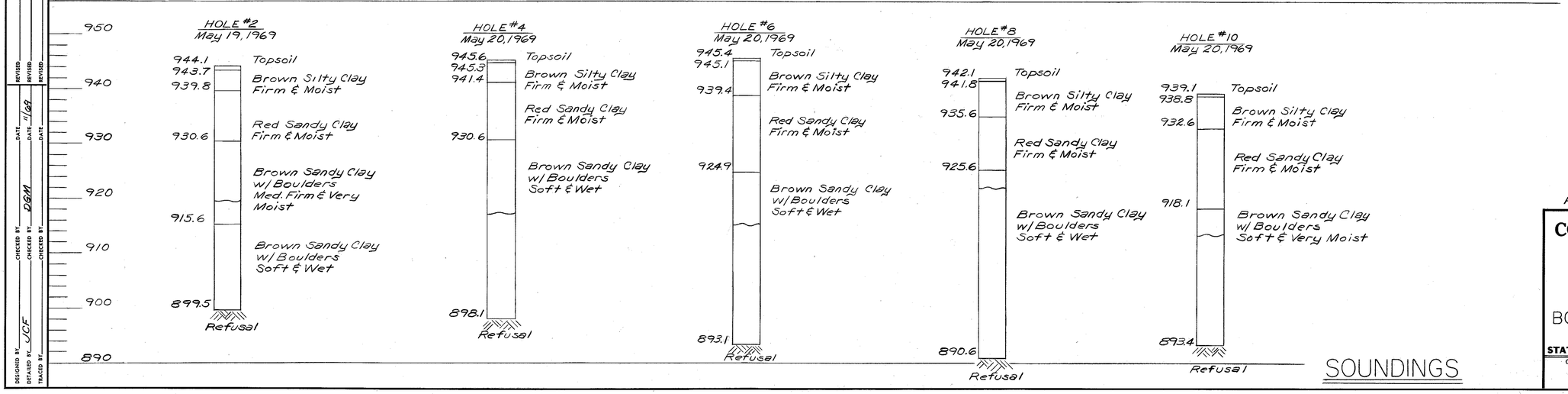

Auger To Solid Rock

Indicates Ground Water

SOUNDINGS

Sheet 12

Relocated Providence Rd. Over B.S.P.

COMMONWEALTH OF KENTUCKY
DEPARTMENT OF HIGHWAYS
FRANKFORT
COUNTY OF
ADAIR

BOWLING GREEN - SOMERSET PKWY.
ROAD

STATION 4438+83.00 **P. E. PROJECT NO.**

CONSTRUCTION PROJECT NO.	MAINTENANCE PROJECT NO.	DRAWING NO.
		18164

LETTING DATE

DESIGNED BY: JCF CHECKED BY: DGM DATE 1/69 REVISED
DETAILED BY: CHECKED BY: DATE REVISED
TRACED BY: CHECKED BY: DATE REVISED